COMBAT ENGINEER NCO

NOVEMBER 2000

MARINE CORPS ENGINEER SCHOOL
MARINE . CORPS BASE .
CAMP LEJEUNE, NORTH CAROLINA

UNITED STATES MARINE CORPS

COMBAT ENGINEER INSTRUCTION COMPANY
MARINE CORPS ENGINEER SCHOOL
CAMP LEJEUNE, NORTH CAROLINA 28542-0069

C23A01
5 Jun 00
(95 POI)

STUDENT OUTLINE

TECHNICAL PUBLICATIONS

1. ENAB**LING LEARNING OBJECTIVES:**

a. Given a Technical Manual and references utilize the technical manual numbering system to identify the five elements of a publication designator per the references. (1371.5.1a)

b. Given an SL-3 and references, utilize the publication numbering system to identify the three elements of the publication designator per the references. (1371.5.1b)

c. Given federal logistics system, an NSN and references, conduct a search to identify the unit price, source of supply and ID number per the references. (1371.5.1c)

OUTLINE

1. TYPES OF PUBLICATIONS:

(REF: MCO P4790.2C PG. B-1)

a. Technical Manuals (TM) furnish technical information, instructions, and procedures of a permanent nature on the operation, maintenance, and handling of equipment or material.

b. Stock Lists (SL) provide all levels of the Marine Corps supply and maintenance operations with essential, up to date information for Marine Corps-managed items.

c. Modification Instructions (MI) authorize the modification of equipment or material and furnish technical instructions on how to accomplish the modification.

d. Technical Instructions (TI) furnish technical advice or information on equipment or material.

e. Lubrications Instructions (LI) Lubrication Orders (LO) furnish technical information and instructions on the service, lubrication, and related preventive maintenance checks and services requirements for equipment or materiel.

f. Users Manual (UM) provide procedures for formatting and entering information into the AIS.

g. Marine Corps Orders (MCO) are directives that are permanent in nature.

h. Marine Corps Bulletins (MCBul) are temporary in nature.

2. TECHNICAL MANUAL (TM):

a. The TM contains description of the equipment, illustrated parts breakdown, and operational and maintenance instructions for a specific item of equipment. Some information found in the TM is, but not limited to, as follows: (MCO P5215.17)

(1) General Description - Machine options, uses limitations, safety, dimensions, and specifications are also furnished. Marine Corps registration numbers are sometimes shown.

(2) Preparation for Use - This instruction applies to new service ready machines that are not preserved prior to transport. Refer to certain paragraphs and safety section of the manual before attempting to operate a preserved machine.

(3) Demolition to prevent enemy use - When captured or abandonment to an enemy is imminent, the responsible unit commander must make the decision to either destroy or render equipment inoperative. Examples:

(a) Explosives and weapons fires are effective, and the preferred methods.

(b) Disable mechanically using sledge hammers, picks, axes etc.

(c) Scattering and concealment - move easy accessible vital parts.

(d) Submerge totally under water to damage components and systems if possible.

(4) Theory of Operation - Usually focuses on two main systems: the electrical and mechanical systems.

(5) Controls and Instruments - This section describes, locates, illustrates and furnishes operators and maintenance personnel with information pertaining to the various controls and instruments provided for proper operation.

(6) Maintenance Instructions - Preventive maintenance is routine, precautionary care taken to minimize wear on unexpected breakdown and is performed on a scheduled basis.

(7) Preventive Maintenance Schedule - This section has hourly intervals provided to the operator and maintenance personnel. It also

provides copies of the lubrication instruction to ensure the use of proper lubricants.

b. Technical Manual Numbering System (Marine Corps) - The numbers assigned to a technical manual may consist of as many as five elements.

(1) Item Designation (ID) Number - Consist of five digits suffixed by a letter of the alphabet (excluding O and I) is assigned to a system, major item, or multiple - use major components. (Example TM - 06709A-15)

(2) Model - When publication covers more than one model of the same equipment, the suffix letter is dropped and specific models are listed on the cover of the manual. (Example TM - 06709A-15)

(3) Maintenance Echelon Number - Information number provided to show the user who is responsible for performing the maintenance tasks. (TM-06709A-15)

(4) Sequence Number - Follows the basic number or maintenance echelon indicator, as appropriate. A virgule (/) separates the sequence number from the preceding element. It indicates a manual as being one of a series for a specific piece of equipment. (Example TM-4700-15/1_)

(5) Edition Designate - An alphabetic character, starting with capital suffix "A" that indicates each revision of a technical publication after its initial printing. (Example TM-4700-15/1_)

Examples: TM -06709A (Marine Corps)

3. <u>SL-3 (COMPONENTS LIST):</u> An SL-3 lists all components of collection-type items, such as chests, sets, kits, outfits and assortments, and components to such principal items as vehicles, weapons, and communications equipment.

a. Purpose - To provide a list of components and accessories needed to make an item complete. The SL-3 is primarily used for inventory purposes and will contain the following information:

b. The Cover Page provides -

(1) Date of Publication (month and year)

(2) Short Title

EXAMPLE: SL-3-08580A

SL - Type of Publication (Stock List)
3 - Designates classification of manual (Components)
08580 - Equipment Item Designator (ID)
A - Equipment model number

(3) Publication Control Number (PCN)

EXAMPLE: PCN 123 085800 00

123 - Prefix Number, categorizes publication in series (123: series SL-3, title MCSL Components List)
085800 - Equipment Item Designator (ID)
00 - Use to designate basic publication
01 – would designate change one to publication

(4) Table of Authorized Materiel Control Number (TAMCN). Consists of type and technical category of materiel, item number, and class of supply.

EXAMPLE: B2604

B - Commodity Designators, type and technical category of materiel. (B - Engineer)
2604 - Item Number

(5) Long Title/Mode: The full description of the item.

EXAMPLE: Water Purification Unit Reverse Osmosis 600 GPM, Frame Mounted

(6) National Stock Number (NSN)

EXAMPLE: NSN 4610-01-113-8651

4610 - Federal Supply Classification (FSC)
01 - National Codification Bureau Code (Country Code)
113-8651 - National Item Identification Number (NIIN)

c. Preface - This section contains instructions for using the manual and also provides definitions for other information found in this manual.

d. Scope - Provides general information pertaining to components and accessories of collection-type supply items. Such as major combinations, systems, groups, outfits, kits, sets, or assortments.

e. Components List - This section contains a listing of the components required to make the end item complete and provides the following information on each of these items.

f. Item Number - This column specifies a number assigned to each item as it appears in the list. Numbers are assigned in sequence and are for reference purposes only.

g. Stock Number - This column furnishes the National Stock Number (NSN) assigned to the item.

h. Reference Designator/Figure Key - This column contains alphabetical and/or numerical designators for referencing an individual component or item

to an illustration. The absence of a reference designator indicates there is no illustration for the item.

i. Model - This column indicates in alphabetical code the specific application of components or assemblies when more then one model of the end item is contained in this publication.

j. Item Identification - This column provides the item name and description listed under the heading of either "SUPPLY SYSTEM RESPONSIBILITY", "COLLATERAL MATERIAL" or "USING UNIT RESPONSIBILITY."

(1) Supply System Responsibility - Items listed under this heading are furnished by the supply system when the end item is issued and will be transferred within the end item during redistribution or other changes of custody unless otherwise specifically directed by appropriate authority. These items are required to be maintained on hand or on order, unless otherwise specifically directed within the SL-3.

(2) Collateral Material - A list, in alphabetical sequence, of items that are supplied with the initial issue of the item and that are retained by the unit. The "9999-00-000-0000" NSN shown under the beading of "COLLATERAL MATERIEL" is for control within the distribution system only, and is not authorized for requisitioning purposes.

(3) Using Unit Responsibility - A list, in alphabetical sequence, of items that will not be issued with the end item. They must be requisitioned, as required, through the supply system by the using unit or holding organization.

k. Unit of Measure - This column gives the measurement standard of each item. It may or may not be the same as the unit of issue.

l. Quantity Used in Unit - This column lists the total quantity of an item, according to the unit of measure, required for full functional operation of the end item.

m. 5th Echelon Rehabilitation Program - Major items returned under this program will be evacuated under the provision(s) of the applicable Marine Corps Order(s) with the items listed under Supply System Responsibility. Rebuild and replacement under a 5th Echelon rehabilitation program will be limited to these items only. Those items under the heading "COLLATERAL MATERIEL" and using unit items should be held by using organizations for application to the replacement end items.

n. Changes - Changes to this publication will be kept current by and issued as Pen Changes for minor corrections and Page Inserts for extensive changes.

o. Requisitioning of Publications - Publications stocked by the Marine Corps shall be requisitioned as set forth in the current editions of C-23A01.

(1) MCO P5600.31, Marine Corps Publications and Printing Regulations.

(2) MCO P4400.84, Marine Corps Unified Material Management Systems.

p. Publications Feedback - Technical publications play a critical role in achieving system and equipment readiness. Because of this factor, the currency and accuracy of the data published in these documents are essential. NAVMC 10772, Recommended Changes to Publications, provides a medium for acceleration information feedback to effect the necessary corrections, changes, and/or revisions, as appropriate.

q. Inventory Sheet - Used to inventory all components and accessories for collection type supply items, such as tool sets, chests, and kits.

(1) In addition, those common or special tools for which the unit commander has established allowances (because they are above T/E and special allowance requirements) must also be inventoried and contained in an inventory list.

(2) A copy of the completed inventory SL-3/SL-3 extract will be maintained in the tool kit, set or chest, or in a file folder maintained by the tool NCO/commodity manager in a secure area.

(3) The SL-3 extract is to be used for monthly inspection and may be reproduced locally by the user as required. The user may indicate in the first column the month of the first inventory. The inventory sheet may be modified for quarterly inventory. The inventory will also include an inspection for serviceability. The SL-3 extract should be so designed to include the changes and date of the SL-3.

(4) The last page of the extract should have space for the signature of the person conducting the inventory, date of the inventory, and signature of the person supervising the inventory.

(5) Copies of inventories will be maintained for 1 year.

r. Items with missing NSN's should be requisitioned by drawing and/or part number. When NSN's are assigned to these items, a change will be made to this publication.

4. <u>LOGISTICS DATA ON FED LOG SYSTEM:</u>

a. Purpose. The FED LOG is a logistics information system that allows for the retrieval of the following information:

(1) Reference Number. This screen displays MCRL information.

(2) Management. This screen provides ML-C information.

(3) Freight. This screen displays freight data for your matches.

(4) Supplier, also known as Commercial and Government Entity (CAGE). This screen displays information about commercial and government entities.

(5) Characteristics. This screen displays decoded characteristics for your selected NIIN/NSN, (IL information).

b. For searching databases, FED LOG provides three programs. You can choose the program most suited to your needs:

(1) Interactive Program. Provides on screen instructions and menus for entering a query, performing a search, viewing data and printing data.

(2) Batch Program. Also provides on screen instructions and menus, but allows you to enter multiple queries. The queries can then be run sequentially or overnight, if desired.

(3) External File Interface Program. Provides on screen instructions and menus for specifying filenames and creating layout files. Allows you to import queries from other programs, perform multiple searches, and export data consisting of selected fields for input into other programs.

c. You can search the FED LOG system using the following types of search criteria:

(1) Part Number

(2) CAGE Code

(3) National Item Identification Number; National/NATO Stock Number; Permanent System Control Number (NIIN/NSN/PSCN)

(4) Supplier Name

(5) Item Name

REFERENCES:

TM 4700-15/1H
MCO 4790.2C
MCO 4790.2B
UM 4790-5

UNITED STATES MARINE CORPS
COMBAT ENGINEER INSTRUCTION COMPANY
MARINE CORPS ENGINEER SCHOOL
PSC BOX 20069
CAMP LEJEUNE, NORTH CAROLINA 28542-0069

C-23A02
5 Jun 00
(97 POI)

STUDENT OUTLINE

RECORDS AND FORMS

1. ENABLING LEARNING OBJECTIVE (S):

(1) Given a completed Engineer Equipment Operational Record (NAVMC 10523), with the aid of references, validate the form in accordance with TM 4700-15/1H. (1371.5.1g)

(2) Given a completed Engineer Equipment Operational Record (NAVMC 10524, with the aid of references, validate the form in accordance with the TM 4700-15/1H (1371.5.1h)

(3) Given a Motor Vehicle and Engineer Equipment Record Folder NAVMC 696D, with the aid of references fill out the form in accordance with TM 4700-15/1H. (1371.5.1i)

(4) Given a list of equipment and NAVMC 11053/11054 Commodity Mangers modification and control records, with the aid of references complete the form in accordance with the TM 4700-15/1H (1371.5.1j)

OUTLINE

1. MARINE CORPS INTEGRATED MAINTENANCE MANAGEMENT SYSTEM (MIMMS).

a. MIMMS BACKGROUND. MIMMS was developed in 1970 in an effort to standardize maintenance management throughout the Marine Corps. MIMMS was implemented to produce an effective unified approach throughout the Marine Corps. MIMMS is a set of manual procedures that effect the use of personnel, money, facilities, and material as applied to the maintenance of ground equipment and its control. It is supported by an automated information system (AIS) which functions as a stand-alone class I system that interfaces with existing Marine Corps systems and programs.

b. MIMMS and MIMMS/AIS. Maintenance that applies to all command levels maintenance echelons. They provide management visibility to the user level while simultaneously collating maintenance engineering analysis (MEA) information for item management.

c. MAINTENANCE LEVELS. Maintenance is divided into field and depot level maintenance. Field and depot level maintenance are divided into maintenance categories and echelons as follows.

d. MAINTENANCE CATEGORIES. The Department of Defense (DoD) categories of maintenance production are Organizational, (First and Second Echelons), Intermediate, (Third and Fourth Echelons) and Depot maintenance (Fifth Echelon).

(1) Organizational Maintenance. That maintenance production, scheduled or unscheduled, which is the responsibility of and performed by the using unit on its table of equipment (T/E) and special allowance assigned equipment.

(2) Intermediate Maintenance. Intermediate maintenance is that performed by designated activities in direct support of using organizations.

(a) Includes calibration and repair/replacement of damaged parts, provides technical assistance, and support through a secondary repairable float and/or contact team support to the using organizations.

(b) Intermediate maintenance normally includes third and fourth echelon maintenance and in instances when supporting overflow requirements, may include second echelon as well.

(3) Depot Maintenance. That maintenance requiring major overhaul or complete rebuild of parts, subassemblies, and assemblies or end items.

(a) Including the manufacture of parts and performance of required modifications, and testing.

(b) Depot maintenance serves to support lower categories of maintenance by providing technical assistance and performing maintenance beyond their responsibility.

(c) Depot maintenance provides stocks of serviceable equipment by using more extensive repair facilities then are available in lower level maintenance activities. Fifth echelon maintenance is normally associated with this category and is scheduled to employ production and assembly line methods whenever practicable.

(d) Depot maintenance located at two places, Albany, GA, on the east coast and Barstow, CA, on the west coast.

e. MAINTENANCE ECHELONS. The Marine Corps further subdivides the maintenance categories into echelons of maintenance (EOM) to more accurately identify capabilities. In this way tasks most appropriate to the units available commodity personnel, tools, equipment, and parts can be identified.

(1) FIRST ECHELON. That maintenance performed by the user or operator of the equipment. It includes the proper care, use, operation, cleaning, preservation, lubrication, minor adjustments, minor repair, testing, and parts replacement as may be prescribed by pertinent technical publications, tools and parts allowances. There is no requirement to collect MIMMS data at first echelon.

(2) SECOND ECHELON. Second echelon maintenance is that work performed by specially trained personnel in the organization. Appropriate publications authorize the second echelon of maintenance, and skilled personnel to perform maintenance beyond the capabilities and facilities of “first echelon”.

(3) THIRD ECHELON. Third echelon maintenance is that authorized by appropriate publications to be performed by specially trained personnel either in an intermediate or organizational role.

a. Third echelon includes diagnosis and isolation of equipment/modular malfunctions; adjustment and alignment of modules using tests, measurements, and diagnostic equipment (TMDE); repair by replacement of modular components and piece parts which do not require extensive post maintenance testing or adjustments.

b. Limited repair of modular components requiring cleaning, seal replacement application of external parts, and repair kits; accomplishment of minor body work and evaluation of emissions of internal combustion engines.

(4) FOURTH ECHELON. That maintenance normally associated to semi-fixed or permanent shops of intermediate maintenance activities and frequently associated to organizational shops of units with a commodity particular mission.

a. Fourth echelon maintenance includes diagnosis, isolation, adjustment, calibration, alignment, and repair of malfunctions to the internal pieces parts level; replacement of defective modular components not authorized at lower echelons.

b. Repair of major modular components by grinding, adjusting, items such as valves, tappets, seats; replacing internal and external pieces parts to include solid state integrated circuits and printed circuit boards/cards; and performance of heavy body, hull turret, and frame repair.

(5) FIFTH ECHELON. That maintenance normally performed by depot maintenance activities and at intermediate maintenance activities when special authorization is given by the CMC (LPP).

a. It includes overhaul/rebuild of end item/modular components; repairs which exceed the capability of lower echelon units where special environmental facilities or specific tolerances are required.

b. Testing, special inspection/modification requiring extensive disassembly, or elaborate test equipment; manufacturing items not provided or available, and provision of wholesale level direct exchange support.

f. REPORTABLE EQUIPMENT. Marine Corps Automated Readiness Evaluation System (MARES) reportable equipment is defined as an item of equipment which is contained in a Marine Corps bulletin (MCBul) in the 3000 series. Before items can be included in this Bulletin, they must be principal end items that are 85 percent fielded Marine Corps-wide, to include the Reserves.

g. POLICIES OF MAINTENANCE. MCO P4790.2C establishes MIMMS and maintenance production policy. The following are excerpts of the policies concerning organizational and intermediate maintenance.

(1) The commander is responsible for the successful accomplishment of the maintenance functions within the unit. The planning directing, and controlling of the maintenance operations will receive the personal attention of commanders at all levels.

(2) A commander is responsible for the operational readiness of T/E items and for maintaining T/E items within the units authorized EOM. The units authorized level of maintenance is normally stated in the logistics capability statement of the unit table of organization (T/O). MCO P4790.2c. Request to exceed that authority must be similarly based and may be granted only per the provisions of MCO P4790.2.

2. NAVMC 10524, CONSOLIDATED ENGINEER EQUIPMENT OPERATIONAL LOG AND SERVICE RECORD.

a. Purpose.

(1) The NAVMC 10524 provides the authority for an operator to operate engineer equipment on an assigned mission. A duplicate NAVMC 10524 may be prepared and issued to the operator instead of a daily NAVMC 10523 (Engineer Equipment Operational Record) when equipment is operated at a project site for extended periods - for example, well drill, generator, air compressor.

(2) The NAVMC 10524 provides the operator with checklist for conducting BEFORE, DURING, and AFTER preventive maintenance checks and services (PMCS) checklist.

(3) The NAVMC 10524 provides a means for recording mileage and hours for equipment operation so that PMCS may be scheduled and petroleum, oil, and lubrication (POL) consumption determined.

(4) The NAVMC 10524 provides a template for indicating required operator daily PMCS listed on the NAVMC 10523.

(5) The NAVMC 10524 need not be prepared on equipment when an ERO/SRO has been submitted and equipment is operated from local equipment pool area to the maintenance shop.

b. Responsibilities.

(1) The dispatcher maintains the NAVMC 10524. It must be kept up-to-date so that the scheduled PMCS is performed when due.

(2) The dispatcher will ensure the following:

(a) The request for the assigned mission is authorized.

(b) The operator has a valid operator’s license (OF-346).

(c) Section “A” is updated with any second echelon of maintenance or higher PMCS due on the equipment is indicated on the NAVMC 10524. Leave this section blank when the equipment does not have an equipment operational time indicator.

(d) The NAVMC 10031 (Daily Dispatching Record of Vehicles) is updated with applicable data from the NAVMC 10524.

(e) The equipment officer or chief is notified, when the NAVMC 10524 indicates that the equipment requires corrective maintenance.

(f) The equipment officer or chief is notified, when the NAVMC 10524 indicates that the equipment requires PMCS.

(g) The NAVMC 10524 is updated after receipt of the completed NAVMC 10523 (Consolidated Engineer Equipment Operation Log and Service Record).

(h) The required BEFORE, DURING, and AFTER operation PMCS are indicated on the DAILY PREVENTIVE MAINTENANCE SERVICES side. The dispatcher is not required to schedule 8 or 10 hour PMCS, recommended by the manufacture in the TM.

(3) The equipment chief will ensure the following:

(a) Section “A” is updated after completion of a second echelon of maintenance or higher scheduled or unscheduled PMCS.

(b) NAVMC 10561, Preventive Maintenance Checks and Services Roster is updated after completion of a second echelon of maintenance or higher scheduled or unscheduled PMCS.

(c) Any required PMCS is accomplished before the equipment is dispatched.

(d) Any required corrective maintenance is accomplished before the equipment is dispatched.

(4) The operator will ensure the following:

(a) Blocks pertaining to operation and maintenance of the equipment while it is under the operator’s control are complete before the returning the equipment to the equipment pool.

(b) Blocks pertaining to daily PMCS are complete before the returning the equipment to the equipment pool. The operator will treat and conduct 8 or 10 PMCS, recommended by the manufacture in the TM, as daily PMCS.

c. Preparation Instruction. The NAVMC 10524 is maintained for engineer equipment and is completed as follows:

(1) Section “A”

(a) The dispatcher completes line 1 as follows:

1 In the EQUIPMENT NOMENCLATURE block, enter the equipment's nomenclature.

2 In the ID NO block, enter the equipment's ID number.

3 In the USMC OR SERIAL NO. block, enter the equipment USMC or serial number.

4 In the DATE RECORD OPENED block, enter the date the record was opened.

5 In the DATE RECORD CLOSED block, enter the date the record was closed.

6 In the CONTROL NO OR UNIT block, enter the unit Activity Address Code.

(b) The dispatcher completes line 2 as follows:

1 In the REFERENCES: OPERATION/MAINTENANCE-TM block, enter the short title for the equipment's appropriate technical manual.

2 In the PARTS-SL-4: block, enter the short title for the equipment's appropriate SL-4.

(c) The dispatcher completes line 3 in pencil for second echelon of maintenance and higher hourly PMCS intervals per the commodity section of this Manual.

(d) The dispatcher completes line 4 in ink with any second echelon of maintenance and higher hourly PMCS DUE.

(2) Section "B" is optional except in instances when equipment is operated at an isolated job site for an extended period. The Major Subordinate commands maintenance management or commodity standing operating procedure will state the requirements for using Section "B". When Section "B" is required use of NAVMC 10523 is optional. When using Section "B" completed it as follows:

(a) Each time the equipment leaves the equipment pool, the equipment operator enters the following:

1 In the DATE column, enter the date the equipment is operated.

2 In the SPEEDOMETER OR HOURMETER STARTED AND STOPPED column, enter reading from the equipment's equipment operational time indicator. Leave this column blank when the equipment does not have an equipment operational time indicator.

3 In the TOTAL HR/MI. OPER column, enter the total hours or miles operated. This is the SPEEDOMETER OR HOURMETER STARTED minus the SPEEDOMETER OR HOURMETER STOPPED. When the equipment does not have an

equipment operational time indicator this block will equal total time on dispatch.

4 In the POL CONSUMPTION column, enter all POL used.

(b) Each time a second echelon of maintenance scheduled or unscheduled PMCS is completed, the equipment chief will ensure that the following:

1 The PMCS DUE column, enter hours/miles that second echelon of maintenance or higher PMCS was completed and that the next hours/miles PMCS are calculate, and the new PMCS hours/miles entered in the PMCS DUE block of Section “A”. Compute second echelon of maintenance and higher hourly PMCS per the commodity section of this Manual. Leave this column blank when the equipment does not have and equipment operational time indicator.

2 The HR/MI PMCS COMPLETED column is updated with the hours/miles the PMCS was completed. Leave this column blank when the equipment does not have an equipment operational time indicator.

3 The ERO NO. column is updated with the ERO/SRO number used to perform the second echelon of maintenance and higher PMCS was complete.

4 The UNIT column is updated with the maintenance sections unit Activity Address Code is entered when second echelon of maintenance and higher PMCS was complete. This column is optional when the unit performing the PMCS is also the equipment owner.

5 The SIGNATURE column signed by the equipment officer, chief, or foreman.

(c) Before dispatching any item of equipment, the dispatcher reviews the NAVMC 10524 to determine whether any second echelon of maintenance and higher PMCS are due on the equipment. When the oil change, lubrication service, or any PMCS is due, the dispatcher makes the appropriate entries on the NAVMC 10523 (Engineer Equipment Operational Record) and notifies the equipment chief who will ensure accomplishment of the required PMCS before the equipment leaves the equipment pool.

(3) The operator completes the DAILY PREVENTIVE MAINTENANCE Section and initials the PMCS COMPLETED column, verifying that completion of daily PMCS.

d. Filing and Disposition. File the NAVMC 10524 in the NAVMC 696D (Motor Vehicle and Engineer Equipment Record Folder). When the sheet is filled, the accumulated totals and other data are transferred to a new NAVMC 10524. Retain only the last completed or filled NAVMC 10524.

3. NAVMC 10523, ENGINEER EQUIPMENT OPERATIONAL RECORD.

a. Purpose:

(1) The NAVMC 10523 provides the authority for an operator to operate engineer equipment on an assigned mission. NAVMC 10524 (Engineer Equipment Operation Log and Service Record) may be prepared and issued to the operator instead of a daily NAVMC 10523 when equipment is operated at a project site for extended periods; for example, well drill, generator, air compressor.

(2) The NAMMC 10523 provides the operator with checklists for conducting daily preventive maintenance checks and services (PMCS) checklists.

(3) The NAVMC 10523 provides a means for recording mileage and hours for equipment operation so that PMCS may be scheduled and petroleum, oil, and lubrications (POL) consumption determined.

(4) The NAVMC 10523 need not e prepared on equipment when an ERO/SRO has been submitted and equipment is operated from local equipment pool area to the maintenance shop.

b. Responsibilities

(1) The dispatcher maintains the NAVMC 10523. It must be kept up-to-date so that the scheduled PMCS is performed when due.

(2) The dispatcher will ensure the following:

(a) The request for the assigned mission is authorized.

(b) The operator possesses a valid operator’s license (OD-346).

(c) The NAVMC 10523 is updated with any PMCS due.

(d) The NAVMC 10031 (Daily Dispatching Record of Vehicles) is updated with applicable data from the NAVMC 10523.

(e) The equipment officer or chief is notified, when the NAVMC 10523 indicates that the equipment requires corrective maintenance.

(f) The equipment officer or chief is notified, when the NAVMC 10523 indicates that the equipment requires PMCS.

(g) The oil change or lubrication service due on the equipment is indicated on the NAVMC 10523. This is not required when the equipment is enrolled in an oil analysis program or the equipment does not have an equipment operational time indicator.

(h) The second echelon of maintenance or higher PMCS due on the equipment is indicated on the NAVMC 10523. Leave this field blank when the equipment does not have an equipment operational time indicator.

(i) The NAVMC 10524 (Consolidated Engineer Equipment Operation Log and Service Record) is updated after receipt of the completed NAVMC 10523.

(j) The required daily PMCS are indicated on the DAILY “A” PM SERVICE side as indicated on the NAVMC 10524. The dispatcher is not required to schedule 8 or 10 hour PMCS.

(k) The completed NAVMC 10523 is forwarded to the equipment officer, chief, or foreman for signature in the “Equipment Foreman’s Signature” block.

(3) The equipment chief will ensure the following:

(a) Any required PMCS is accomplished before the equipment is dispatched.

(b) Any required corrective maintenance is accomplished before the equipment is dispatched.

(4) The operator will ensure the following:

(a) Blocks pertaining to operation and maintenance of the equipment while the equipment is under the operator’s control are complete before the returning the equipment to the equipment pool.

(b) Blocks pertaining to daily PMCS are complete as indicated on NAVMC 10523 (Engineer Equipment Operational Record) and in the appropriate TM. The operator will treat and conduct 8 to 10 hours PMCS, recommended by the manufacture in the TM, as daily PMCS.

(c) The completed NAVMC 10523 is forwarded to the dispatcher.

c. Preparation Instructions for Tactical Equipment. The 2ND operator block is not required unless the equipment is dispatched a second time. Complete the NAVMC 10523 as follows:

(1) The dispatcher enters the following:

(a) In the DATE block, the dispatcher enters the date the equipment is dispatched.

(b) In the EQUIPMENT block, the dispatcher enters the equipment’s nomenclature.

(c) In the USMC OR SERIAL NO block, the dispatcher enters the equipment’s USMC or serial number.

(d) In the ORGANIZATION block, the dispatcher enters the noun name of the unit that is responsible for the equipment.

(e) In the lST or 2ND OPERATOR block for the appropriate 1ST or 2ND operator, the dispatcher enters the operator’s name as listed on the operator’s license (OF-346).

(f) In the TIME OUT block for the appropriate lST or 2ND operator, the dispatcher enters the time the equipment is dispatched.

(g) In the DISPATCHER'S SIGNATURE block for the appropriate 1ST or 2ND operator, the dispatcher signs.

(h) In the REPORT TO block for the appropriate 1ST or 2ND operator, the dispatcher enters location the operator is to report.

(i) In the OIL CHANGE HOUR/MILE DUE block, the dispatcher enters the hours/miles the next oil change is required. This block may be left blank when the equipment is enrolled in an oil analysis program. Leave this block blank when the equipment does not have an equipment operational time indicator.

(j) In the OIL CHANGE HOUR/MILE COMPLETED block, the dispatcher enters the hours/miles the last oil change was completed. This block may be left blank when the equipment is enrolled in an oil analysis program. Leave this block blank when the equipment does not have an equipment operational time indicator.

(k) In the LUBRICATION HOUR/MILE DUE block, the dispatcher enters the hours/miles the next lubrication is required. Leave this block blank when the equipment does not have an equipment operational time indicator.

(1) In the LUBRICATION HOUR/MILE COMPLETED block, the dispatcher enters the hours/miles the last lubrication was completed. Leave this block blank when the equipment does not have an equipment operational time indicator.

(m) In the PM SERVICE TYPE PM DUE block, the dispatcher enters the type of second echelon of maintenance or higher PMCS is due.

(n) In the PM SERVICE HOUR/MILE DUE block, the dispatcher enters the hours/miles a second echelon of maintenance or higher PMCS is due per the commodity section of this Manual. Leave this block blank when the equipment does not have an equipment operational time indicator.

(o) In the PM SERVICE HOUR/MILE COMPLETED block, the dispatcher enters the hours/miles last second echelon of maintenance or higher PMCS was completed. Leave this block blank when the equipment does not have an equipment operational time indicator.

(p) In the OPERATION BEFORE block, the dispatcher enters the legend as listed on the NAVMC 10524 indicating operator before-operation PMCS.

(q) In the OPERATION DURING block, the dispatcher enters the legend as listed on the NAVMC 10524 indicating operator before-operation PMCS.

(r) In the OPERATION AFTER block, the dispatcher enters the legend as listed on the NAVMC 10524 indicating operator after-operation PMCS.

(2) The operator enters the following:

(a) In the RELEASED BY block for the appropriate 1ST or 2ND operator, the operator obtains the signature of the person from the job supervisor. This signature authorizes the operator to return to the equipment pool. When the operator cannot obtain a released by signature the equipment officer, chief, or foreman may sign this block.

(b) In the TIME IN block for the appropriate lST or 2ND operator, the operator enters the time the equipment returned to the equipment pool.

(c) In the TIME TOTAL block for the appropriate 1ST or 2ND operator, the operator enters the total time the equipment was dispatched. This is the TIME IN block minus the TIME OUT block.

(d) In the HOURS OR MILES STOP block for the appropriate 1ST or 2ND operator, the operator enters the hours/miles indicated on the equipment's equipment operational time indicator before returning NAVMC 10523 to the dispatcher. Leave this block blank when the equipment does not have an equipment operational time indicator.

(e) In the HOURS OR MILES START block for the appropriate 1ST or 2ND operator, the operator enters the hours/miles indicated on the equipment's equipment operational time indicator before leaving the equipment pool. Leave this block blank when the equipment does not have an equipment operational time indicator.

(f) In the HOURS OR MILES TOTAL block for the appropriate 1ST or 2ND operator, the operator enters the total hours/miles the equipment was operated. This is the HOURS OR MILES START block minus the HOURS OR MILES STOP block. When the equipment does not have an equipment operational time indicator this block will equal the TIME TOTAL block.

(g) In the WORK PERFORMED lST or 2ND OPERATOR block for the appropriate 1ST or 2ND operator, the operator signs before returning the NAVMC 10523 to the dispatcher. This signature verifies that the work is completed.

(h) In the FUELS DIESEL block, the operator enters the number of gallons of diesel fuel used or added. Leave this block blank when diesel is not used or added.

(i) In the FUELS GAS block, the operator enters the number of gallons of gas used or added. Leave this block blank when gas is not used or added.

(j) In the LUBES OE block, the operator enters the number of quarts of engine oil used or added. Leave this block blank when engine oil is not used or added.

(k) In the LUBES GO block, the operator enters the number of quarts of gear oil used or added. Leave this block blank when gear oil is not used or added.

(1) In the LUBES GRS block, the operator enters the number of pounds of grease oil used or added. Leave this block blank when grease is not used or added.

(m) In the REMARKS block front or back, the operator enters any amplifying comments about the equipment. This block will include any corrective maintenance that requires second echelon of maintenance or higher.

(n) In the lST or 2ND OPERATOR'S SIGNATURE block for the appropriate 1ST or 2ND operator block, the operator signs. This signature verifies that all daily PMCS was completed.

(o) In each ITEM block for the OPERATION BEFORE, the operator initials verifying that before-operation daily PMCS, as indicated in the Legend for Marking and in the appropriate TM, is completed before leaving the equipment pool with the equipment.

(p) In each ITEM block for the OPERATION DURING, the operator initials verifying that during-operation daily PMCS, as indicated in the Legend for Marking and in the appropriate TM, is completed during equipment operation.

(q) In each ITEM block for the OPERATION AFTER, the operator initials verifying that after-operation daily PMCS, as indicated in the Legend for Marking and in the appropriate TM, is completed before returning the NAVMC 10523 to the dispatcher.

(3) The equipment officer, chief, or foreman signs the EQUIPMENT FOREMAN'S SIGNATURE block. This signature verifies that the equipment was properly used and that the NAVMC 10523 is completed properly.

d. Disposition. Retain NAVMC 10523 for a minimum of 30 days. When the equipment has been involved in an accident and an investigation is being conducted, retain the NAVMC 10523 until no longer required or the vehicle is disposed of or repaired.

4. MOTOR VEHICLE AND ENGINEER RECORD FOLDER (NAVMC 696D).

a. Purpose. The purpose of NAVMC 696D is to maintain a historical record of the equipment's transfer, receipts, modifications, and major assembly replacements; and to serve as a file folder for completed forms and records per the form filing and disposition instructions.

b. Responsibilities. Maintain a NAVMC 696D on each item of motor transport, engineer, and garrison mobile equipment. In some cases items of equipment are under one TAM control number but are associated with standard items of other commodity equipment, maintain a separate record folder for that specific commodity item per applicable chapters of this Manual. However, both records will reflect the Marine Corps registration number, chassis serial number, TAM control number, NSN, and ID number of the TAM as a single entity.

(1) The MCLB that first receives the item of equipment will establish the NAVMC 696D. MCLB will enter the descriptive data and any

modifications accomplished while the equipment is under their cognizance and control.

(a) When units other than the MCLB receives the item of equipment direct from the manufacturer of the NAVMC 696D is lost, that unit will be responsible for establishing the NAVMC 696D.

(b) When establishing or reconstructing a NAVMC 696D, use the establishment or reconstruction date in a five digit Julian date. (YYDDD)

(2) The custodian is responsible for keeping the entries in the NAVMC 696D up-to-date while the item of equipment is in the custodian's custody. When engineer equipment has more than one power plant, maintain NAVMC 10523 and 10524 on each power plant.

c. Preparation Instructions. The descriptive data of the item of equipment will appear on the top of the NAVMC 696D when it is received by the using unit. Make entries in the "transfer, modification, and major unit assembly replacement record" portion of the NAVMC 696D each time the item is received, transferred from one RUAF to another RUAF, modified, or a major assembly was replaced. The "Account Serial Number" column refers to the owning unit activity Code of the unit having custody of the item of equipment when the entry is made. Tactical wreckers and garrison mobile equipment (GME) wreckers require an annual condition inspection per MCO P11262.2, and the results must be filed inside the NAVMC 696D. Make entries on the face of the NAVMC 6956D as follows:

(1) MC Registration No. The Marine Corps registration number appearing on the item of equipment's data plate.

(2) Complete Nomenclature and Vehicle Code. The complete nomenclature, as shown on the item of equipment's data plate. When the information is not listed on the data plate or the item of equipment does not have a data plate use the information listed on the parts manual. In the upper right hand corner of this block enter the item of equipment's TAM control number, NSN, and ID number. The vehicle code is not applicable.

(3) Chassis Serial No. The chassis serial number appearing on the item of equipment's data plate.

(4) Date. The five digit Julian date (YYDDD) when the item of equipment is transferred or received from one unit (AC) to another, a modification is completed, or a major assembly replaced. This entry is not required for tactical equipment.

(5) Account Serial No. The AC of the organization accountable for the item of equipment each time an entry is made in the adjoining columns. This entry is not required for tactical equipment.

(6) Voucher No. The document number of the accountable transaction assigned by the custodian when the item of equipment is transferred from one RUAF to another RUAF. This entry is not required for tactical equipment.

(7) MI/TI No. The number of the MI directing the modification to be made to the item of equipment upon completion of the modification. This entry is not required for tactical equipment.

(8) Description of modification completed or Major Unit Assembly Replaced. When an MI is completed enter a brief description of the MI. When a serialized major unit assembly is replaced, enter brief description and the serial number of the new major unit assembly. When the item of equipment is transferred or received enter “transferred” or “received.” This entry is not required for tactical equipment.

(9) Remarks. When the Equipment Operational Time Indicator is replaced; that is, odometer/hour meter enter the date changed and the miles/kilometers/hours from the unserviceable and replacement odometer/kilometer/hour meter to permit proper rescheduling of scheduled preventive maintenance checks and services (PMCS). When the item of equipment is load tested, enter the hook throat base dimension measurement. When the item of equipment has anti-freeze changed, enter the type anti-freeze used and the date changed. temporary entries may be entered in pencil; for example, load tested, antifreeze changed.

d. Filing. Maintain the NAVMC 696D in the administrative office of the custodian of the item of equipment concerned or as designated by the commanding officer. When the face of the NAVMC 696D inside the new NAVMC 696D.

e. Disposition. When the item of equipment is transferred, forward the NAVMC 696D by certified mail with the invoice (not forwarded with the item of equipment) upon each change of custody of the item of equipment. When both shipping and receiving units are in the same vicinity, the NAVMC 696D may be hand-delivered. When the item of equipment is determined unserviceable and a Letter of Unserviceable Property (LUP) is received, destroy all records.

5. Marine Corps Publications Distribution System (MCPDS). MCPDS is a system that provides services in support of the initial issuance of publications by Marine Corps publication sponsors and supports publications management by field commanders including the Reserve component. MCPDS provides distribution of Marine Corps publications to other government agencies and non-government entities with a bona fide reason for receiving them.

a. Distribution. Distribution can be defined as the process of getting the required publication, in the right quantity, to the user of the publication. This process consist of two phases:

(1) Marine Corps Publication Distribution. From the publications stock control point, to the activity.

(2) Activity Internal Distribution. From the receiving point in the activity to the technical library.

In addition to the two phases of distribution, which describe the flow of an incoming publication there are two types of distribution.

(3). "Push" or Automatic Distribution. When a publication change or revision is published will be automatically distributed to match those quantities reflected on the PL.

(4). "Pull" or Requisitioning. Result of activity submitting a requisition to the publications stock control point.

b. Internal Publication Control. Determine PCN's your section requires, and then contact your unit's publication control point.

6. MODIFICATION CONTROL RECORDS NAVMC 11053/11054

PURPOSE: provides a readily available means of accurately determining the modification status of equipment.

RESPONSIBILITY: Commodity managers will maintain the records based on information obtained from other records and physical observation.

Disposition: For as long as a unit holds the item of equipment.

REFERENCE (S):

MCO P4790.2C	MMIMS (AIS) FMSS
TM-4700-15/1H	Equipment Record Procedures

UNITED STATES MARINE CORPS
COMBAT ENGINEER INSTRUCTION COMPANY
MARINE CORPS ENGINEER SCHOOL
PSC BOX 20069
CAMP LEJEUNE, NORTH CAROLINA 28542-0069

C-23A03
5 June 00
(95 POI)

STUDENT HANDOUT

INPUT TRANSACTIONS

LEARNING OBJECTIVES:

a. TERMINAL LEARNING OBJECTIVE: Provided maintenance directives and maintenance forms, with the aid of references, maintain and manage a MIMMS program in accordance with the below listed references. (1371.5.1)

b. ENABLING LEARNING OBJECTIVES:

(1) Given a completed Equipment Repair Order (NAVMC 10245), with the aid of references, be able to identify and answer questions related to information required to properly fill it out in accordance with TM 4700-15/1H. **(1371.5.1d)**

(2) Given a completed ERO Shopping/Transaction List (NAVMC 10925), with the aid of references, be able to identify and answer questions related to information required to properly fill it out in accordance with UM 4790-5, AND TM-4700-15/1H. **(1371.5.1e)**

(3) Given a Daily Process Report (DPR) with the aid of references analyze and answer questions related to the information contained in a DPR in accordance with the UM 4790-5. **(1371.5.1f)**

OUTLINE

1. Form NAVMC 10245, ERO (Equipment Repair Order).

a. Purpose. The purpose of an equipment repair order (ERO) is to request modification, calibration, corrective maintenance (CM), preventive maintenance (PM), limited technical inspections (LTI) on all ground equipment within the units organic maintenance capability.

(1) It is used for transmitting work to higher levels of maintenance and for recording and reporting the services performed. Maintenance personnel will use an ERO in all instances where either repair parts or resources are required in the performance of requested maintenance. It also may be used in conjunction with an ERO and is not required for the following:

(a) When total labor hours are less than 0.3 hours.

(b) When total parts cost is less than $25.00, and the parts do not have to be requisitioned.

(2) The ERO is not used to record either operator maintenance (first echelon) or depot level (fifth echelon).

(a) The ERO can be used in conjunction with the EROSL to requisition SL-3 components.

(b) The ERO will be used to report an end item of equipment sent to depot level maintenance (fifth EOM).

(3) Preparing a second EOM ERO is optional for the following:

(a) When transmitting test measurement diagnostic equipment (TMDE) into calibration lab.

b. Responsibilities.

(1) Preparing Activity. The preparing activity may be the equipment owner, the equipment user, (e.g., the equipment is on temporary loan), of the equipment custodian as in the case of the maintenance shop evacuating equipment to the next higher level of support. The preparing activity is responsible for the initial preparation of an ERO to include completion of the heading and description of work to be performed. In the TM 4700-15/1H those items marked with a pound (#) will be completed by the preparing activity during initial preparation of the ERO. The "Description of Work" block requires entries by both the preparing and maintenance activity.

(2) Maintenance Activity. A maintenance activity will receipt for the equipment by completing the "Accepted By", "Date" (DRIS), and "ERO No." blocks, and will complete those other blocks as indicated in the preparation instructions. A maintenance activity will enter information on work performed as maintenance actions are completed and will close out the ERO. If it becomes necessary for a maintenance activity to evacuate the equipment to the next higher level of support, the maintenance activity will initiate a new ERO, completing those items required of the preparing activity and using its ERO number as a request number.

c. ERO Composition. An ERO consists of sheets of self-carbonizing paper of four different colors: white, pink, green, and yellow.

(1) The white copy is the original.

(2) The yellow copy, after it is signed by the authorized individual of the maintenance activity, is an owning unit's receipt for the equipment while the equipment is in the maintenance activity.

(3) The pink copy is the administrative copy. It should be utilized to directly input the required information into the FMSS required for the "O", "T", "3" and "9" cards. After the "O" card information is entered, the pink copy will be married to the original for the remaining entries during the repair cycle. The pink copy also may be used to input "O/C" transactions.

After the "9" card information is entered, the pink copy may be used for local processes.

(4) The green copy is the shop copy. It contains the original signature of the individual drawing the equipment from the maintenance shop and thus becomes the shop's receipt for return of the equipment.

d. Preparation Instructions. An ERO will be completed as follows. The printed numbers in the blocks of an ERO heading correspond to CCs (card columns) for the "O" card except for the last line of the heading where the numbers correspond to CCs for the "T" or "3" card. Additionally, Various ERO blocks have been shaded to indicate those data elements required for "O/T" and "T" transactions. The printed numbers in the blocks at the bottom of an ERO correspond to CCs for the "9" card. The "Description of Work" block requires entries by both the preparing and maintenance activity. Entries proceeded by an asterisk (*) are completed by the preparing organization.

(1) ERO No. Enter the ERO number assigned by the maintenance activity performing the repairs.

(2) Serial No. Turned in if different from below. This item pertains to category C,D,F,H and K EROs. For category K EROs that apply to a component of an end item, enter the component serial number. Enter the serial number of the item turned in if different from the serial number entered in the SERIAL NUMBER block. Enter N/A, if not applicable.

(3) Accepted By (Signature). Enter the signature of the person accepting the equipment for the maintenance activity performing the repairs. The signature acknowledges the transfer of custody for the equipment. No entry is required for deferred EROs until the equipment is actually delivered to the maintenance activity. If the individual accepting the equipment for work is also the person having the authority to authorize the work, this entry is optional.

(4) DRIS (Date Received in Shop). Enter the Julian date on which the equipment is accepted by the maintenance activity performing the repairs.

(5) ORF (Operational Readiness Float). **LEAVE THIS FIELD BLANK.**

(6) Organization Doing Repairs. The preparing activity enters the noun name of the organization doing the repairs. This field may be left blank when the:

(a) Unit performing the maintenance action is also the equipment owner.

(b) Equipment is evacuated to a higher EOM and the destination AC is entered on the ERO.

(7) DEST. AC (Destination Activity). When the equipment is evacuated to a higher level of support, enter the activity code of the organization doing the repairs; otherwise leave blank.

(8) Request No. Enter the ERO number assigned by the original preparing organization. If the original preparing organization is also the maintenance activity performing the repairs, an entry is not required, as the “ERO NO." block will be utilized.

(9) DCD (Deadline Control Date). Enter the DCD (the Julian date on which the equipment was actually past deadline). This entry is required on Marine Corps Automated Readiness Evaluation System (MARES) and also assigned when a non- MARES reportable equipment is deadline.

(10) ECH (Echelon). Enter the echelon of maintenance (1,2,3 or 4) to indicate which echelon is performing the repairs. First echelon (1) will only be used when ordering SL-3 components.

(11) Serial Number. Enter the serial number of the equipment, if assigned. The serial number is obtained from the equipment data plate. As an example, the serial number from communication vehicles is taken from the data plate, not the registration number of the vehicle. When the serial number is placed on an ERO, the last ten characters of the serial number will be utilized, including symbols, exactly as on the equipment. The serial number will be right justified (i.e., the last number of the serial number will always appear in CC 35). Spaces, however, will not be depicted. Rather, the serial number will be closed up to eliminate spaces. For example, equipment serial number 2109 8A 421-8 will appear on the ERO as 21098A421-8.

(12) Job ID. **LEAVE THIS FIELD BLANK.**

(13) Qty. Enter the number of items to be repaired under this ERO number. Ensure that the field is filled; e.g., a quantity of "1" is entered as "01" and a quantity of "10" is entered as "10".

(14) RDD (Required Delivery Date). Enter the Julian date the equipment is required by the owner.

(15) Owning Organization. Enter the noun name of the owning unit.

(16) Owner AC (Activity Code). Enter the AC of the unit accountable for the equipment.

(17) Authorized by (Signature) Date. Enter the signature of the individual authorizing the work at the preparing activity. The date field may be left blank.

(a) Commanders will either personally authorize or delegate in writing to specific personnel the authority to sign.

(b) When the ERO requires a priority upgrade ensure that original signer is authorized to sign for the new priority.

(18) Defect. Enter the defect code found in UM 4790-5 which best describes the nature of the equipment defect. This entry is optional for units not supported by the FMSS.

(19) PRI (Priority). Enter the priority assigned to the ERO. The priority is established in accordance with MCO 4400.16. The priority is in accordance to your Force/Activity Designator (F/AD). A F/AD is:

(a) A unit, organization, or installation performing a function or mission.

(b) A body of troops, ships or aircraft, or a combination thereof; i.e., Marine Air Ground Task Force (MAGTF).

F/AD

a. Overall authority for assigning and reviewing F/ADs is vested in the Joint Chiefs of Staff. The JCS then delegates to the following:

(1) Fleet Marine Force (FMF) authorized to assign F/ADs II through V.

(2) Non-FMF authorized to assign F/ADs III through V.

Table 1-1. -- Priority Designator Matrix.

F/AD	**UND**		
I	01	04	11
II	02	05	12
III	03	06	13
IV	07	09	14
V	08	10	15

(20) ID Number. Enter the system ID (Item Designator) number of the end item undergoing repair. Ensure the alpha character of the ID number (06533A) is the correct designation for the specific item of equipment.

(21) Nomenclature. Enter the short noun nomenclature and/or model number of the equipment being submitted for repair.

(22) Category Code. Circle the applicable code.

Code	Definition
M	Readiness-reportable equipment, unit, critical repairs which deadline the item.
N	Non critical maintenance to readiness or non-readiness reportable end items.

P Non readiness reportable, critical repairs which deadline or degraded its operational capability.

X Readiness reportable, requiring critical repairs that do not deadline the item but degrade its operational capability.

Code	Definition
C	Component of an end item which deadlines or precludes the end item from operating at its full capacity. Category Code C EROs are primarily for inter shop use. The status of the end item deadlined or operational/ readiness or non readiness reportable must be reported through the use of Category Code M,N,P or X EROs. Category Code C is used to distinguish between repair for return to the end item/user as opposed to return to the supply system of a reparable (maintenance float) as is the case of Category Code F,H or D. There are cases when the Category Code C will apply to the inter shop of end items.
D	Depot reparable as indicated by the item recoverability code.
F,H	Secondary reparable as indicated by the end item's recoverability code.
K	Calibration only.
O	Shop overhead, pre-expended bin items.
S	SL-3 components for end items.

(a) The number of EROs that may be opened on a specific item of equipment and the procedures for upgrading and downgrading Category Codes will be subject to the following procedures:

1 When an end item is deadlined, a Category Code M or P will be assigned as required. When an item has been repaired to the extent that it is no longer deadlined the category code and priority of the ERO will be changed or the ERO closed.

2 Only one ERO (Category Code M,X or P) may be opened on a specific item at one time at each echelon of maintenance.

3 More then one category code ERO other then M, X or P may be opened on a specific item of equipment within the same level of maintenance or for evacuation. However, since an ERO is basically a control document, care should be exercised in opening multiple EROs. Under no circumstances will more then one ERO serve as a receipt for an item opened to evacuate the equipment.

4 Active Category Code N or X EROs may be upgraded to deadlined only if it has never been previously downgraded from deadline. Any ERO for which all three-task data fields for recording critical defects have been used may not be further upgraded or downgraded.

(b) Category Code O EROs are to establish an ERO base in the FMSS, which will allow the requisition of pre-expended bin and shop overhead materials. When such materials are associated with a specific type of equipment, the ID number of the equipment type will be used. When such material is applicable to more then one-equipment type, the dummy ID numbers shown in the MIMMS AIS ID Standards File as shop overhead will be used.

(c) Category Code S EROs may be used to establish an ERO base in the FMSS that will allow the requisitioning of operator/crew materials (SL-3 components). When such materials are requisitioned, the ID and serial number of the equipment end item will be used. If the end item serial number cannot be determined, then a local serial number will be assigned to the end item in accordance with UM 4400-124. If the ERO is opened against a multiple quantity of end items of the same type, (a batch ERO), a single right justified zero (0) will be used in lieu of a serial number. However, the use of category code "S" EROs to requisition all SL-3 deficiencies of a given commodity, e.g., motor transport, under a dummy TAM number is not authorized. Category code "S" EROs should only reflect current demands and will not be used as a pending/pest record of items procurable from non-system sources such as Direct Stock Service Center (DSSC), Self Service, etc. Accordingly, there is no requirement to record non-system demands/receipts with the "SC","PB" or "99" advice codes as the listing is already passed to the system on a monthly update. When the lack of an SL-3 component. deadlines the item, the SL-3 component shall be ordered under the ERO that deadlines the equipment.

(d) Category Code C allows to inter shop major components of an end item to maintenance shops at the same echelon or evacuate to a higher echelon of maintenance. Additionally, it allows maintenance shops to inter-shop end items at the same echelon due to restraint of one Category Code M, P or X EROs at the same echelon.

(e) Equipment is considered dead lined if it is not mission capable (i.e., can not perform its designed combat mission due to the need for critical repairs). Routine modifications, scheduled maintenance, or lack of non-critical repair parts (e.g., fenders and windshields will not in themselves cause a reportable deadline condition). It is the responsibility of the organization that owns an item to determine its deadline status and to ADD the item to deadline, if appropriate. It is also the responsibility of the organization that owns an item to DELETE the item from deadline, if it previously had been in a deadline status. It is the responsibility of the organization that is repairing the deadline item to report any changes in the condition of that item (e.g., NMCM to NMCS).

NOTE: "CRITICAL PARTS" ARE DEFINED AS THOSE PARTS OR SECONDARY REPAIRABLE WHICH PRECLUDE AN ITEM FROM PERFORMING ITS INTENDED MISSION OF SHOOTING, MOVING, OR COMMUNICATING AND WHICH REQUIRE SECOND THROUGH FIFTH ECHELON EXPENDITURE OF MAINTENANCE HOURS. "NON CRITICAL PARTS" ARE THOSE PARTS OR ACCESSORIES WHICH AFFECT AN ITEMS ABILITY TO DO ITS INTENDED MISSION BUT DO NOT PRECLUDE IT FROM SHOOTING, MOVING, OR COMMUNICATING.

(23) Job STAT (Status). Enter the appropriate code from the UM 4790-5, which represents the present status of the equipment (e.g., 00 for awaiting inspection, 12 for repairs in progress, etc.). This entry is optional for units not supported by the FMSS.

(24) JON (Job Order Number). **LEAVE THIS FIELD BLANK.**

(25) Shop Sect (Section). Enter the appropriate shop section code as indicated in UM 4790-5. This entry is optional for units not supported by the FMSS.

(26) Release from Investigation (Signature). **LEAVE THIS FIELD BLANK.**

(27) Disposition-Reference. Enter the reference documentation if the item has been declared unserviceable. If the ERO has been opened for more then one item (batching), the reference documentation will be indicated in the "Description of Work" block by serial number, unless the disposition instructions apply to all of the batched items.

(28) Owners Phone No. Enter the telephone number of the individual/ section to be notified upon completion of the requested services.

(29) Sec Rep (Secondary Reparable) NSN. **LEAVE THIS FIELD BLANK.**

(30) Remarks. Enter any other information considered appropriate by the originator or maintenance activity. Items to be entered:

(a) Old and new meter readings when odometers or hour meters are replaced.

(31) Card Type. Circle either T for "T" transaction or 3 for "3" transaction to indicate the desired transaction. When the T is circled, a "Y" may be placed in either the P or LP block if "parts" or "later parts" is required. The MAU block is used only by WestPac units to enter the appropriate MAU indicated on the "T" transaction.

(32) NSN of Item. Enter the NSN of the item to be repaired for "3" transaction submission. The NSN will be left blank for Cat Code C EROs. For Category Code F, H or D EROs, if the ID number block is blank or the SEC REP ID is not on the ID Standards File, the SEC REP NSN is a required entry.

(33) T-DRIS. Enter the Julian date on which the equipment was received in the shop performing the repairs.

(34) WSC. For the "3" transaction, enter the weapon system code of the item to be repaired if applicable. Weapon system codes for readiness reportable items are found in the current Marine Corps Bulletin in the 3000 series. The WSC of the end item will be used for Category Code C EROs.

(35) Nomenclature. For the "3" transaction, enter the nomenclature of the item being repaired. For calibration EROs on components ensure a "3" transaction is submitted to change the nomenclature. For

Category Code F, H or D EROs when the ID number block is blank or the SEC REP ID is not on the ID Standards File, the SEC REP nomenclature is a required entry.

(36) TAM CN/ID No. For the "3" transaction, enter the TAM number of the item being repaired. For Category Code C EROs, enter the TAM of the end item from which the component was removed. Intermediate maintenance facilities will enter the end item ID for secondary repairable. Entry will be right justified; i.e., ID number 04078C will be entered as 4078C. For F, H or D coded SEC REPs enter the last five digits of the actual end item ID number.

(37) Item No. Enter the number of each task performed in numerical sequence. This number may correspond to the task number in a TM (technical manual); if so the TM must be referenced in the "Description of Work" block one time. When utilizing task numbers from a TM during the performance of scheduled maintenance, only list in chronological order those tasks where actual work is performed (i.e., tighten, adjust, test, lubricate, remove, replace). If the TM does not indicate task numbers, list only those where actual work is performed. However, if during a task which calls for observation, a work task is performed (i.e., replace air filter if unserviceable), this work task should be indicated in the ERO.

(38) Description of Work. The preparing activity will enter a brief description of each task or symptoms of the failure. Units supported by the FMSS will also enter the primary and secondary defect codes in accordance with UM 4790-5 (e.g., Perform APM (b52), replace hour meter (X34), replace R22 in R/T front panel (T40), etc.). The maintenance activity will indicate the tasks as performed. These will correspond to the defects listed in the lower portion of the ERO. When all available parts are placed on the equipment and this does not complete the task, this will be indicated in general terms with labor hours in the appropriate column (e.g., replaced R-1, replaced door handle, etc.). Although procedures for a scheduled maintenance may require actions such as lubricate, replace oil/air/fuel filter(s), adjust brakes, etc., which may be identified as defects, these actions will be included in the PM defect code and listed under the PM defect as separate tasks performed. If during the PM, an area is found to be defective, such as bad break linings, these defects will be listed after the PM task, and defect code(s) and labor hours will be indicated. When entering a priority upgrade, ensure the new priority and date are entered in the Description of Work column and the new authorization, when required, in the Mechanics Signature block. Line out the original signature and the original priority when a new signature is entered.

(39) Labor (Hours). Enter the total labor hours to the nearest one-tenth of an hour required to repair each defect listed in the "Description of Work" block (e.g., Perform APM (b52) 6.3, replace hour meter (X34) 3.1, etc).

(40) Mechanic (Signature). Enter the signature of the mechanic/ repairer performing the repair of the defect. If more then one mechanic or repairer performs the repair, the senior supervisor will affix his/her signature as the responsible individual. Enter the signature of the person authorized to upgrade the priority when required.

(41) Status. Enter changes to equipment and/or ERO status as they occur; e.g., short tech, repairs in progress, and repairs complete. This will provide a history of the equipment on the ERO and also a vehicle from which "O/C" cards may be entered into the FMSS. It is not necessary to indicate all of the changes of status that occur the same day but only the last change that occurs on that day.

(42) Code. Enter the job status code that corresponds to the job status entered in the status column as described in the proceeding. Entries in this column are mandatory/optional as established in the major command maintenance management SOP and optional for units not supported by the FMSS.

(43) Status Date. Maintenance section enters the Julian date the change in status occurred.

(44) Non-SASSY Parts, Nomen, NSN or Part No. **LEAVE THIS FIELD BLANK.**

(45) QTY. **LEAVE THIS FIELD BLANK.**

(46) Cost. Enter the total cost for the specific non-SASSY parts used. Units not supported by the FMSS enter the total cost for the parts used.

(47) Civ. Labor Chg. (Civilian Labor Charge). Enter the total civilian labor charge to the nearest cent. Enter the cents in 18 and 19.

(48) Non -SASSY Parts Chg. **LEAVE THIS FIELD BLANK.**

(49) Date Closed. Enter the Julian date the equipment was returned to the owning unit.

(50) Mil Labor Hr (Military Labor Hours). Enter the total military labor hours used during the repair of the equipment to include Q.C. inspection time to the nearest one-tenth of an hour. Enter tenths of an hour in column

(51) Close Stat (Status). Enter the completion job status code from UM 4790-5. This entry is optional for units not supported by the FMSS.

(52) NO. Unser. Enter the number of secondary reparable items, which were washed out during the repair cycle. If the quantity washed out was "1", it will be entered as "01". This entry is made by fourth echelon capable units. This entry is optional for units not supported by the FMSS.

(53) EOTC (Equipment Operating Time Code). Enter the appropriate EOTC for the equipment repaired. The valid entries are "D" for days, "R" for rounds, "H" for hours and "M" for miles. To use hours, the equipment must have an hour meter from which to get a reading. In order to use miles, the equipment must have an odometer from which to get the reading. The EOTC may be obtained from the ID Standards File or the Daily Process Report. No entry is required for secondary reparable or items not on the ID Standards File. This entry is optional for units not supported by the FMSS.

(54) Primary Meter Reading. Enter the primary meter reading at the time the equipment was repaired. The meter reading must be compatible with the primary EOTC. The meter reading is taken to the nearest whole mile/hour. An

entry is required for items with a primary EOTC of "H" or "M". If the primary meter is replaced during the repair cycle, enter the new meter reading and ensure that one of the defect codes in the task data fields reflects the fact that the meter was changed. The old and new meter readings are entered in the remark block.

(55) Task Data Fields.

(a) If the second position of the "Job ID" is "3" or "$", refer to the procedures for completing the 9 transaction in the UM 4790-5.

(b) The "Task Data Fields" provide for the entry of defects with attendant tasks and work hours to effect repair of the defects into the FMSS.

(c) If three or less defects have been repaired/corrected, they will be entered in "Defect 1, 2 or 3", as appropriate.

(d) If more then three defects have been repaired/corrected, the three most prominent defects will be entered. This will include any PM and hour meter or odometer changes.

(e) Entries in this area are optional for units not supported by the FMSS.

1 Defect 1, Defect 2, and Defect 3. Enter the appropriate defect code from UM 4790-5.

2 Tasks. Enter the number of tasks associated with the defect code. This block must be completely filled. "2" tasks are entered as "002".

3 Work hours. Enter the total number of labor hours it takes to repair/correct the defect to the nearest one-tenth of an hour. Enter the tenths of an hour in columns 57,67 or 77 as applicable.

(56) Inspected By (Signature) Date. Enter the signature of the individual performing the quality control inspection of the repaired equipment and the Julian date the item was inspected.

(57) Owner Notified-Name Date. Enter the name of the individual in the owning unit who was notified to pick up their equipment/ERO due to work completion. Also, enter the date notified. If the unit is notified more then once, make additional entries under the first entry. If the unit performing the maintenance actions is also the owner, this entry is optional.

(58) Delivered to (Signature) Date. Enter the signature of the individual authorized by the owning unit to receipt for the equipment upon completion of work. Enter the date of the signature as proof of return of equipment, the copies of the ERO will be arranged in such a manner so as to obtain the original signature on the green copy (shop copy) of the ERO.

e. Disposition. Upon acceptance of an ERO and the equipment by the maintenance activity, the yellow copy of an ERO is returned to the originator as a receipt. Upon completion of the required maintenance services, the yellow copy is returned to the maintenance activity and the original (white

copy) will be returned to the using/owning unit (with the original copy of the EROSL for Non-FMSS units) for filing in the equipment record jacket/folder, and retention for a minimum of 1 year. If the interval between maintenance actions exceeds one year, then the most recent completed maintenance ERO will be retained in the equipment record jacket/folder. Upon return of the equipment to the using/owning unit, the yellow copy will be destroyed by the maintenance activity. In the case of deferred/unit recall EROs, careful local procedures must be established to ensure proper accountability of the equipment and use of the yellow copy as a receipt after the maintenance activity signs the "Accepted By" block of the ERO. The green copy of the ERO will be retained in the files of the maintenance activity for a minimum of 1 year unless the maintenance activity also is the unit that has custody of the equipment records, in which case retention of the green copy is not mandatory.

2. Form NAVMC 10925, EROSL (ERO Shopping/Transaction List)

a. The EROSL is a duel purpose form. It serves as the ERO shopping list and as a MIMMS data input form. The EROSL will be used in conjunction with the ERO to requisition, receipt for, cancel, and record partial issues and credits of repair parts and secondary reparable associated with ground equipment undergoing repair. Additionally, to simplify data input, all required MIMMS input transactions may be placed on the EROSL.

NOTE: USE OF THE EROSL IS OPTIONAL FOR NON-FMSS SUPPORTED UNITS UNTIL CONVERTED TO AN AUTOMATED SYSTEM. IF LOCAL FORMS (DD 1348-1.ECT.) ARE USED IN LIEU OF THE EROSL, DISPOSITION INSTRUCTIONS WILL BE THE SAME AS FOR THE EROSL.

b. Configuration. The EROSL is configured in a pad of 100 sheets. The forms are self-carbonizing to permit their preparation in the desired number of copies. The front and back covers of the pad are printed with instructions and may be used as templates for completing the actual EROSL, however, the current edition of UM-4790-5 is the preferred reference for completing the EROSL data elements for all MIMMS input transactions.

c. Preparation Instructions (4/ADD Transaction).

(1) ERO Holder. The ERO holder is responsible for the initial preparation of the EROSL. This includes the ERO number, Unit, Date, circling the Material Usage Code ("6" is for SL-3 components, "7" is for CM and secondary repairable, "8" is for modification, and "9" is for PM), annotating the shop section and entering the reference source in the letter blank "A." The remaining letter blanks may be used as specified in local SOPs to provide additional information.

(2) Maintenance Shop. The maintenance shop will complete the "Maint Date/Init" fields on the header portion of the EROSL and will fill in information for the requisition of parts as indicated in the current edition of UM 4790-5 except for the document number and the SASSY Advice Code. Additionally, the maintenance shop will fill in the required information for requesting secondary reparable as instructed by the current edition of the UM 4790-5, except for the document number, secondary reparable NSN, supplementary address, unit of issue, JON, Demand Code, and Advice Code.

(3) Issue Point. For issues of backorders, the issue point is responsible for completing the document number and the SASSY Advice Code, researching parts information to ensure accuracy, issuing parts on hand "over-the-counter", backordering required items, and preparation of receipt transactions. In addition, the issue point is responsible for initialing the "Supply-Ip Date/Init" fields on the header portion of the EROSL and will complete the information for the requisition/receipt of parts as indicated in the current editions of UM 4790-5 and UM 4400-124.

d. Parts Information.

(1) CC 1 Transaction Code/Card Type. Enter a 4. This is a required entry.

(2) CC 2-6 ERO Number. Enter the ERO number to which the parts information applies. This is a required entry.

(3) CC 11-23 Repair Part/Sec Rep NSN. Enter the NSN of the repair part to be added. This is a required entry.

(4) CC 24-25 Quantity. Enter the quantity of repair parts to be added. This entry must be numeric and right justified. The field must be filled (e.g., a quantity of one would be entered as 001).

(5) CC 28-40 Document Number. Enter the document number of the part to be added. This is a required entry, completed by the supply section. CC-37 must contain a valid material usage code.

(6) CC 42-43 Priority. Enter the priority of the parts to be added. The priority should not be higher then the priority of the ERO. This is a required entry.

(7) CC 44-48 Supplementary Address. Enter the supplementary Unit Account Code. This field may be left blank, however, when ordering Sec Reps this is a required entry, completed by the issuer.

(8) CC 49-50 Unit of Issue. Enter the Unit of Issue of the parts. This is a required entry and must match the SASSY MHIF for the NSN.

(9) CC 51-64 Job Order Number. Enter the JON to which parts charge is to be billed. This is a required entry.

(10) CC 66 Demand Code. Enter the code that reflects if the demand code is recurring (R) or nonrecurring (N).

(11) CC 67 Non Mission Capable Supply. Enter the NMCS indicator (N) for NMCS requisitions, (E) for anticipated NMCS requisitions, or (9) for expedite handling. This field may be left blank.

(12) CC 68-69 Advice Code. Enter the advice code that best suits the parts being added. This will be completed by the supply section.

(13) CC 70-79 Part Name. Enter the nomenclature of the part(s) to be added, left justified. This field may be left blank. If left blank, the nomenclature will automatically appear if it is resident in the SASSY files.

(14) CC 80 Transaction Type. Enter an "A" to indicate a 4 Add (parts) transaction. This is a required entry.

e. Special Instructions.

(1) Pre-Expended Bin (PEB) Items. All PEB items will be requisitioned under a shop overhead ERO in accordance with paragraph 2-2d(22)(b) of TM 4700-15/1f and UM 4790-5. Additionally, parts usage for PEB items applied in quantities equal to or in multiples of the Unit of Issue will be reported via the EROSL with MIMMS Advice Code "PB" and attached to the associated ERO.

(2) Scrounged Repair Parts. All repair parts obtained through scrounge action will be reported via the EROSL with MIMMS Advice Code "SC" and attached to the associated ERO.

(3) ERO Parts Bin. An ERO Parts Bin is an area where the parts ordered on an ERO are stored, waiting to be placed on the equipment. The area can be a shelf, box, or something similar. All small parts for the same ERO are kept together in the same ERO bin, the location of which is normally indicated by the ERO number. Large parts, by virtue of their size, require a larger area and are normally stored together, regardless of the ERO to which they belong.

(a) Upon receipt of parts which will not be immediately installed on the equipment, the EROSL will be annotated as to the date/quantity of items received and ERO bin location, if the location is designated by other then an ERO number.

(b) If parts are removed from the ERO bin for installation, the shop copy of the EROSL will be annotated by the mechanic or shop chief accordingly.

(c) The method of annotation may be by circling, check marks, use of blanks in the heading of the EROSL, use of unused card columns, or written information on the EROSL. The annotation procedures must be contained in the unit's Maintenance Management SOP.

(d.) Disposition. Upon completion of the required requisition information by the using unit, the EROSL is taken to the issue point where issues are made, if possible. The issue point completes its required information for repair parts/secondary reparable and returns the second copy of the EROSL to the preparing activity. The first copy is maintained by the issue point for local use while parts/secondary reparable are outstanding. The issue point forwards the original EROSL to the keypunch center for processing. The keypunch center returns the original to the issue point when the required information has been automated. When all part transactions reflected on the EROSL have been accepted on the Daily Transaction Listing/Daily Process Report, the original EROSL is returned to the originator who will join it with the original ERO. FMSS supported units are not required to retain the EROSL after the ERO has been closed. Non-FMSS supported units will file the completed original (or its commercial equivalent) ERO and EROSL

together and retain them for a minimum of one year. If the interval between maintenance actions exceeds one year, then the most recent completed ERO and EROSL will be retained in the equipment record jacket/folder.

3. DAILY PROCESS REPORT

a. Description. This report provides maintenance managers at all levels visibility of active EROs in their shops.

(1) EROs which have had action taken will be indicated by two asterisks (**) to the left of the ERO number.

(2) The parts charge is cumulative, increasing whenever an 8 card (receipt) is processed.

(3) The job status field is capable of presenting up to ten history entries. Any quantity over ten will cause the oldest status to drop from the record.

(4) Supply status on this report is normally entered automatically from SASSY and MILSTRIP input. The ability to enter manual status is available using the MIMMS 7 transaction.

b. Use. The information on this report provides the complete history of an item in the maintenance cycle.

(1) Distribution of this report should be to the shop section level and the unit MMO.

(2) Information for each open ERO is presented in ERO sequence.

(3) The first two lines of each ERO present basic identification data and current maintenance status.

(4) The third line for each ERO is a listing of repair parts requirements and the supply action to date on these requirements. The MMO can quickly see the outstanding requirements and their current statuses. This information can also be used to verify that priorities of maintenance are in agreement with repair parts requirements.

(5) Situations can also be spotted where maintenance activities have added on parts, which may indicate poor initial inspection. Repeat parts can be identified which may indicate that parts previously received have been applied elsewhere, the initial inspection was faulty, parts previously received were faulty or damaged, or that the mechanic lost the part during installation.

(6) Additionally, the misuse of category codes, priorities, and NMCS/ANMCS indicators are recognizable. The MMO can identify parts which have long lead-times based on current status and take action to expedite

(7) This report is a tool which maintenance management personnel can use to conduct the sassy additional demand reconciliation.

(8) For specific information on reconciliation, refer to the current editions of MCO P4790.2 and UM 4400-124.

(9) Via submissions of a T transaction, the MMO can identify the parts on requisition at a different echelon of maintenance for an item of equipment.

(10) Finally, upon closeout, the MMO can see the labor and material resources expanded for a given ERO.

c. Legend

(1) First Line

(a) ERO - This column displays the equipment repair order number.

(b) TAM - This column displays the table of authorized material control number of the equipment undergoing maintenance.

(c) ID - This column displays the identification number of the equipment undergoing maintenance.

(d) SERIAL # - This column displays the USMC/manufacturer's serial number of the equipment undergoing maintenance.

(e) JON - This column displays the account number to which the cost of maintenance is to be charged.

(f) CAT - This column displays a code that identifies the category of the equipment undergoing maintenance. This code is used in the production of equipment readiness transactions.

(g) RDD - This column displays the required delivery date. A date entered in this field indicates the equipment's criticality to the unit and will specify the date on which the unit requires the equipment. If this date cannot be met, an ORF exchange may be required or requested.

(h) PRI - This column displays the priority of need of the equipment having maintenance performed.

(i) NSN - This column displays the national stock number (NSN) of the equipment having maintenance performed.

(j) NOMEN - This column displays the noun name of the equipment having maintenance performed.

(k) DCD - This column displays the deadline control date. The date on which the equipment was actually past deadline.

(l) DRIS - This column displays the date received in shop. (The date on which the equipment was received in the shop performing the maintenance).

(m) JOB-ID - This column displays the job identification code. A code that best describes the maintenance action being performed.

(n) ORF - This column displays the operational readiness float indicator. A code of Y in this field indicates that an ORF replacement item is desired by the unit. If an ORF exchange is required, the RDD must also have been entered. A code of N indicates an ORF replacement item is not desired.

(o) EOTC - This column displays the equipment operational time code. The code, extracted from the ID standards file, identifies the primary operating mode for the item of equipment such as miles, hours, days, or rounds.

(p) CLOS - This column displays the close flag. A code of NO indicates that the ID number/serial number of the record did not match a NSN/serial number on the SASSY reporting unit allowance file (RUAF). The record cannot be closed until this flag is removed by corrective action. Blank indicates either a match or no edit.

(2) Second Line:

(a) AWTG-STAT - This column indicates the status of the equipment prior to being inducted into the maintenance cycle or once maintenance has been completed.

(b) DEST-AAC - This column displays the destination ACC to which the equipment is being evacuated for repairs.

(c) JOB-STATUS - This column reflects the actions that have occurred on the equipment and the date each action was initiated.

(d) PARTS CHARGE - This column displays the accumulated parts charge for those parts that have been obtained. Non-system parts charges are input via the 9 transaction. SASSY parts charges are computed during system processing.

(e) ECH - This column displays the echelon of maintenance. These codes indicate the echelon performing the required maintenance such as 1 or 2 (organic), 3 or 4 (intermediate).

(f) QTY - This column displays the quantity of equipment undergoing maintenance.

(g) X-EROS - This column displays the two intershop/interechelon EROs for an item of equipment. These ERO numbers reference EROs of different maintenance activities.

(h) MARES/DATE - This column displays the MARES logistics readiness indicator. A machine-generated code that identifies the type of LM2 readiness transaction that has been prepared for an ERO and the date of that transaction.

(i) DEFECT - This column displays the interpretation of the defect code used in the input transaction. The first part of the interpretation

relates to the first character of the defect code, and the second part of the interpretation relates to the second and third characters of the defect code.

(j) DDL - This column displays deadline days. The total number of days the equipment has been deadline. This is the sum of the current processing date minus the DCD or the accumulated category M days deadline.

(k) DIS - This column displays days in shop. The total number of days the equipment has been in the maintenance shop. This is the sum of the current processing date minus the DRIS.

(L) OWNER - This column displays the activity address code of the unit that owns the equipment.

(3) Third Line.

(a) RCVD - This column serves two purposes. First, when an item has been received and the receipt processed, the date of receipt will be posted. Second, when a cancellation request has been inducted for an item, the letter C will be posted. If the column is blank, it indicates the parts record is open.

(b) DOCUMENT # - This column displays the unit document number used for repair parts requisitioned or the applicable modification instruction number. When a secondary repairable is issued over the counter to the customer by the maintenance float, the document number of the maintenance float will be reflected. When a secondary reparable is back ordered to the customer by the maintenance float, the document number of the using unit will be reflected.

(c) U/I - This column displays the unit of issue of the item requested.

(d) QTY - This column displays the quantity of material requisitioned.

(e) PRI - This column displays the priority of the requisition. The priority of the requisition may not exceed the priority of the ERO; however, parts may be requisitioned on a lower priority. In other words, If the priority of the ERO is 06 and parts are on order, there should be at least one priority 06 part on requisition. This does not preclude the requisitioning of lower priority parts on a priority 06 ERO.

(f) PART-NSN - This column displays the national stock number (NSN) or local stock number (LSN) of the part requisitioned.

(g) PART NAME - This column displays the nomenclature of the part requisitioned.

(h) STAT - This column displays the current status on the requisition. The status code is a two-digit code that indicates the status of the requisition at the supply source. When shipping status has been provided to the unit, the mode of shipment code will be reflected. The mode of

shipment code is a one-digit code that identifies the means by which the item is being shipped to the unit.

(i) DIC/EXC - This column displays the type of status being provided. The type of status is identified by a document identifier code (DIC). DICs in the AE series identify the status as automatic supply status. DICs in the AS series identify the status as automatic shipment status. Codes in the B series will also appear. These are SASSY exception codes. An exception is generated when a transaction processes against the units loaded unit balance file (LUBF) and conditions were present which caused the exception to be created. When a transaction fails to pass the master edit process in SASSY and is rejected from processing, the letters REJ are entered.

(j) NMCS - This column displays the not mission capable supply indicator which is a code that indicates that the material requisitioned is for a mission-essential item. This is considered deadline for lack of the specific material or is anticipated to be deadline in the near future if the material is not received. An N indicates NMCS, E indicates anticipated NMCS, and 9 indicates items requiring expedited handling.

(k) LKH - This column identifies the last known holder of the transaction. The routing identifier codes for last known holders are contained in the current edition of UM 4400-71. When the LKH is identified as FLT, it indicates that the maintenance float is the supply source for the item.

(l) ADV - This column displays the advice code. MIMMS advice codes identify information relative to the processing of the requisition and are not input to the supply system. MIMMS advice codes are contained in the legend for the 4 (parts) transaction contained in chapter 6 of UM 4790-5. SASSY advice codes are contained in UM 4400-124.

REFERENCE(S):

TM 4700-15/H
MCO 4790.2C
MCO 4790.2B
UM 4790-5

UNITED STATES MARINE CORPS
COMBAT ENGINEER INSTRUCTION COMPANY
MARINE CORPS ENGINEER SCHOOL
PSC BOX 20069
CAMP LEJEUNE, NORTH CAROLINA 28542-0069

C-23B01
5 June 00
(95 POI)

STUDENT HANDOUT

SOILS

1. LEARNING OBJECTIVES

a. Terminal Learning Objective:

(1) Given a tactical situation and a mission to construct a horizontal or vertical facility, with the aid of references, perform field identification of soil in accordance with FM 5-410 and FM 5-530. (1371.2.30)

b. Enabling Learning Objectives:

(1) Given an unidentified soil sample, perform field identification tests per FM 5-410 and FM 5-530. (1371.2.30a)

(2) Given the results of field identification tests, classify the soil using the Unified Soils Classification System (USCS) per FM 5-410 and FM 5-530. (1371.2.30b)

OUTLINE

1. SOIL FORMATION. The term “soil” refers to the entire unconsolidated material that overlies and is distinguishable from bedrock. Soil is composed principally of the disintegrated and decomposed particles of rock. It also contains air and water as well as organic matter derived from the decomposition of plants and animals. Soil is a heterogeneous accumulation of cemented or weakly cemented mineral grains enclosing voids of varying sizes. These mineral grains range in size from large boulders to single mineral crystals of microscopic size. The process of rock weathering and additionally the process of transportation create soil.

a. Weathering. Weathering is the physical or chemical breakdown of rock. These physical and chemical processes will vary with the environmental conditions present.

(1) Physical Weathering is the disintegration of rock. It breaks rock masses into smaller pieces without altering the chemical composition of the pieces. Processes that produce physical weathering include:

(a) Unloading - Extensive fracturing that results from the relief of pressure on a rock unit due to the removal of overlying material.

(b) Frost Action - The fracturing that occurs when trapped moisture in rock freezes. This moisture can expand up to one tenth of its original volume, creating pressure of up to 4000 pound per square inch (psi).

(c) Organism Growth - Trees and plants readily grow in the joints of rock masses near the surface. The wedging action caused by root growth hastens the disintegration process.

(d) Abrasion - Sediments suspended in wind or fast-moving water can act as abrasives to physically weather rock masses. Rock particles carried by glacial ice can also be very abrasive.

(2) Chemical Weathering is the decomposition of rock through the chemical reactions that take place between minerals of the rock and the air, water or dissolved chemicals in the atmosphere. Chemical weathering processes include:

(a) Oxidation - The chemical union of a compound with oxygen. An example is rusting, which is the chemical reaction of oxygen, water and the iron mineral pyrite, which forms ferrous sulfate.

(b) Hydration - The chemical union of a compound with water.

(c) Carbonation - The chemical process in which carbon dioxide from the air unites with various minerals to form carbonates.

b. Formation Methods

(1) Residual Soils. Where residual soils are formed, the rock material has been weathered in place. While mechanical (physical) weathering may occur, chemical weathering is the dominant factor.

(2) Transported Soils. By far, most soils that we encounter are materials that have been transported and deposited at a new location. Three major forces - glacial ice, water and wind - are the transporting agents; hence, these soils can be divided into glacial deposits, sedimentary (water-laid) deposits and eolian (wind-laid) deposits.

2. SOIL CHARACTERISTICS. The physical characteristics of a soil aid in determining the engineering characteristics. These properties form the basis for the system of soil classification used to identify soil types. The physical characteristics of soil particles are size and shape.

a. Grain (Particle) Size. Soils are divided into groups based on the size of the particle grains in the soil mass. Particle size is determined through the use of sieves. A sieve is a screen attached to a metal frame. There are two types of sieves, inch and numbered.

(1) Inch Sieves - These sieves range in size from 3” to 1/4” and are measured by the clear distance between the wires.

(2) Numbered Sieves - These sieves are numbered from #4 to #200 and are measured by the number of openings per linear inch.

If a particle will not pass through a screen of a certain size opening, it is said to be “retained on” that sieve. The following table lists size groups within the Unified Soils Classification System:

Size Groups	Sieve size	
	Passing	**Retained on**
Cobbles	No Maximum Size	3 inch
Gravels	3 inch	Number 4
Sands	Number 4	Number 200
Fines	Number 200	No Minimum Size

b. Particle Shape. Two general shapes are normally recognized: bulky and platy. The bulky shapes include particles that are relatively equal in all three dimensions. In platy shapes, one dimension is very small compared to the other two; for example, a thick book would be considered bulky, but a page of a book would be platy.

(1) Bulky Shapes. Bulky shapes are subdivided depending on the amount of weathering that has acted on them.

(a) Angular particles are particles that have recently been broken up. Jagged projections, sharp ridges and flat surfaces characterize them. The interlocking characteristics of angular gravels and sands generally make them the best materials for construction. These particles are seldom found in nature because the weathering processes normally wear them down in a relatively short time.

(b) Subangular particles have been weathered until the sharper points and ridges of their original angular shape have been worn off. The particles are still very irregular in shape and are excellent for construction.

(c) Subrounded particles are those on which weathering has progressed even further.
Still somewhat irregular in shape, they have no sharp corners and few flat areas. They are still adequate for construction.

(d) Rounded particles are those in which all projections have been removed and few irregularities remain. The particles approach spheres of varying sizes. They are not desirable in construction unless crushing can alter the rounded shape.

(2) Platy Shapes. As previously stated, platy particles are extremely thin compared to their length and width. Only fine-grained material of the clay variety has this characteristic shape. It is generally accepted that platy grains are responsible for the plasticity of clay. Platy particles are highly compressible under static load. Several phenomena are associated with platy shapes.

(a) Clays frequently undergo very large volume changes with variations in moisture content. Evidence of this can be seen in the shrinkage cracks that develop in a lakebed as it dries.

(b) Unpaved clay roads, although often hard when sun baked, lose stability and turn to mud during rainstorms.

(c) In general, the higher the moisture content of a clay or silt, the less its strength and hence its bearing capacity.

c. Gradation. The distribution of particle sizes within a soil mass is known as its gradation. Gradation is described by two main headings.

(1) Well-Graded Soil. A well-graded soil is defined as having a good representation of all particle sizes from the largest to the smallest. Additionally, the shape of the grain size distribution curve is smooth, the coefficient of curvature is between 1-3, and the coefficient of uniformity must be >4 for gravel and >6 for sand.

(2) Poorly-Graded Soil. There are two types of poorly graded soil.

(a) Uniformly graded soil consists primarily of particles of nearly the same size.

(b) Gap Graded soil contains both large and small particles, but the gradation continuity is broken by the absence of some particle sizes.

d. Bearing Capacity. The above soil characteristics are a measure of the soil’s suitability to serve some intended purpose. Generally, a dense soil will withstand greater applied loads (have greater bearing capacity) than a loose soil. Particle size has a definite relation to this capacity. Empirical tests show that well-graded, coarse-grained soils

generally can be compacted to a greater density than fine-grained soils because the smaller particles tend to fill the spaces between the larger ones. The shape of the grains also affects the bearing capacity. Angular particles tend to interlock and form a denser mass, and are more stable than rounded particles, which can roll or slide past one another. Poorly graded soils, with their lack of one or more sizes, leave more or greater voids and therefore a less dense mass.

3. UNIFIED SOIL CLASSIFICATION SYSTEM (USCS). Soils seldom exist separately as sand, gravel, or any other single component in nature. They are usually mixtures with varying proportions of different sized particles. Each component contributes to the characteristics of the mixture. The USCS is based on the characteristics, which indicate how a soil will behave as a construction material. These characteristics include the percent of gravel, sand and fines; gradation; and plasticity. The physical properties determined by field identification techniques are used to classify the soil. Once an accurate classification is obtained, the potential behavior of the soil under traffic or foundation loads can be determined.

a. Categories. In the USCS, all soils are divided into three major categories: Coarse grained, fine grained, and peat. The first two are differentiated by grain size, whereas the third is identified by the presence of large amounts of organic material.

b. Groups. Each of the major categories is further subdivided into groups and a letter symbol is assigned to each group. The primary letter of a classification relates to the soil group, while the secondary letter is descriptive of the soil's characteristics. The following symbols are combined to describe the soil mixture:

SOIL GROUPS	SYMBOL
Gravel	G
Sand	S
Silt	M
Clay	C
Organic	O

SOIL CHARACTERISTICS	SYMBOL
Well Graded	W
Poorly Graded	P

High Compressibility	H
Low Compressibility	L

*M and C are also used as secondary letters of the USCS

4. FIELD IDENTIFICATION OF SOIL. The soil types of an area are an important factor in selecting the exact location of airfields and roads. The military engineer, construction foreman, and members of engineer reconnaissance parties must be able to identify soils in the field so that the engineering characteristics of the various soil types encountered can be compared. Several simple field identification tests are described below. Each test may be performed with a minimum of time and equipment, although seldom will all of them be required to identify a given soil. The number of tests required depends on the type of soil and the experience of the individual performing them. By using these tests, soil properties can be estimated and materials can be classified. Such classifications are approximations and should not be used for designing permanent or semipermanent construction.

a. Soil Surveys. The survey of soil conditions at the site of proposed military construction provides information about the nature, extent and condition of soil layers. It is vital to both the planning and execution of military construction operations.

(1) Sources Useful in Planning Soil Surveys

(a) Intelligence Reports. Intelligence reports, which include maps and studies of soil conditions usually, are available for areas in which military operations have been planned. These reports are a source of information on geology, topography, terrain conditions, climate and weather conditions.

(b) Local Inhabitants. Local inhabitants may provide information to supplement intel reports or provide information about areas for which intel reports are unavailable. Data obtained from this source could include possible locations of borrow pits, sand and gravel deposits, and peat or highly organic soils.

(c) Maps and Aerial Photographs. Thorough inspection of maps provide information about topography that can be useful to the trained soils analyst such as locations

of hills, mountains, ridges, levees, sand dunes and alluvial fans. Aerial photographs allow the trained observer to identify landforms, slopes, drainage patterns, erosion characteristics and land use.

(2) Soil Exploration. Soil exploration, or soil boring, is nothing more than gathering soil samples for examining, testing and classifying. Three methods of obtaining samples are available to the military engineer: taking samples from the surface, from excavations already in existence or digging a test hole. Regardless of the method employed, a quantity of soil that will fit in a sandbag is required for analysis. When digging a test hole or conducting a soil boring, the following procedures should be followed:

(a) Locate soil borings at or adjacent to the point of interest.

(b) Ensure that the borehole is deep enough to penetrate the topsoil layer.

(c) Observe the color, moisture and number of layers exposed within the borehole.

(d) On large scale horizontal projects (roads or airfields), conduct multiple borings and compare data as required.

b. Procedures. An approximate identification of coarse grained soil can be made by spreading a dry sample on a flat surface and examining it, noting particularly, grain size, gradation, grain shape and particle hardness. All lumps in the sample must be thoroughly pulverized to expose individual grains and to obtain a uniform mixture when water is added to the fine grain portion. A rubber-faced or wooden pestle and a mixing bowl are recommended for pulverizing. Placing a portion of the sample on a firm, smooth surface and using the foot to mash it can also pulverize lumps. If an iron pestle is used for pulverizing, it will break up the mineral grains and change the character of the soil; therefore, using an iron pestle is discouraged. Tests for identification of the fine-grained portion of any soil are performed on the portion of the material that passes a Number 40 sieve. This is the same soil fraction used in the laboratory for Atterberg limits tests, such as plasticity. If the sieve is not available, spreading the material on a flat surface and removing the gravel and larger sand particles may make a rough separation.

Fine-grained soils are examined primarily for characteristics related to plasticity.

c. Equipment. Practically all the tests to be described can be performed with no equipment or accessories other than a small amount of water. However, the accuracy and uniformity of results is greatly increased by the proper use of certain equipment. The following equipment is available in nearly all engineer units (or may be improvised) and is easily transported:

(1) A Number 40 US standard sieve. Any screen with about 40 openings per lineal inch could be used, or and approximate separation may be used by sorting the materials by hand. Number 4 and Number 200 sieves are useful for separating gravel's, sands, and fines.

(2) A pick and shovel or a set of entrenching tools for obtaining samples. A hand earth auger is useful if samples are desired a few feet below the surface.

(3) A spoon issued as part of mess equipment for obtaining samples and for mixing materials with water to the desired consistency.

(4) A bayonet or pocket knife for obtaining samples and trimming them to the desired size. A small mixing bowl with a rubber faced or wooden pestle for pulverizing the fine-grained portion of the soil. Both may be improvised by using a canteen cup and a wooden dowel.

(5) Several sheets of nonabsorbent paper for rolling samples.

(6) A pan and a heating element for drying samples.

d. Testing. The procedures outlined below will result in a USCS classification. Many of the tests listed are not in sequential order. Utilize the wire diagram on page 11 to determine required tests and the order in which they should be performed. This wire diagram is an extract from FM 5-530, Materials Testing.

(1) Select a random but typical sample of soil.

(2) Perform visual examination, noting color, particle shape, maximum size aggregate.

(3) Separate the gravel.

(a) Remove from the sample all particles retained on the #4 sieve.

(b) Estimate the percent of gravel.

(4) Odor test

(a) Heat the sample with a match or open flame.

(b) If the odor is musty or foul smelling, there is a strong indication that organic material is present.

(5) Sedimentation test

CANTEEN CUP METHOD

(a) Place the sample (less gravel) in a canteen cup and fill it with water.

(b) Shake the mixture vigorously.

(c) Allow the mixture to stand for 30 seconds to settle out.

(d) Pour the water containing the suspended fines into another container.

(e) Repeat step (b) through (d) until the water poured off is clear.

(f) Dry the soil left in the cup (sand).

(g) Estimate the percent of sand.

MASON JAR METHOD

(a) Place approximately 1″ of soil into a Mason jar. Draw a line on the Mason jar to represent 100% of material to be tested.

(b) Add water to within 1″ from top of jar (about 5″ of water).

(c) Shake mixture vigorously for 4 minutes.

(d) Place jars on flat, undisturbed surface and allow to settle for 30 seconds.

(e) Mark settlement line on Mason jar. This represents % settled.

(f) Estimate % settled in relation to the original 100% line.

(g) Determine % sand using the following equation:

$$\frac{\%\ \text{Settled}}{100} \times \%\ \text{sand \& fines} = \%S$$

(6) Compare the gravels, sands, and fines.

(a) The gravel has been estimated in test (3) step (b).

(b) The sands have been estimated in test (5) step (g).

(c) Estimate the percent of fines. 100 - (%G + %S) = %F

(7) Grit or Bite test. *

(a) Place a pinch of the sample between teeth and bite.

(b) If the sample feels gritty, the sample is silt (ML) or sand (S).

(c) If the sample feels floury, the sample is clay (C).

(8) Feel test. *

(a) Rub a portion of dry soil over a sensitive portion of the skin, such as the inside of the wrist.

(b) If the feel is harsh and irritating, the sample is silt (ML) or sand (S).

(c) If the feel is smooth and floury, the sample is clay (C).

(9) Wet shaking test. *

(a) Place the pat of moist (not sticky) soil in the palm of the hand (the volume is about ½ inch).

(b) Shake the hand vigorously and strike it against the other hand.

(c) Observe how rapidly water rises to the surface.

(d) If it is fast, the sample is silly (M). If there is no reaction, the sample is clayey (C).

(10) Thread test. *

(a) Form a ball of moist soil (marble size).

(b) Attempt to roll the ball into a thread 1/8 inch in diameter.

(c) If thread is easily obtained, it is clay (C).

(d) If thread cannot be obtained, it is silt (M).

(11) Ribbon test. *

(a) Form a cylinder of soil that is approximately the size and shape of a cigar.

(b) Flatten the cylinder over the index finger with the thumb, attempting to form a ribbon 8 to 9 inches long, 1/8 to ¼ inch thick, and 1 inch wide.

(c) If 8 to 9 inches are obtained, it is (CH); if less than 8 inches is obtained, it is (CL); if there is no ribbon (less than 3”), it is silt (ML).

(12) Shine test. *

(a) Draw a smooth surface, such as a knife blade or thumbnail, over a pat of slightly moist soil.

(b) If the surface becomes shiny and lighter in texture, the sample is a highly plastic compressible clay (CH).

(c) If the surface remains dull, the sample is a low plasticity compressible clay (CL).

(d) If the surface remains very dull or granular, the sample is silt (M).

(13) Dry Strength test. *

(a) Form a moist pat 2 inches in diameter by ½ inch thick.

(b) Allow it to dry with low heat.

(c) Place the dry pat between the thumbs and index fingers only and attempt to break it.

(d) If breakage is easy, it is a slightly plastic silt (ML).

(e) If breakage is difficult, it is a medium plastic and medium compressible clay (CL) or a highly compressible silt (MH).

(f) If breakage is impossible, it is a highly plastic and highly compressible clay (CH).

* Tests conducted on material smaller than 1/32 inch in diameter (passes Number 40 sieve).

REFERENCES:

1. FM 5 - 410

2. FM 5 – 530

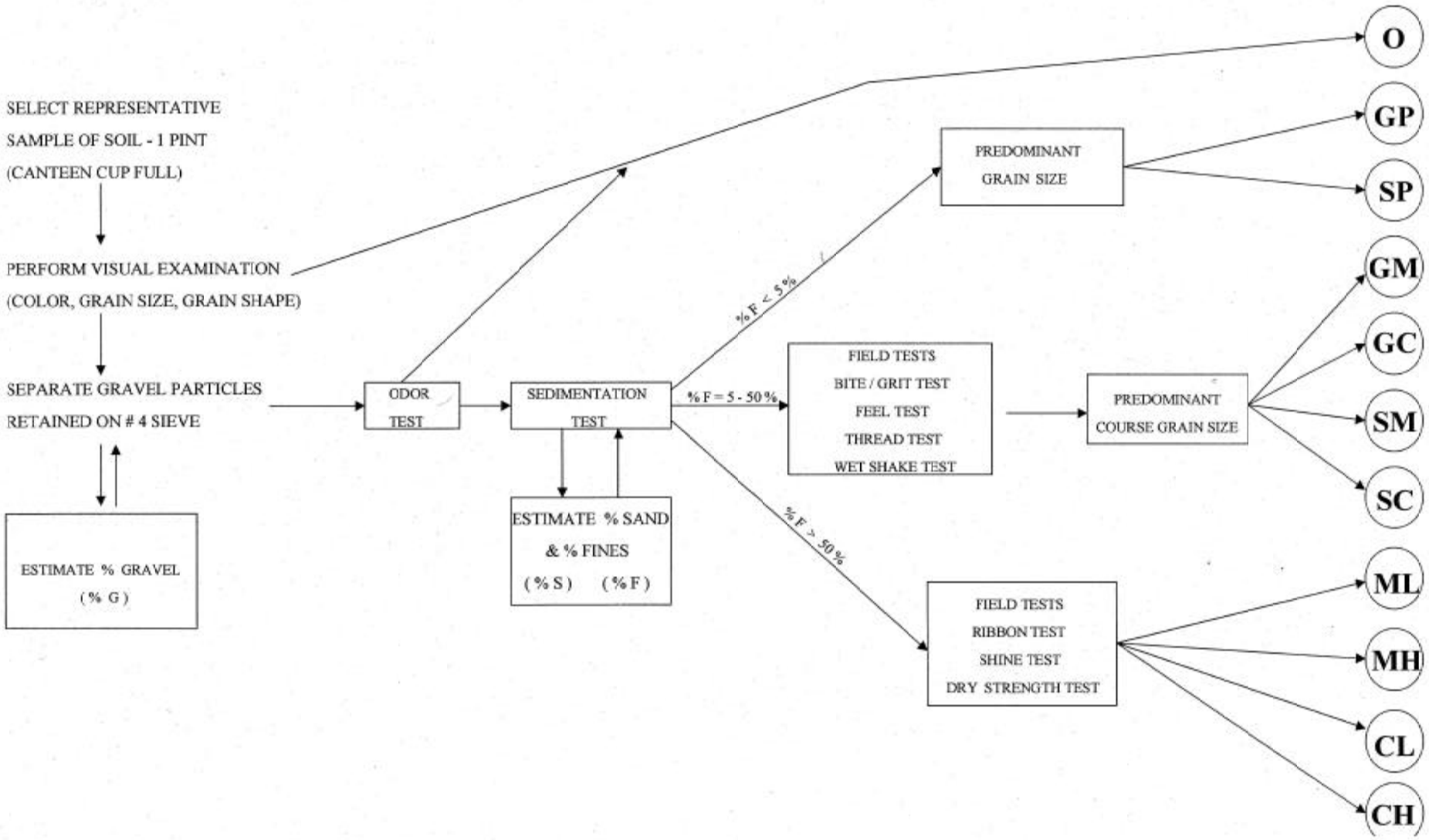
SELECT REPRESENTATIVE
SAMPLE OF SOIL - 1 PINT
(CANTEEN CUP FULL)
PERFORM VISUAL EXAMINATION
(COLOR, GRAIN SIZE, GRAIN SHAPE)
SEPARATE GRAVEL PARTICLES
RETAINED ON # 4 SIEVE
ESTIMATE % GRAVEL
(% G)
ODOR
TEST
SEDIMENTATION
TEST
ESTIMATE % SAND
& % FINES
(% S) (% F)
% F < 5 %
% F = 5 - 50 %
% F > 50 %
PREDOMINANT
GRAIN SIZE
FIELD TESTS
BITE / GRIT TEST
FEEL TEST
THREAD TEST
WET SHAKE TEST
PREDOMINANT
COURSE GRAIN SIZE
FIELD TESTS
RIBBON TEST
SHINE TEST
DRY STRENGTH TEST
O
GP
SP
GM
GC
SM
SC
ML
MH
CL
CH

UNITED STATES MARINE CORPS
COMBAT ENGINEER INSTRUCTION COMPANY
MARINE CORPS ENGINEER SCHOOL
PSC BOX 20069
CAMP LEJEUNE, NORTH CAROLINA 28542-0069

C-23B03
5 June 00
(95 POI)

STUDENT HANDOUT

EXPEDIENT DRAINAGE SYSTEMS

1. OVERVIEW: The purpose of this period of instruction is to teach you the types, purpose, design, construction, and maintenance of drainage systems.

2. LEARNING OBJECTIVES:

a. TERMINAL LEARNING OBJECTIVE(S)

1. Given a drainage system requirement, an area map, and FM 5-34, design an expedient drainage system in accordance with FM 5-34 and FM 5-540 vol. 1. (1371.2.31)

2. Given a drainage system requirement, construction drawings or blueprints and specifications, an area map, and FM 5-34, explain the construction procedures for the drainage system in accordance with FM 5-34 and FM 5-540 vol. 1. (1371.2.32)

b. ENABLING LEARNING OBJECTIVE(S)

1. Given a drainage system requirement, an area map, and FM 5-34, compute the total runoff volume in accordance with FM 5-34 and FM 5-540 vol. 1. (1371.2.31a)

2. Given a drainage system requirement and an area map, select appropriate drainage routes for the runoff in accordance with FM 5-34 and FM 5-540 vol. 1. (1371.2.31b)

3. Given a drainage system requirement, an area map, runoff across a particular drainage route, and FM 5-34, calculate the cross sectional area of water across the route in accordance with FM 5-34 and FM 5-540 vol. 1. (1371.2.31c)

4. Given a cross sectional area of water and a description of the slope, calculate the dimensions required for an open V-ditch to move the water in accordance with FM 5-34 and FM 5-540 vol. 1. (1371.2.31d)

5. Given a culvert diameter, calculate the cross sectional area of the culvert (pipe area) in accordance with FM 5-34 and FM 5-540 vol. 1. (1371.2.31e)

6. Given a fill depth for a cut, compute the maximum culvert size that can be used in the cut in accordance with FM 5-34 and FM 5-540 vol. 1. (1371.2.31f)

7. Given a cross sectional area of water and a maximum culvert size, calculate the number of culverts required to handle water in accordance with FM 5-34 and FM 5-540 vol. 1. (1371.2.31g)

8. Given a requirement for a check dam and FM 5-540 vol.. 1, calculate the materials required to construct the check dam in accordance with FM 5-34 and FM 5-540 vol. 1. (1371.2.31h)

9. Given construction drawings, blueprints, or specifications for an expedient drainage system, estimate the materials required to construct the system in accordance with FM 5-34 and FM 5-540 vol. 1. (1371.2.31i)

OUTLINE

1. SOURCES OF WATER/HYRDOLOGIC CYCLE.

a. Precipitation. Rainfall and ground water are the two primary concerns to most military drainage designers. Snowmelt may be of greater concern in wide ranging climates or in the design of reservoirs, but snowmelt estimation and reservoir hydrology is beyond our capabilities.

b. Interception. Vegetation decreases the velocity and amount of water. Rain will not reach the soil until the holding capacity of the vegetation as been exceeded.

c. Infiltration. A significant amount of water is absorbed into the soil. The amount of water absorbed depends on the type of soil, vegetal cover, and the slope of the terrain.

d. Ground water.

1. Surface water is water that has accumulated on the ground surface.

2. Subsurface water is the water that is in the ground (water table).

3. Capillary water is water that seeps up to the surface.

2. HASTY METHOD. The hasty method of runoff estimation is used when existing streams with an all-weather flow crosses or interferes with a construction site. This method provides an estimate of the cross-sectional area of water (Aw) to be expected as a result of the maximum annual runoff-producing storm.

a. This method makes the assumption that the cross section of the stream during a high water event approximates the shape of a trapezoid. The formula is:

$$Aw = \frac{W1 + W2}{2} \times H$$

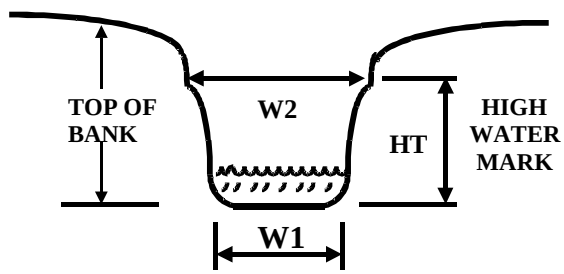

Where:
Aw = Area of the waterway.

W1 = Width of the channel bottom.

W2 = Width at the high water mark.

H = Height from the bottom to the high water mark.

b. Determining the measurements of the channel is the first step. The bottom width (W1) rarely presents a problem. The upper width (W2) may be more difficult. The upper width must be measured at the high water mark.

c. The high water mark is characterized by water flowing at higher than normal velocity. The high velocity flow tends to cause notable bank erosion and undercutting. The higher flow velocity also tends to retard the growth of vegetation on the banks. Thus the high water mark is that point where bank erosion is present or vegetation ceases.

d. The preferred location for observing the high water mark and for determining height (H) is along a straight run of the stream at, or immediately adjacent to, the construction site.

e. Once the expected cross-sectional area of storm water runoff (Aw) has been determined, since culvert pipes rarely flow full, a safety factor is incorporated so that adequate cross-sectional area is provided. This safety factor is provided in the term Ades, the culvert design cross section. The formula is:

$$Ades = 2Aw$$

Ades = design cross section.
2 = Safety factor
Aw = Area of the waterway that was previously computed.

Example #1 Step (1)

Aw= $\left(\frac{\_\_\_ + \_\_\_}{2}\right)$ ___ =

Aw=_____ sqft.

Example #1 Step (2)

Ades= _____(sqft) X ___2___ =

Ades= _____(sqft)

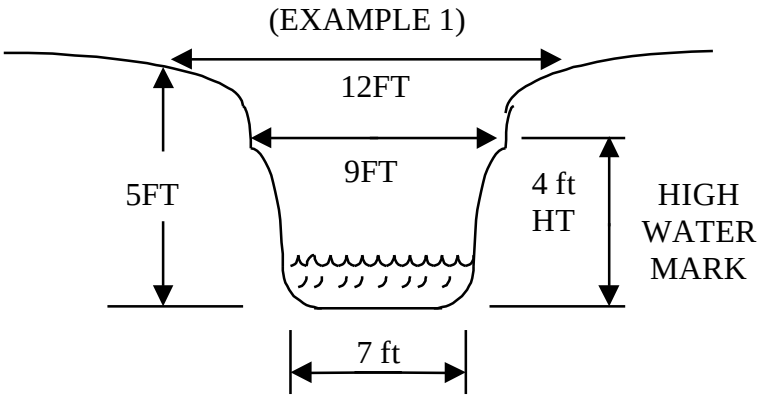

Example #2 Step (1)

Aw= $\left(\frac{\_\_\_ + \_\_\_}{2}\right)$ ___ =

Aw=_____ sqft.

Example #2 Step (2)

Ades= _____(sqft) X __2___ =

Ades= _____(sqft)

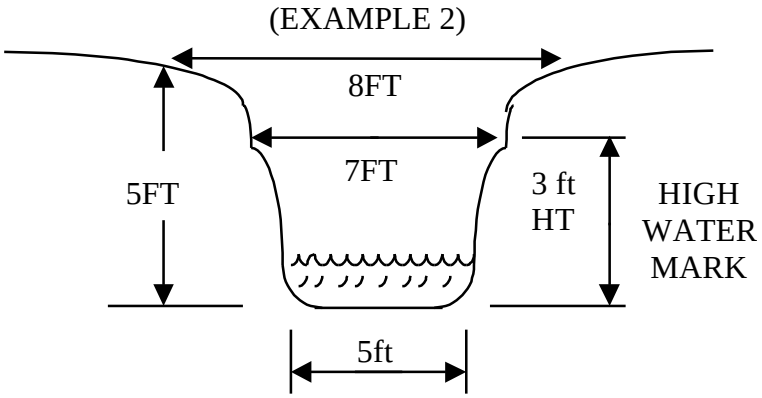

3. FIELD ESTIMATE METHOD.

The field estimate method is an abbreviated version of the more deliberate rational method. The field estimate method is used to estimate the peak volume of storm water runoff. The runoff is carried in drainage paths that only carry flow during and immediately following precipitation. Results of the field estimate method are adequate for determining the size of drainage structures for temporary facilities in drainage areas of 100 acres or less. The formula is: **Q = 2 x A x R x C**

Where:

Q = peak volume of storm water runoff, in cubic feet per second.

2 = a constant (safety factor).

A = area of drainage basin, in acres.

R = design rainfall intensity based on the one hour, two year frequency rainstorm, in inches per hour.

C = coefficient representing a ratio of runoff to rainfall.

a. Drainage area. The fastest and most preferred method for determining the size of the drainage area is the stripper method. The first step of the stripper method is called delineation. It is done on a topographic map.

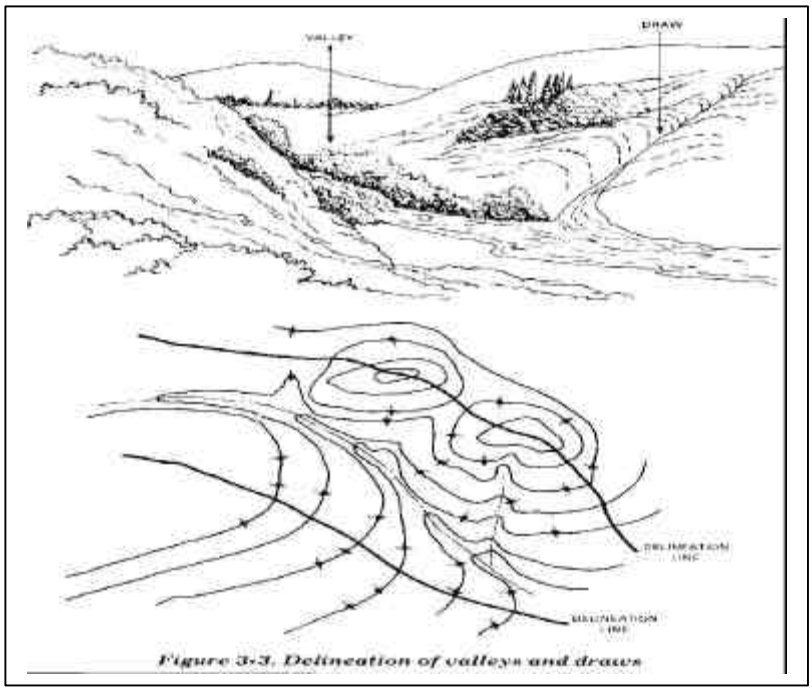

Figure 3-3. Delineation of valleys and draws

(1) Locate all the hill tops within the vicinity of the construction site.

(2) Draw arrows that follow the contour lines from hilltop down, you will then be able to see which area(s) will drain toward the construction site. This is the drainage area.

(3) Draw lines from hill top to hill top to delineate or outline an area.

(4) Locate the longest, steepest gradient (based on contour line interval) within the drainage area. This will be the base line.

(5) Now you must determine the area in square inches on the map and then convert to acres. Use a straight edge to draw a series of lines parallel to the base line, **one inch apart**.

(6) Starting with the base line, measure the length of each line within the limits of the drainage area. Add the length of all the lines together. This is the map area in square inches.

(7) Since you are concerned with acres, you must convert square inches on the map, to acres on the ground.

(a) First determine how many square feet are in one square inch on the map. Divide the map scale by twelve and then square the result.

EXAMPLE: If your map had a scale of 1:5000.

5000/12 = 416.67 ft. (Note 1" on map = 416.67 ft. on ground.)
416.67 = 173,613.88 (Notes 1 sq inch on map contains 173,613.88 sq feet on ground.)

(b) Second, determine how many square feet are in the drainage area. Multiply the square inches of the drainage area by the number of square feet per square inch.

EXAMPLE: If the total length of your strips had been 5.25 inches.
5.25" X 173,613.88 = 911,472.87

(c) Now you must convert square feet to acres. Divide the total area in square feet by the number of square feet in one acre, which is 43,560.

EXAMPLE: Your area had 911,472.87 square feet.

911,472.87 / 43,560 = 20.92 OR 21 ACRES

STUDENT PROBLEM: Using the map provided by the instructor, determine the acres of the drainage area.

b. Rainfall intensity. This is the intensity of the one hour, two year frequency rainstorm. This can be determined two different ways.

(1) Local rainfall data may be obtainable through the weather station or the intelligence officer (S-2). This is the preferred method because it is normally more accurate.

(2) The other method is by looking up the value on an isohyetal map. A copy of this map can be found on page 6-7 of FM 5-430, or on page 8-5 of FM 5-34. **Do not interpolate**. If the project location falls on an isohyetal line, read the value of that line. If it falls between two lines, read the larger value. If it falls within an encircling isohyetal line, read the value of the encircling line.

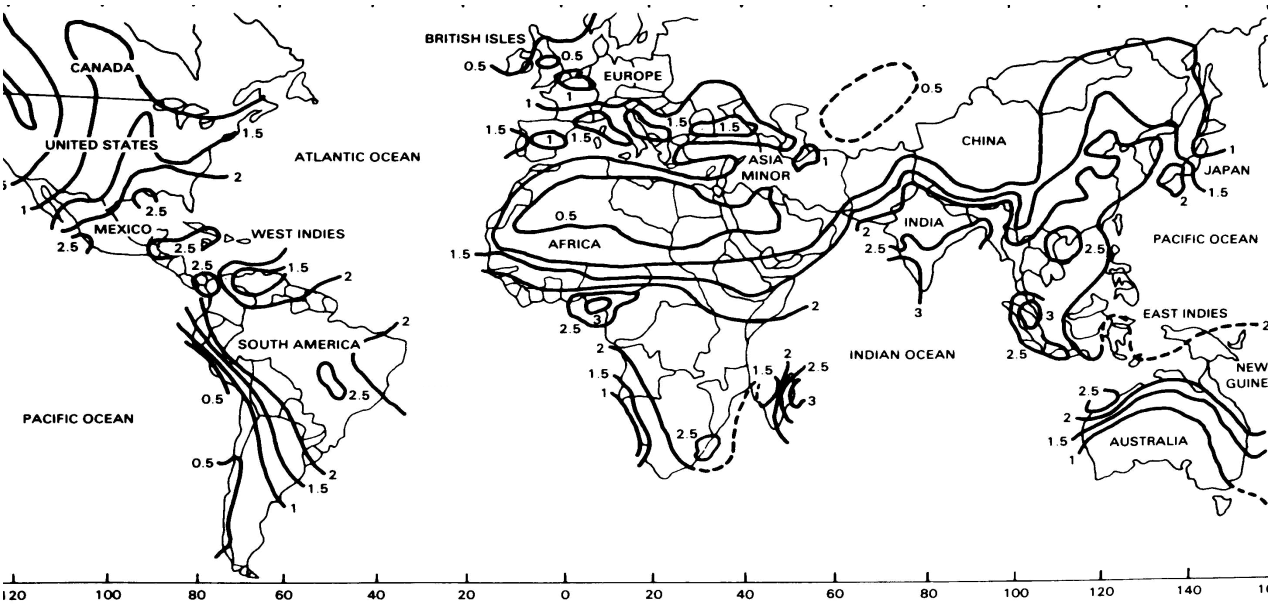

World Isohyetal Map

EXAMPLE: If your project location is Eastern North Carolina, you can see that it falls between 1.5 and 2.0. Use the larger value of 2.0.

c. Runoff coefficient. The runoff coefficient is the ratio of runoff to rainfall. It is the amount of water expected to drain from (not infiltrate) an area as the result of a specific amount of rainfall. The runoff coefficient is expressed as a decimal. There are three primary factors that affect the percentage, the soil type, surface cover and slope.

(1) Soil type. If the soil is porous, a large portion of the rain will infiltrate the soil. This condition would translate

to a smaller runoff coefficient. On the other hand almost all of the rainfall will pass over surfaces such as asphalt, concrete, and compacted gravel or macadam, thus resulting in a higher runoff coefficient.

(2) Surface cover. It is also important to know the surface cover. If the area is completely bare then it would be without turf. If the area was completely covered with vegetation then it would be with turf. If the area has some vegetation but is not completely covered then use the higher without turf value. If the area is wooded then the coefficient will be 0.20 because of the capability for the root systems to absorb water. **See table below.**

Soil or Cover Classification	C VALUES					
	Slope≤ 2 %		Slope >2 & <7%		Slope≥ 7%	
	w/turf	w/o turf	w/turf	w/o turf	w/turf	w/o turf
GW, GP, SW, SP	.10	.20	.15	.25	.20	.30
GMd, SMd, ML, MH, Pt	.30	.40	.35	.45	.40	.50
GMu, GC, SMu, SC CL, OL, CH, OH	.55	.65	.60	.70	.65	.75
Wooded area	.20	.20	.20	.20	.20	.20
Asphalt Pavement		.95		.95		.95
Concrete Pavement		.90		.90		.90
Gravel/macadam		.70		.70		.70

(3) Slope. As terrain becomes steeper, water flows sooner and more rapidly. This allows less time for infiltration to occur and results in the C value becoming larger for the natural cover or soil categories.

(d). Finding (C) the Runoff coefficient

(1.) (USCS) Using the soil classification based on the Unified Soil Classification System (USCS), select the predominant soil type located in the left column of **table 6-1**. Be sure to use the value that corresponds to the cover type. If the area is wooded or covered with asphalt, concrete, gravel or macadam simply lookup the C value in the left hand column of the table.

(2.) Slope percentage. Identify the slope on the map. The difference between the top and bottom of the slope is found by reading the elevation contours. Then the horizontal distance is measured and converted to the same unit of measure as the vertical distance.

Difference in Elevation
Elevation B =181m
Elevation A =100m
Difference (Vd) **81m**

Horizontal **=4150m**
Distance (Given)

Use the percent formula.

$$\frac{Vd}{Hd} X100 = \frac{\mathbf{81}}{\mathbf{4150}} x100$$

=1.9% or 2% Slope

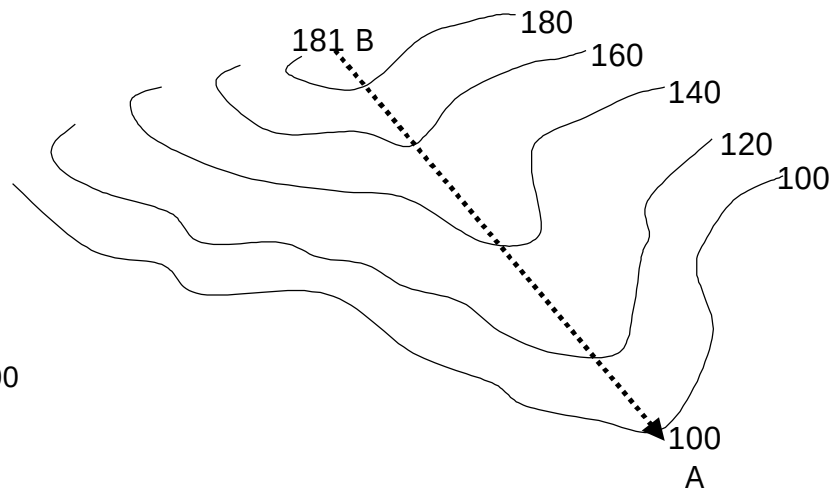

(3.) Turf. If the soil is not covered as previously explained then determine whether the area is with or without turf.

(4.) Safety. In all cases where you have more than one possible runoff coefficient, use the highest value.

EXAMPLE: Your drainage area is made up of ML soil, with 40% turf and a slope of 2%.

*Since your area is covered with 40% turf you use the highest value which will be without turf.

* Look up the value based on the drainage characteristics. You should obtain a value of 0.40 for your runoff coefficient.

a. Q = 2ARC

Q = Peak volume "cubic feet per second"

A = Area in acres, previously computed at **31.89** acres. Rounded up to the whole acre would be **32** acres.

R = Rainfall intensity for eastern North Carolina was found to be **2.0**

c = Runoff coefficient which was **0.40** **ML** soil without turf.

Q = 2 x 32 x 2 x 0.40

Q = 64 x 2 x 0.40

Q = 128 x 0.40

Q = 51.2 CFS

4. WATERWAY AREA. Expedient culvert and ditch design is based on the waterway area. The hasty method produced a result in terms of waterway area, but the field estimate method produced a result in terms of peak volume of storm water runoff (Q). The storm water runoff must now be modified so that it is in terms of waterway area.

a. First look at the equation where Q = VAw.

Q = peak volume of storm water runoff.

V = velocity of water, in feet per second (fps).

Aw = waterway area, in square feet.

b. For expedient purpose you will always use a velocity of 4 fps for design of expedient drainage structures. Using simple algebra, you can rearrange the above equation so that the result will be waterway area.

(1) Q = VAw

(2) Divide both sides of the equation by the velocity (V). The result is Q/V = Aw.

c. The final step would be to substitute the known and previously calculated values for the variables in the equation and solve for the waterway area.

EXAMPLE: You previously calculated a Q of 51.2 cfs, and the velocity is a given of 4 fps.

d. Aw = Q/V

e. As with the hasty method described earlier, you rarely design a drainage system to flow completely full. You must apply a safety factor which is represented by Ades.

Ades = Aw x 2

EXAMPLE: Since your waterway area is 16 sqft., multiplying by the safety factor of two gives a design waterway area (Ades) of 32 sqft.

5. TRIANGULAR (V) DITCHES: Triangular (V) ditches are used to move small quantities of water. Small quantities of water generally means Q < 60 cfs or AW $\leq$ 15 sqft. There are two formulas used to determine how wide and how deep the ditch should be. They are:

a.

$$D = \left(\sqrt{\frac{Ades}{X + Y}}\right) + .5$$

D = Water depth in feet
Ades = Design cross section
X = Slope ratio, or amount of vertical distance to every horizontal distance of the fore slope.
Y = Slope ratio, or the amount of vertical distance to every horizontal distance of the cut slope or back slope.
.5 = Constant as a safety factor.

b. Width = D x (X + Y)

Wt = Width of the top of the ditch
0.5 = 1/2 ft of freeboard
X = Determined by slope ratio.
Y = Determined by slope ratio.

c. X- Slopes less than or equal to 3:1 (H/V) ratio are recommended as safe side slopes for roadside ditches.

d. Y- It is recommended that the slope be a 1:1 (H/V) ratio.

e. The width formula uses the same X and Y as the depth formula. Also, you need the depth (D) to determine the width. To ensure the ditch will be able to move the necessary amount of water at peak periods a freeboard of 1/2 foot will be added to the depth prior to working this equation.

(Example from previous solution) AW = 16 sqft.

(1) $D=\sqrt{\frac{Ades}{X+Y}}$ **(2)** $D=\sqrt{\frac{2 \times 16}{3+1}}$ **(3)** $D=\sqrt{\frac{32}{4}}$

(4) $D=\sqrt{8}$ **(5)** $D=\sqrt{2.82}$

(5) D= foot of water depth rounded off to 2.8 water depth.

Freeboard 2.8 + 0.5 =3.3 ft. (cutting depth).

6. TRAPEZOIDAL DITCHES. Trapezoidal ditches are installed for larger runoff requirements, generally for Q >60 cfs or Aw >15 sqft. Compute the cross-sectional area of a trapezoidal ditch as if the trapezoid were a rectangle. The slope areas are not considered. Generally the designer selects the width of the bottom of the ditch based upon the width of the cutting edge of the equipment used in constructing the ditch then solves for d, the depth of water. For example, if the ditch is to handle a peak flow rate of 75 cfs and the bottom width is 12 feet, then:

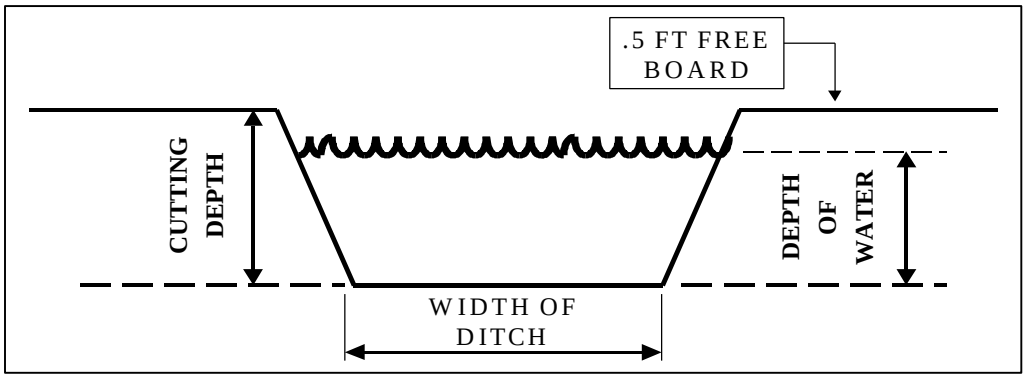

$$Aw = \frac{Q}{4\ fps} = \frac{75\ cfs}{4\ fps} = 18.75 \text{ or } 18.8 \text{ sqft}$$

$$D = \frac{Aw}{\text{bottom width}} = \frac{18.8 \text{ sqft}}{12} = 1.56 \text{ or } 1.6 \text{ feet deep}$$

Freeboard = 1.6 ft. deep + 0.5 = 2.1 ft. deep.

7. CUTTING DEPTH. Remember to add 1/2 foot of freeboard to the depth of water to determine the cutting depth (CD). CD may be exceeded, especially if it is less than 1.5 feet, the normal minimum depth. **CD = d + 0.5 ft**

8. CULVERTS A culvert is an enclosed waterway used to pass water through an embankment or fill. There are two classifications of culverts: permanent and expedient. The flow of water depends upon the materials the culvert is constructed of and the down stream conditions.

a. Permanent Culverts. There are different materials culverts may be constructed of such as corrugated metal, concrete, vitrified clay (VC), polyvinyl chloride (PVC), timber, and many other materials.

b. Timber Box Culverts. are used when standard culverts are not available. Timber culverts can be rapidly constructed but require good workmanship. They provide good strength to support superimposed loads and have hydraulic characteristics that compare favorably with other types of culverts. They are made of:

(1) Large timber (treated if possible)

(2) Made strong enough to support the heaviest vehicle that will be crossing.

(3) Must have minimum of 12" of cover.

c. Corrugated Metal; Pipe Culverts (CMP)

(1) 8"-72" Diameter
(2) Shipped in 26" long half sections, with a 24 inch effective length due to 2 inch overlap.
(3) Bolted in every hole, threaded end alternated.
(4) Cradled to prevent pipe shifting during back fill.
(5) Place exhaust end, at the same grade as ditch, 45-90 degrees off centerline.
(6) Multiple pipes must all be the same diameter.
(7) Multiple pipe spacing is half the diameter of the pipe.

9. MAXIMUM ALLOWABLE CULVERT DIAMETER. Permanent culverts are selected based on their diameter. There are two equations for determining the maximum diameter (Dmax) of a culvert. Both

methods depend upon the amount of fill used to bury the culvert. Fill (F) is defined as the distance from the inside bottom (the invert) of the culvert to the finished grade of the road. Cover (C) is another term used in culvert design. Cover is measured from the top of the culvert to the finished grade.

a. For fills greater than 36 inches use Dmax = 2/3F.

b. For fill less then 36 inches use Dmax = F-12.

EXAMPLE: From the hasty method example you had a AW of 16 sqft. and a Ades of 32 sqft. The stream itself was five feet deep with a road thickness of one foot. Therefore, you have a six foot fill.

c. Dmax = 2/3 F
(Step 1.) 6' x 12 = 72"

d. Dmax = 2/3 72 inches $\frac{2 \times 72}{3} = \frac{144}{3}$ or 48"

e. Dmax = 48 inches

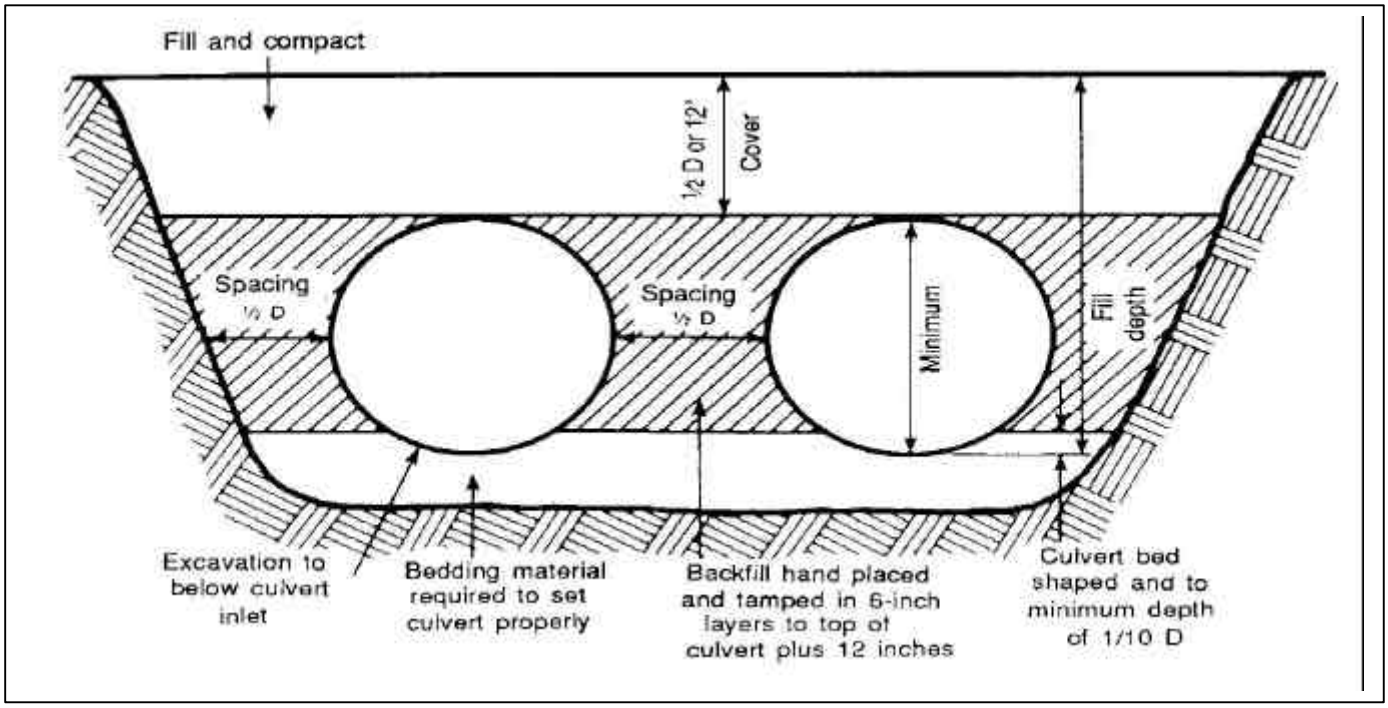

10. CULVERT MATERIALS. There are several factors that need to be considered when calculating materials. You will need to know the most economical diameter to be used as well as the total length of culvert necessary.

a. Economical diameter: We want to save material, therefore we want to put in the least number of pipes possible, and still equal or exceed the design area. Economy also dictates that we exceed the design area by the least possible amount. Manpower, too, is a factor that we must consider when thinking of economy, for it takes less time and effort to install 2 pipes than it does to install 3.

b. From the standpoint of economy, then, we cannot simply select the largest pipe that satisfies the fill and cover requirement. To find the most economical size, we must divide the Design Area by the end area of several different pipe sizes. We use the largest pipe that satisfies the fill and cover requirements as a starting point, and work with the next smaller size of pipe until the number of pipes required to provide necessary Design Area increases. When the number of pipes required increases, we have reached and just passed our optimal (or most economical) design, and we are no longer economical.

(1) Select the next smaller diameter culvert. Selecting the next larger diameter would lead to insufficient cover and, possibly, a culvert collapse should vehicles drive over it. Use the table below.

(2) Divide the design cross section (Ades) by the cross-sectional area of the diameter selected. Round up to the next whole number. Repeat using successively smaller pipes.

COMMON CULVERT SIZES

CORRUGATED METAL PIPE

Maximum Diameter (IN)	Cross-sectional area (SqFt)
12	00.79
18	01.77
24	03.14
30	04.91
36	07.07
42	09.62

48	12.57
60	19.64
72	28.27

EXAMPLE:

N48 = Ades/A48

N48 = number of 48 inch pipes.

A48 = cross-sectional area of a 48 inch pipe.

Ades = design waterway area.

N48 =

N48 =

N42 =

N42 =

N42 =

c. Culvert length. Since corrugated metal pipe is manufactured in two foot sections the calculated length must be rounded up to the even foot. Some other considerations include:

(1) Headwalls protect the soil around the culvert from erosion.

(2) Headwalls are always required at the upstream end of the culvert and are desirable at the downstream end. If a headwall is not constructed on the downstream end of the culvert, the end must be extended an additional two feet to prevent erosion of the fill.

(3) Headwalls need not be built precisely at the toe of the fill slopes. Most often, headwalls are recessed some distance into the fill section. The culvert length will have to be adjusted to this length. The amount of building materials and time will dictate whether the headwalls will be recessed or not.

(4) The length will be determined using road cross sections provided by the surveyor and will include the width of the road plus the length of the fill slopes.

(5) The length of the fill slopes may not be labeled, but can be computed using the slope ratio and the height at the road shoulder. Since the slope ratio is expressed as the horizontal distance to the vertical distance you can multiply the horizontal distance of the slope ratio by the vertical distance. The result will be the length of the fill slope.

(6) Pipe is ordered by length needed, and comes with enough nuts and bolts for assembly. It is recommended that an additional 15 percent be added to allow for damage during shipment and construction. This is obtained by multiplying the length by 1.15. Additionally you must multiply by the number of pipes to determine the total order length.

EXAMPLE: Using the cross section above and the knowledge that you will place headwalls at the toe of both fills.

Road: 22.5 feet wide
Left slope: 2:1 with a 7' depth.
Right slope: 3:1 with a 6' depth.
Gradient: 2%

(7) OL = order length

DL = Depth of fill at left shoulder

SL = Slope on left side slope

DR = Depth of fill at right shoulder

SR = Slope on right side slope

RW = road width including shoulders.

N = number of pipes. (culverts)

1.15 = waste factor.

LS (left shoulder slope) = (7'x 2:1)

RS (right shoulder slope) = (6'x3:1)

W (width of roadway) = 22.5

N = 3 - 48 inch diameter.

OL (order length) = {(DL x SL) + RW +(DR x SR)} N x 1.15

OL = {(7x2)+ 22.5 + (6x3)} 3 x 1.15

OL = {(14) + 22.5 + (18)} 3 x 1.15

OL = (545) 3 x 1.15

OL = 163.5 x 1.15

OL = 188ft. of 48" pipe.

c. Strutting. Because of the stress placed on corrugated metal pipe by large amounts of cover it becomes necessary to support pipes 48 inches in diameter or larger with struts.

(1) The table below gives the length and spacing for struts.

STRUT SPACING FOR NEST ABLE (CMP)

DIAMETER (IN)	LENGTH OF STRUT (IN)	FILL HEIGHTS (FT) 5-10	10-20	20-30
		SPACING OF STRUTS (FT)		
48	37.5	6	6	6
54	43.6	6	6	6
60	49.8	6	6	6
66	56.0	6	6	6
72	62.2	6	6	5

(2) The other materials for strutting will be:

(a) One lower sill, 4" X 4" lumber.

(b) Two upper sills, 4" X 4" lumber with joints staggered on alternate struts.

(c) Vertical struts, 4" X 4" lumber.

(d) Jack struts, 4" X 4" lumber shortened to accommodate the length of the jack.

(e) Compression caps, not less than ten inches long to provide enough room for the vertical strut and the jack strut.

(f) Bearing blocks, large enough to support the bottom of the jack being used.

EXAMPLE: You have three 48 inch pipes 76 feet in length.

(g) Lower sill, 3 @ 76' X 4" X 4" = 228' of 4 X 4

(h) Upper sill, 6 @ 76' X 4" X 4" = 456' of 4 X 4

(i) Vertical strut, every 6 feet = 13 X 3 = 39, 39 X 37.5 = 1462.5" = 122' of 4 X 4

(j) Jack strut, 4(37.5" - 18") = 78" = 6'6" of 4 X 4

(k) Compression caps, 4(2 X 10 X 10") = 40" of 2 X 10

(l) Bearing blocks, 4(2 X 10 X 10") = 40" of 2 X 10

(m) Total lumber, 812' 6" of 4 X 4, 6' 7 3/16" of 2 X 10

11. EROSION CONTROL METHODS.

a. Ditches. There are several methods of erosion control used in ditches. The primary concern is to slow the water down. However, water that runs too slow will cause drainage systems to clog and ultimately fail. The desirable gradient for a ditch is between 0.5 percent and 2 percent. Ditches with a gradient greater than 2 percent will require erosion control.

(1) Ditch lining. Ditches may be lined to prevent erosion. The use of concrete, asphalt, rock and mortar will not decrease the velocity of the water by any great degree, but it will protect the soil. The use of grass will not only help to protect the soil but it will also reduce the velocity of the water. Grass seed is cheap, and is normally available at the construction site. Concrete, asphalt, rock and mortar can be rather expensive and will not be readily available.

(2) Check dams. Check dams are nothing more than small dams built from logs or heavy timbers that reduce the gradient of the ditch.

(a) Timbers. The timbers should be six to eight inches in diameter or square. They will be set at least two feet into the sides and bottom of the ditch. In addition, they will be joined with drift pins and held in place by piles. The piles will be on both sides of a notch in the center of the check dam. The notch is called a weir notch.

(b) Weir notch. A weir notch will be cut in the center. Normally the weir notch will be a minimum of six inches deep and twelve inches wide. Naturally a larger dam will have to have a larger weir notch.

(c) Rock apron. A rock apron made of rip-rap will be placed in front of the dam, and should extend four feet in front of the dam for every one foot of dam height.

(d) Top of dam. The top of the check dam should be placed at the high water mark on an existing ditch. A new ditch will not have a high water mark, so the top of the check dam will be placed one foot below the top of the ditch.

(e) Dam spacing. Check dams will have a minimum spacing of 50 feet. To reduce construction effort the dams should be placed as far apart as possible, while achieving the desired gradient.

S = Spacing in feet.

A = Present ditch gradient.

B = Desired ditch gradient.

H = Height of check dam.

100 = Converts to percentage.

$$S = \frac{100(H)}{A - B}$$

% Gradient = (Rise/Run) 100

(f) Check dams should be checked periodically to allow the free flow of water.

STUDENT REFERENCES:

FM 5-430-00-1
MCRP 3-17A

UNITED STATES MARINE CORPS
COMBAT ENGINEER INSTRUCTION COMPANY
MARINE CORPS ENGINEER SCHOOL
PSC BOX 20069
CAMP LEJEUNE, NORTH CAROLINA 28542-0069

C-23B05
22 Jun 00
(98 POI)

STUDENT OUTLINE

RAPID RUNWAY REPAIR

INTRODUCTION

1. PURPOSE: The purpose of this period of instruction is to provide you with the basic knowledge and skills necessary for rapid runway repair.

2. LEARNING OBJECTIVES:

a. TERMINAL LEARNING OBJECTIVE. Given a list of available personnel, tools, equipment, matting, a description of airfield damage including drawings or photographs of damaged areas with critical dimensions shown, the minimum operating strip (MOS) required, drawings, blueprints, or specifications for the airfield, and FM 5-34, determine the procedures required to repair the airfield in accordance with FM 5-34, and FM 5-104 (1371.2.18)

b. ENABLING LEARNING OBJECTIVES:

(1) Given a description of airfield damage that includes drawings or photographs of damaged areas with critical dimensions shown, and drawings, blueprints, or specifications for the airfield, perform damage assessment per the references. (1302.1.27a)

(2) Given a description of airfield damage that includes drawings or photographs of damaged areas with critical dimensions shown, and drawings, blueprints, or specifications for the airfield, determine the types of repair required for each damaged area per the references. (1302.1.27b)

(3) Given a description of airfield damage that includes drawings or photographs of damaged areas with critical dimensions shown, and drawings, blueprints, or specifications for the airfield, estimate the resources required to repair the airfield in accordance with the references. 1302.1.27c)

(4) Given a simulated damage airfield, tools and equipment, as a member of a team, repair the airfield in accordance with the references. (1302.1.27d)

l. PURPOSE OF DAMAGE ASSESSMENT:

a. Before any repairs can be accomplished, it is essential that an effective damage assessment operation be completed.

b. Station or Squadron repair teams must know what areas are damaged, the extent of the damage and what will be required to repair the damages.

c. A rough initial estimate of damage can be obtained by observations from good vantage points around the base. This includes:

(1) Control towers, and reports by flight line observation posts.

(2) Security police and other organizations.

(3) If available, helicopters might be used to conduct aerial reconnaissance and damage assessment.

d. A more detailed assessment of damage requires the dispersal of Damage Assessment Teams (DATs) to evaluate specific destruction.

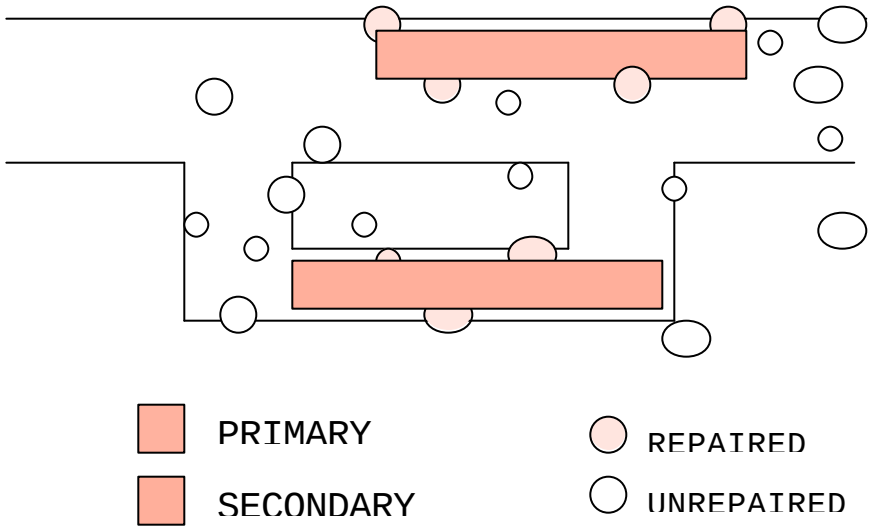

2. TYPES OF DAMAGE ASSESSMENT. Damage assessment activities may be separated into two distinct areas. They are:

a. Runway Damage Assessment (airfield)

(1) This involves the assessment of damage to runway, taxiway, aircraft parking apron surfaces, and any other collateral damage encountered.

(2) During runway damage assessment; the location, types, quantity of unexploded ordinance and airfield pavement damage are determined and reported to the MOS selection team.

(3) The MOS selection team uses this information to determine potential Minimum Operating Strips (MOSs). (FM 5-34 pg 8-11)

(4) The potential MOS list is relayed to the station command center which selects the **M**inimum **A**irfield **O**perating **S**urface (MAOS) that must be cleared and repaired to restore the operational capability of the air base.

(a) The MAOS consists of the MOS, the supporting taxi ways, access routes, and parking aprons needed to launch and recover aircraft.

(b) Since major recovery tasks cannot be started until damage assessment and MAOS selection is completed, speed and accuracy during damage assessment is essential.

b. Facility Damage Assessment (base):

(l) This includes assessment of all air station facilities and utilities.

(2) The facility Damage Assessment Teams (DATs), should inspect the highest priority facilities first to determine the feasibility of repairing the facility. As directed by **S**urvival **R**ecovery **C**enter (SRC). SRC provides information and advice to wing/base command staff on base recovery activities. Provides command and control for **B**ase **C**ivil **E**ngineer (**BCE**), under which engineers fall.

(3) The DATS should develop a repair estimate for the facility which includes an estimate of the labor, materials, and equipment required to accomplish the repairs.

3. DAMAGE ASSESSMENT OPERATIONS:

a. Resources and manpower permitting, both runway and facility damage assessment operations should be conducted simultaneously.

b. To shorten air base restoration time, the damage assessment operations and Explosive Ordinance Disposal/Unexploded Ordnance, (EOD/UXO), assessment operation should be done concurrently.

c. Thus, the DATs are task organized to conduct ground assessments of UXO locations and bomb damage either on foot or from vehicles.

4. DAMAGE ASSESSMENT PRIORITIES:

a. The station Battle Damage Repair/Rapid Runway Repair (BDR/RRR) plan should provide the damage assessment priorities of the various station facilities.

b. The Squadron should integrate those priorities in its RRR plan and DAT assignments.

c. In general, the priorities of the areas to be assessed will most likely be:

(1) Runways and taxi ways, aircraft maintenance facilities, aircraft parking, loading, and refueling areas. In these areas, all craters, spalls, and UXO must be reported. (craters, spalls, UXO, will be discussed later).

(2) Station command and control, and communications facilities.

(3) Key utility substations or facilities.

(4) Medical and decontamination facilities.

(5) POL storage and pumping facilities.

5. DAMAGE ASSESSMENT TEAM (DAT) COMPOSITION. The Squadron should assign personnel to serve on the DATs as required by the station's BDR/RRR plan.

a. RRR DAT (airfield) Composition

(1) The DATs should normally consist of:
(a) One EOD technician.

(b) One Public Works or **A**ir **O**perations **R**epresentative (AOR).

(c) Three Engineers or Squadron personnel to aid the assessment, record information, and communicate data to the MOS selection team.

(2) The EOD expertise is necessary to accurately identify and classify UXO and oversee the activities of the DAT in the hazardous UXO environment.

(3) The senior member of the team will normally be the team leader.

(a) Regardless of grade, the EOD technician will direct the teams movement through areas with UXO.

(b) Facility DAT Composition

(1) The facility DATs should have at least:

(a) One electrician/utilitiesman.

(b) One carpenter/builder (1371).

(c) EOD and disaster preparedness personnel, (NBC). Because of the presence of UXO and chemical agents.

c. Manning will probably be limited during a contingency response, so the minimum number of persons necessary to evaluate damage should be assigned.

d. The station should have the primary responsibility for manning the facility DATs.

6. RRR DAMAGE ASSESSMENT INFORMATION. During RRR damage assessment, the DATS gather two types of information, pavement damage caused by ordnance and the location/description of UXO.

a. The location and description of pavement damage caused by bombs, scuttling charges, or cannon fire is categorized as follows;

(1) Pavement Damage Data.

(a) Pavement damage to potential MOS surfaces will be recorded on the same scaled drawings as the UXO reports.

(b) The following information is included in each report:

1 Damage type (crater, spall, etc.)

2 Location (by grid coordinates or in relation to known reference markers).

3 Size (crater diameter, spall field dimensions).

4 Number (of spalls in a field).

5 Estimating Crater Size and Location

(a) Airfields will have to be measured and marked in areas of 100 foot increments.

(b) Markers will correspond with the airfield grid coordinate system.

(c) Size of craters estimated by:

1 Pacing off

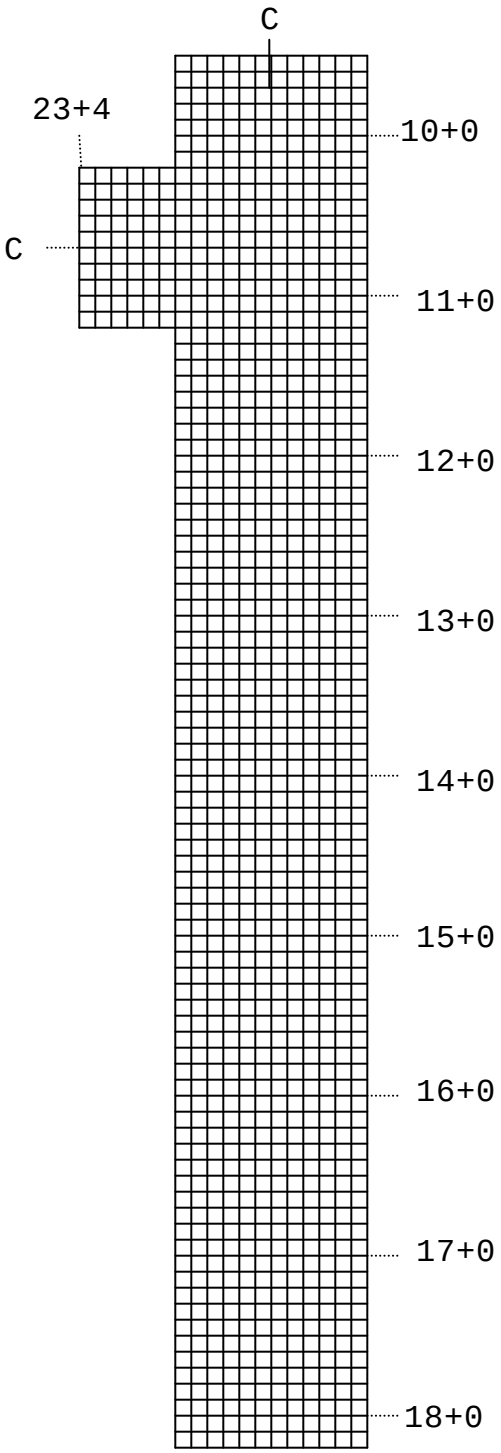
C
23+4
10+0
C
11+0
12+0
13+0
14+0
15+0
16+0
17+0
18+0

2 Actual measurement with a tape measure. Non-metal tape. You should not have any ferrous metal (sparking) objects or tools because of magnetically influenced firing devices.

(d) Report only "apparent" diameter. Width of hole in pavement at the widest point. Depth not required.

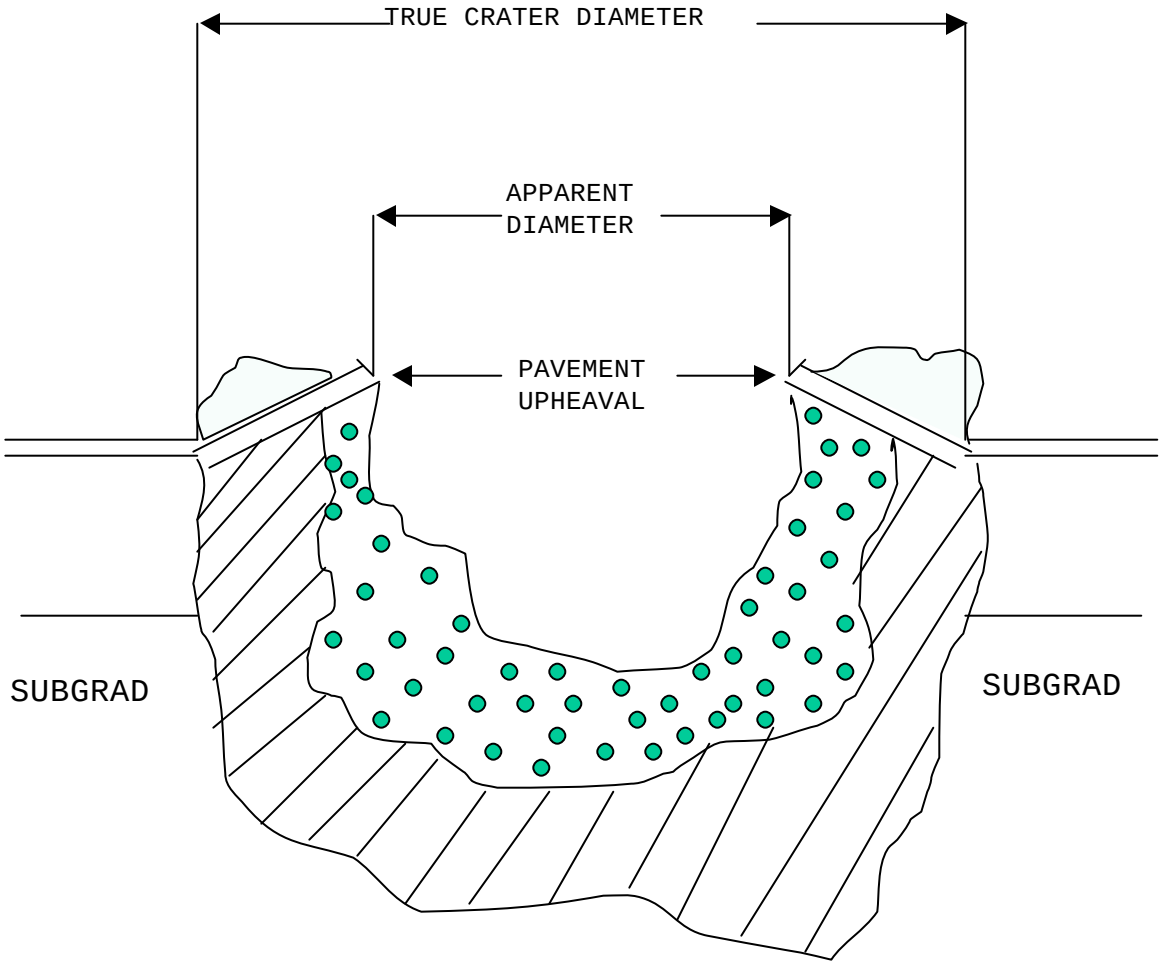

(e) The locations and descriptions of UXO.

(1) UXO Data required:

(a) The UXO that may influence aircraft operations must be accurately located, reported, and recorded in sufficient detail for the Station Command center to determine the risk to aircraft operations.

(b) All UXO within 300 feet of repair operations or aircraft operating surfaces must be identified.

(c) Holes of entry for subsurface UXO must also be reported.

(d) Scaled drawings must show sufficient adjacent area to include the 300 foot, UXO radius of effect zone for paved surfaces and Foreign Object Damage (FOD) cover assembly areas.

(e) The following UXO information is included in the DAT report:

1 Location

2 Size

3 Shape

4 Color

5 Distinctive Markings

6 Fuse type and condition

(2) Equipment required for recording UXO:

(a) An airfield map

1 Marked in grid coordinates

2 Scale 1 inch = 100 feet. This scale is used because the airfield should already be marked into 100 foot intervals and using one inch as a scale makes converting easy.

3 These plans and scale drawings could be pre-printed in the RRR plan.

(b) An armored vehicle or a "hardened" vehicle (e.g. blade tank, D7-G with armor protective kit, ACE, etc.) for removing or working around UXO.

(c) Communications equipment:

1 Radios or other reliable means to maintain contact with the Command Post/Damage Control Center, (CP/DCC), and report damage/UXO locations.

2 Hand held radios, one (l) per assessor is ideal.

(d) Measuring tapes (100 foot)

(e) Marking Stakes/Engineer tape used for:

1 Marking UXO locations, etc.

2 Marking prospective access routes etc.

3 Marking "Safety" zones etc.

7. DAMAGE ASSESSMENT PRE-ATTACK ACTIONS:

a. Ensure that you have existing pavement markings on the runways/taxiway they most likely be destroyed or covered with debris after an attack.

b. The Squadron should fabricate a marking system consisting of large stakes for use as station markers (100 foot marks) to assist in determining the location of damage and UXO after an attack.

(l) The stakes should be installed prior to an attack and be placed far enough off the runway and taxi way surfaces so that they will survive an attack, but still be visible from the runway surface.

(2) In addition, the stakes should be placed at 100 foot intervals and have visible stations markings.

8. DAT COMMUNICATIONS:

a. The success of the damage assessment operation depends on dedicated communication links and strict communication procedures to ensure accurate transmission of damage information.

b. As a result, clear, concise radio transmissions using strict radio discipline are essential.

c. Each DAT should have a communications link to the Station and Squadron Command Centers.

d. We will cover proper communication procedures later in the lesson.

9. FILLING OUT AN EXPLOSIVE ORDNANCE RECONNAISSANCE (EOR) REPORT

a. Accuracy of every detail is the most important aspect of filling out an EOR Report. It must be filled out in such a manner that everyone concerned, especially the EOD Technicians, can understand it.

EXPLOSIVE ORDNANCE RECONNAISSANCE REPORT		
1.NAME:	**2.DATE:**	**3.TIME:**
4. ORGANIZATION:	**5. PHONE:**	
6. LOCATION OF UXO:	**7. GRID COORDINATES:**	
8.TIME OF UXO IMPACT:	**9. TYPE OF UXO:**	
10.TYPE OF FUSING. NOSE:	**TAIL:**	**TRANSVERSE:**
11. RADIOLOGICAL/CHEMICAL MONITORING RESULTS:		
12. HOLE OF ENTRY SIZE:	**13.TYPE OF SOIL:**	
14. ANGLE OF ENTRY:	**15. FALSE CRATER DIAMETER:**	
16. DIRECTION OF ATTACK:		
17. UXO LENGTH: OVERALL:	**BODY:**	**FUSE:**
18. UXO DIAMETER: OVERALL:	**BODY:**	**FUSE:**
19. ESTIMATED UXO WEIGHT:	**20. OVERALL COLOR:**	
21. COLOR BANDS:		**(SHOW DRAWING)**
22. COLOR OF MARKINGS:		**(SHOW DRAWING)**
23. TYPE OF STABILIZATION:		
24. ACCESSORY DEVICES:		
25. GENERAL DESCRIPTION: (USE YOUR OWN WORDS)		
26.SAFETY MEASURES TAKEN:		
27. PROTECTIVE WORKS IN PROGRESS/COMPLETED		

b. There are three (3) phases of filling out an EOR Report

(l) Phase 1: Pre-access Data

(a) All the information that can possibly be obtained before going into the damaged area.

(b) Information obtained from intelligence sources.

(2) Phase 2: Post Access Data

(a) Obtained upon gaining access to the damaged area.

(3) Phase 3: Pre/Post Access Data. Data that is obtainable as either pre or post access information from other teams.

(a) Block 26 - Safety measures taken or in progress

c. Post Incident Data

(l) Summary of information after DAT and EOD teams complete their mission.

d. Removal of sub-munitions

(1) Should not be considered by Engineer personnel.

(a) Operational necessity may require removal, if EOD Technicians are not available.

1 Only done under war time conditions.

2 Do not touch or try to remove by hand.

3 Use only hardened equipment.

4 Push or remove ordnance from area into a trench or hold and mark the area.

5 Observe all safety precautions as closely as possible.

e. You must now establish grid coordinates for locating and plotting of UXOs, Spalls, Craters, and any other hazards.

(1) Everyone must understand the grid system.

(2) Establish a "base line" if the taxiway/runway center line is unusable or unacceptable.

(a) Center lines should now exist on all airfields.

(b) Base line should run parallel to center line.

1 Either left or right of center line.

(c) Establish a "zero" or starting point.

1 All taxiways/runways should have a zero end.

2 Always start at the zero end.

(3) Establish letter designators for different words.

(a) C for Craters)

(b) X for UXO(s)

(c) S for Spall(s)

(d) R for Right

(e) L for Left

(f) D for Diameter

(g) W for Width

(h) F for Field

(i) N for Number of Spalls or UXOs

(J) MOS for Minimum Operating Strip

(k) CL for Center Line

10. ESTABLISHING, WRITING, AND COMMUNICATING COORDINATES FOR UXO(S), SPALLS(S), CRATER(S), AND OTHER HAZARDS:

a. UXO(s)

(l) Establishing the coordinates.

(a) Identify - "x"

(b) Measure in feet along the center/base line to the UXO. Example 1100 feet

(c) Determine if it is left or right center/base line and identify with "L" or "R".

(d) Measure in feet from the center/base line to the UXO. Example 35 feet

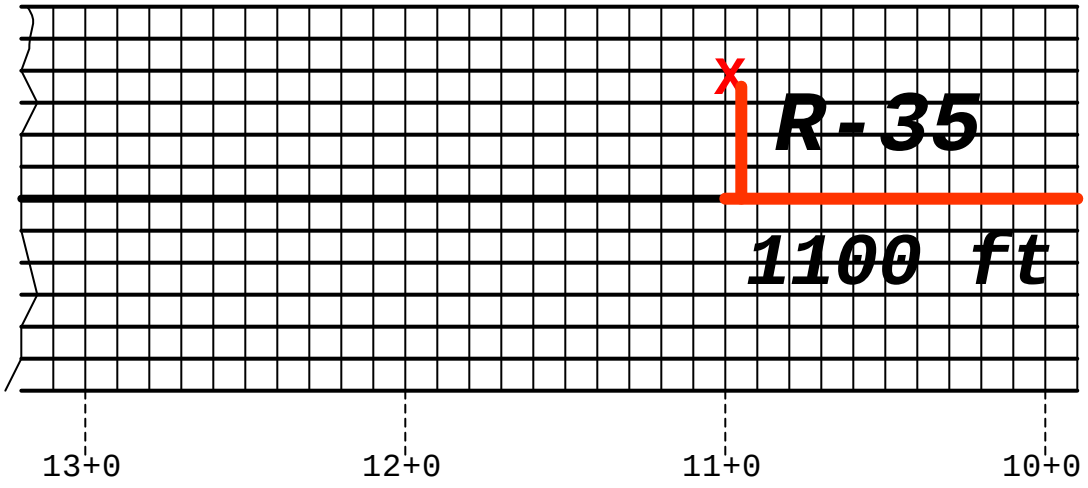

(e) Writing the coordinates

1 Xll00 - L35

2 Xll00 - R35

(f) Communicating (use phonetic alphabet in transmissions)

1 Example: X-RAY ONE ONE ZERO ZERO LIMA THREE FIVE

2 Example: X-RAY ONE ONE ZERO ZERO ROMEO THREE FIVE

b. Spall(s)

(l) Establishing the coordinates for l spall.

(a) Identify - "S"

(b) Measure in feet along the center/base line to the Spall. Example - 1200 feet

(c) Determine if it is left or right center/base line and identify with "L" or "R".

(d) Measure in feet from the center/base line to the Spall. Example - 35 feet

(e) Writing the coordinates

1 Sl200 - L35

2 Sl200 - R35

(f) Communicate. Use phonetic alphabet.

1 Saying: SIERRA ONE TWO ZERO ZERO LIMA THREE FIVE

2 Saying: SIERRA ONE TWO ZERO ZERO ROMEO THREE FIVE

(4) Establishing the coordinates for more than l spall.

(a) Identify - "S"

(b) Measure in feet along the center/base line to the first spall. Example - 1250 feet

(c) Locate the center of the damaged area.

(d) Determine if it is left or right center/base line and identify with "L" or "R".

(e) Measure in feet from the center/base line to the center of the damaged area. Example - 25 feet

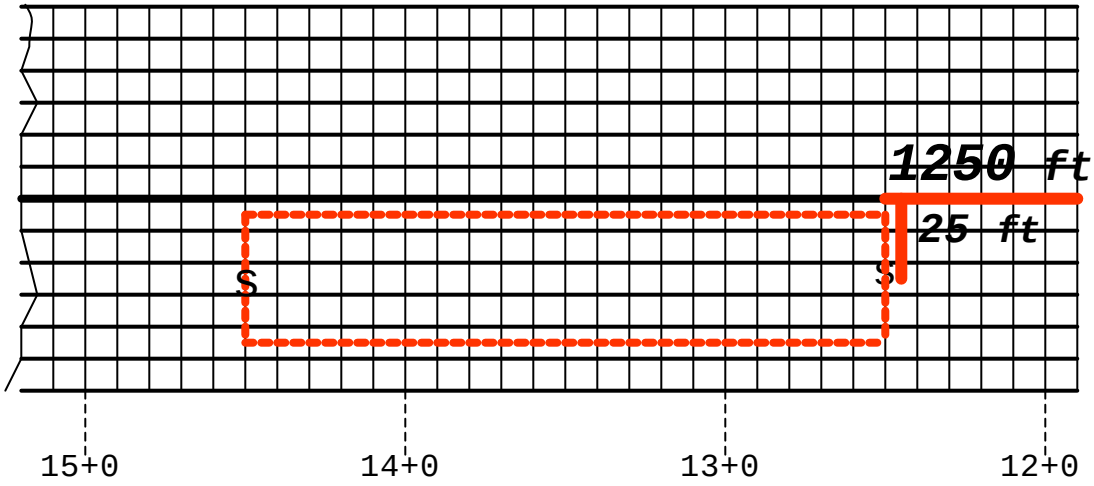

(f) Identify width - "W"

(g) Measure the distance in feet. Example - 40 feet

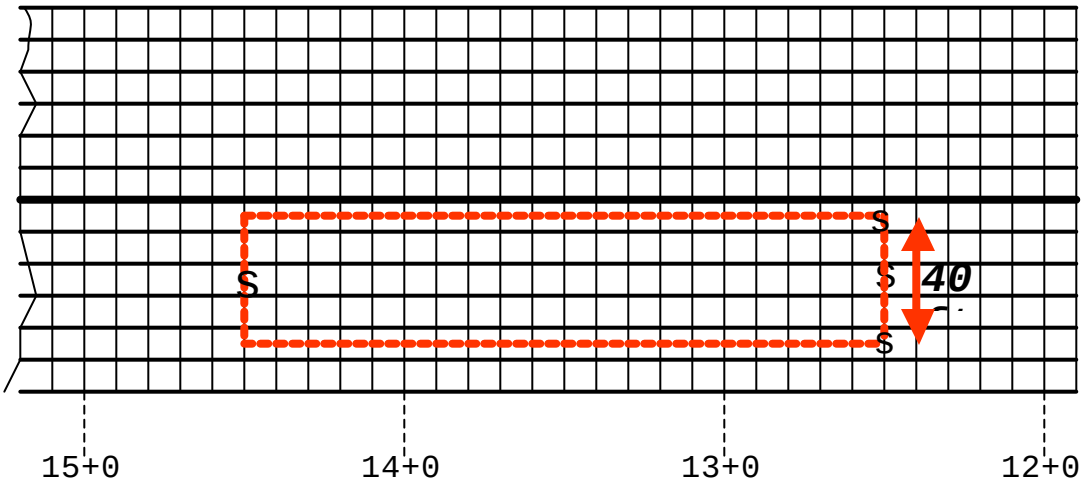

(h) Identify the field - "F" (distance to last spall)

(i) Measure distance in feet. Example - 1450 feet

(j) Locate the center of the damaged area.

(k) Determine if it is left or right center/base line and identify with "L" or "R".

(l) Measure in feet from the center/base line to the center of the damaged area. Example - 25 feet

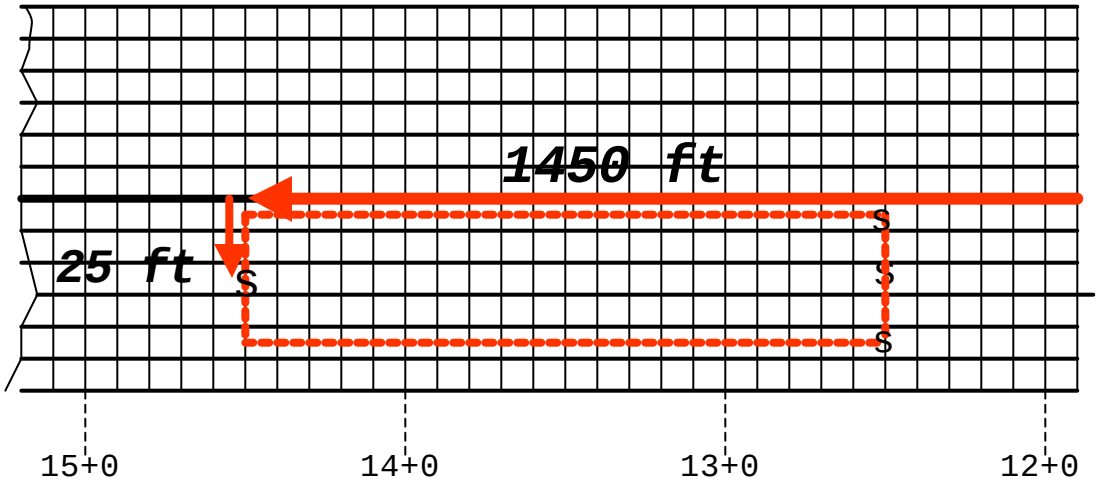

(m) Identify width - "W"

(n) Measure the distance in feet. Example - 40 feet

(o) Identify the Number - "N"

(p) Estimate or count to the best of your ability the total number of spalls.

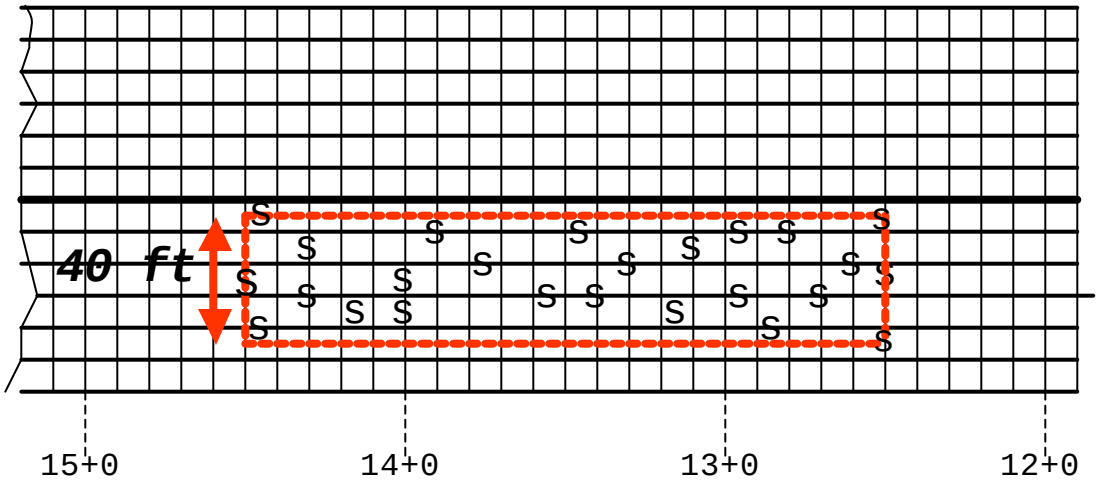

(q) Writing the coordinates.

1 S1250 - L25 - W40 - F1450 - L25 - W40 - N25

2 S1250 - L25 - W40- F1450 - R25 - W40 - N25

3 S1250 - R25 - W40 - F1450 - R25 - W40 - N25

c. BOMBLETS/Sub-munitions (UXOs)

(l) Establishing the coordinates for each bomb-let/sub-munitions.

(a) One is considered and plotted the same way as a large UXO.

(2) Establishing the coordinates for more than one bomb-let/sub-munitions.

(a) Identify - "x"

(b) Measure in feet along the center/base line to the first bomb-let/sub-munitions. Example - 1480 feet

(c) Locate the center of the covered area.

(d) Determine if it is left or right center/base line and identify with "L" or "R".

(e) Measure in feet from the center/base line to the center of the covered area. Example - 45 feet

(f) Identify width - "W"

(g) Measure the distance in feet. Example 30 feet

(h) Identify the field- "F" (distance to last bomb-let/sub-munitions)

(i) Measure distance in feet.

(j) Locate the center of the covered area.

(k) Determine if it is left or right center/base line and identify

(l) Measure in feet from the center/base line to the center of the covered area. Example - 25 feet

(m) Identify width - "W"

(n) Measure the distance in feet. Example - 30 feet

(o) Identify the Number - "N"

(p) Estimate or count to the best of your ability the total number of bomb-lets/sub-munitions. Example - 25

(q) Writing the Coordinates:

1 X1480 - L45 - W30 - F1608 - R25 - W30 - N25

d. Craters

(l) Establishing the coordinates.

(a) Identify - "C"

(b) Measure in feet along the center/base line to the approximate center of the crater.
Example - 1152 feet

(c) Determine if it is left or right center/base line and identify with "L" or "R".

(d) Measure in feet from the center/base line to the approximate center of the crater.

Example 00 feet

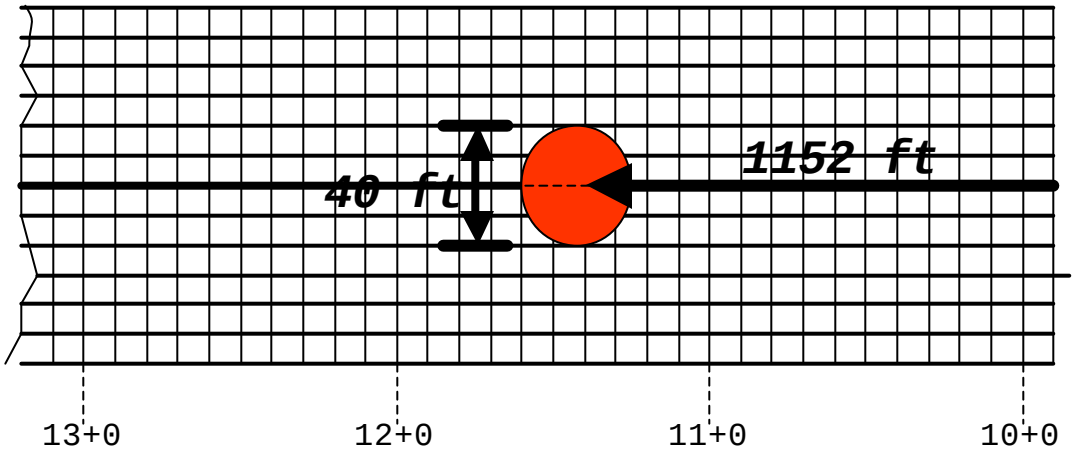

(e) Writing the coordinates.

1 Cl152 - L00 - D40
2 C1152 - R00 - D40

(2) Establishing coordinates for multi (overlapping) craters. They would be considered as one large crater. The diameter of the crater is considered to be the greatest distance across the damaged area.

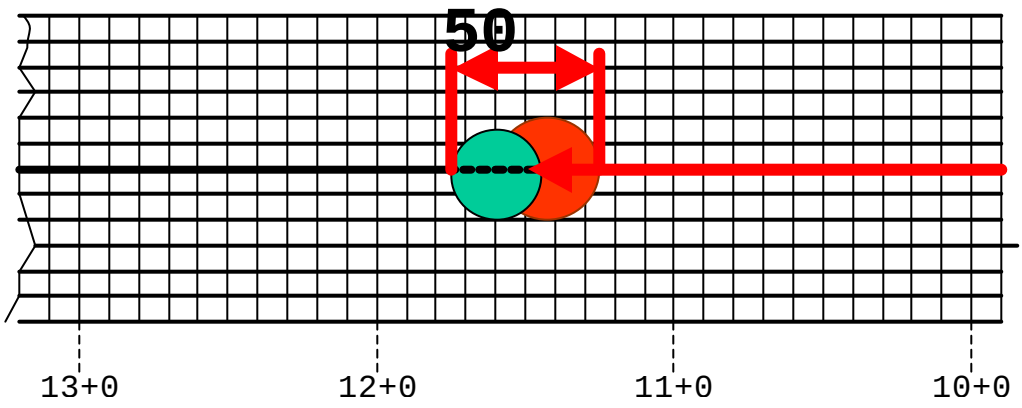

C1157 – R00 – D50

STUDENT EXERCISE: Determine the coordinates for the damaged airfield on the runway provided.

SPALL FIELDS

1.

2.

UXO FIELDS

1.

2.

3.

CRATERS

1.

2.

3.

4.

5.

6.

SPALLS

1.

2.

3.

4.

5.

6.

7.

UXO

1.

2.

3.

4.

5.

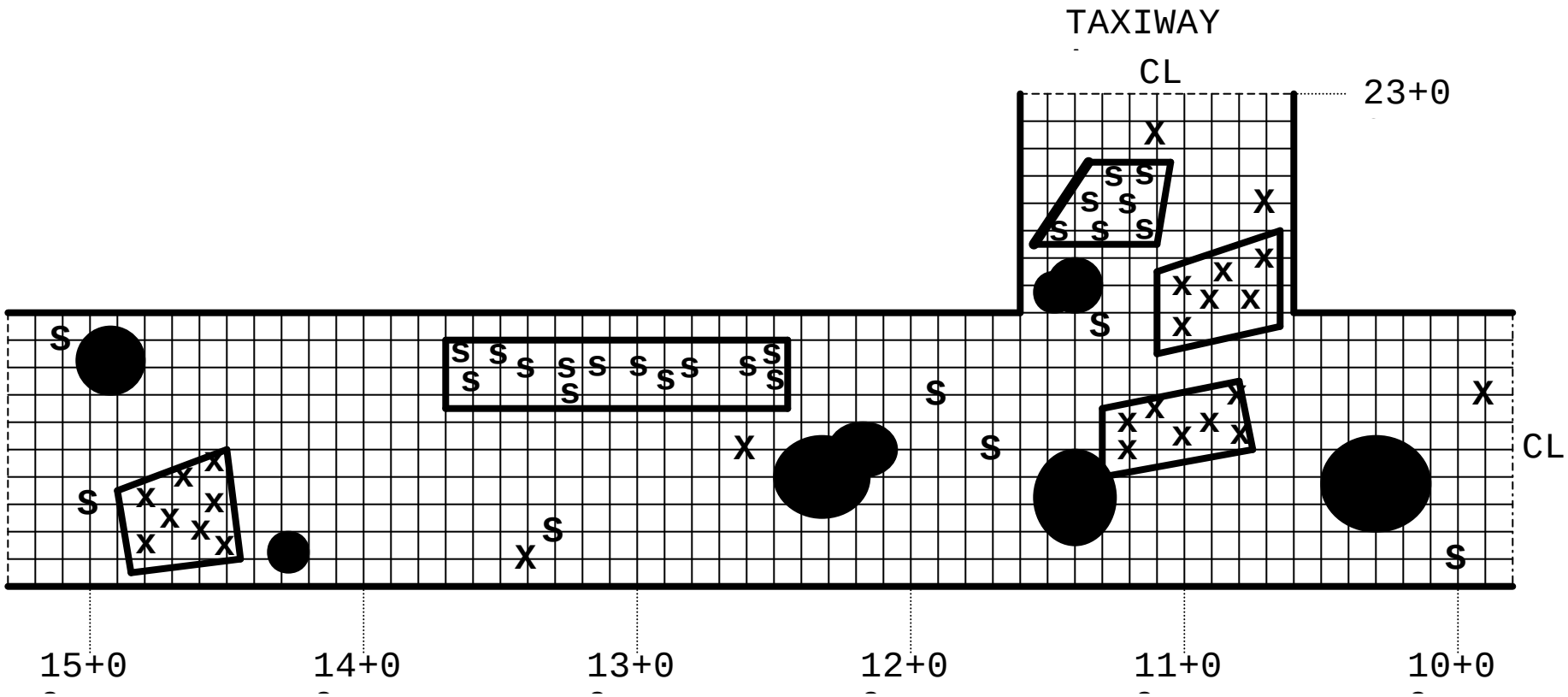
TAXIWAY
CL
23+0
CL
15+0
14+0
13+0
12+0
11+0
10+0

11. RAPID RUNWAY REPAIR METHODS:

a. The first step in determining how to repair damaged airfields is estimating the size of the damage or bomb hole. Once the hole has been measured and characterized you are ready to determine the proper type of repair to use for the hole. Although several methods of repair exist, we will focus on the methods the Marine Corps is currently capable of conducting.

b. REGULATED SET PORTLAND CEMENT (RSPC):

(1) Used for FOD cover crater repair.

(2) It must be batched from a cretemobile.

(3) It is used when crater contains water or if the debris is not suitable for use.

(4) Sequence of Repair:

(a) Break out and remove upheaval and ejects.

(b) Square the hole.

(c) Fill the crater with ballast rock to 10" of the surface.

(d) Lay down geotextile layer.

(e) Pour in RSPC

(f) Screed to surface.

c. SAND GRID CRATER REPAIR:

(1) Used when nothing else is available. (It will need a lot of rework)

(2) Sequence of Repair.

(a) Fill in 16" of the crater with ejects and debris.

(b) Lay down a geotextile layer.

(c) Install the first sand grid.

(d) Lay down another geotextile layer.

(e) Install the second layer of sand grid.

(f) Continue until the crater is filled.

(g) If the sand grid does not completely fill the crater, fill the remaining space with 1 1/2" minus crushed stone and compact.

(h) Cover with FRP matting.

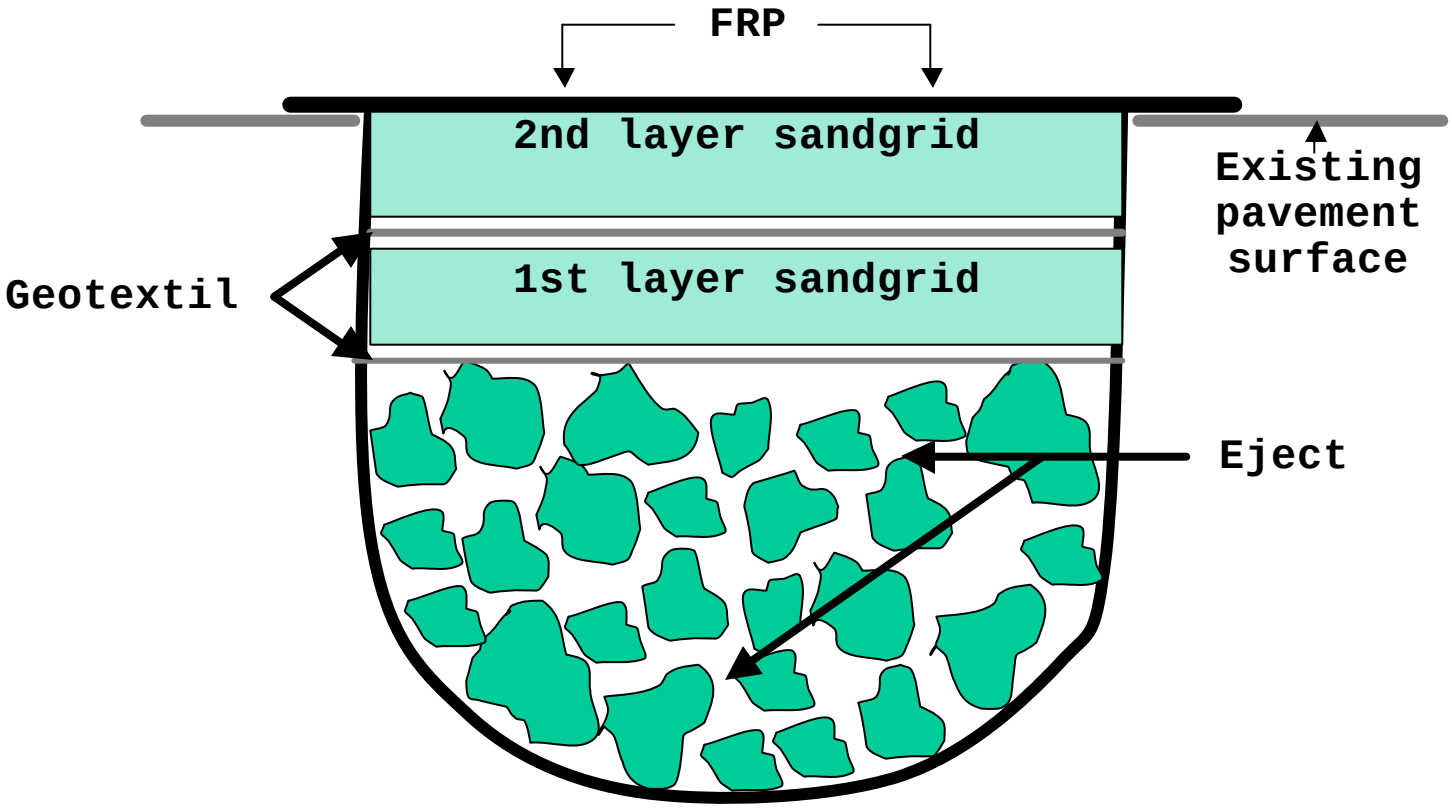

12. FIBERGLASS REINFORCED PLASTIC:

a. Also called fiberglass reinforced polyester or polyurethane. (FRP)

b. Used as a FOD cover.

(1) FOD covers help to keep rain from seeping into and weakening water susceptible fill materials and to reduce the depth of ruts caused by aircraft traffic.

(2) They also provide some structural load bearing capacity.

c. General Characteristics of FRP

(1) Made of two (2) or more layers of fiberglass impregnated with either polyurethane or polyester resin.

(2) They are 1/4 to 3/8's of an inch thick.

(3) FRP mats are damaged by long exposure to fluids, particularly paint remover and petroleum hydraulic fluids and ultraviolet rays.

13. NAVFAC P36 RAPID RUNWAY REPAIR COMPONENT: This component consists of construction equipment and materials designed to repair bomb damage to airfield pavements. It is at this time being fielded at MWSS's, USMC Engineer school, and other services for testing.

a. One P36 for each airfield to be repaired.

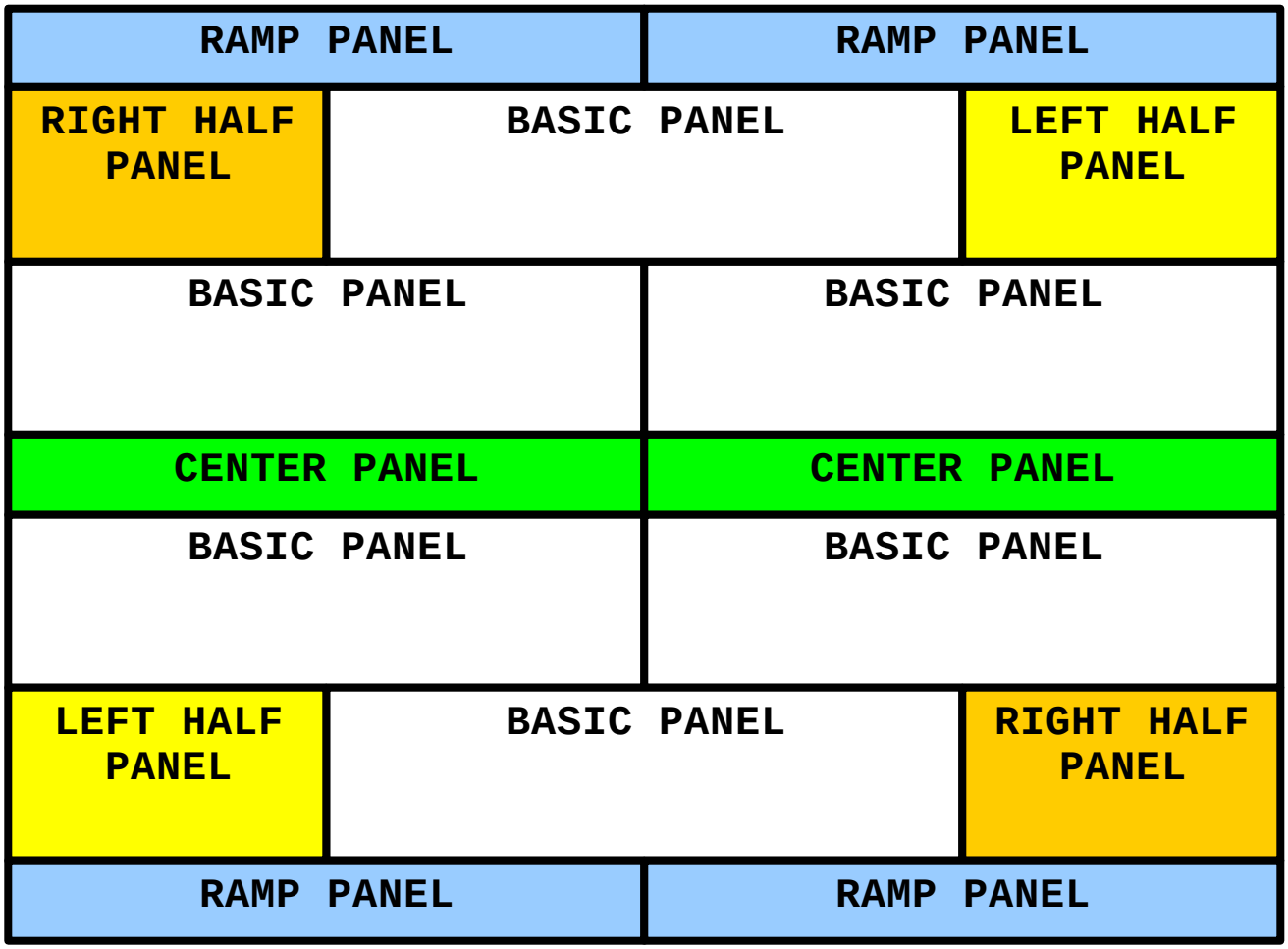

BASIC FRP

b. The P36 will include 9 war damage repair kits. Each kit will contain the materials and tools to repair and anchor a crater, up to a 60' diameter.

c. The P36 also contains war damage repair kit for airfield lighting.

(1) It is intended to be used as a temporary repair kit to fill any gaps in the existing system caused by battle damage.

(2) Critical material to restore the existing system to full operational condition is assumed to be stocked piled by the activity concerned.

14. FRP PANELS. There are basically five types of panels that make up FRP matting they are:

a. RAMP PANELS. The ramp panels are approximately 18'x 3' and are the last panels to be put in place.

b. CENTER PANELS. The center panels are approximately 18' x 3' and are the first panels to be put into place.

c. BASIC PANELS. The center panels are approximately 18' x 6' and are placed along the center panels.

d. LEFT HALF PANELS. The left half panels are approximately 6' x 9' and weigh approximately 150 lbs, the panel is placed so that the left edge is flush with the outside edge of the patch.

e. RIGHT HALF PANELS. The right half panels are the same as the left half panels except that the right edge of the panel is flush with the right outside edge of the patch.

15. SEQUENCE OF CONSTRUCTION: Start from the center and work out.

a. Place the center panels down, align and bolt together.

b. On either side of the center panels place two basic panels, align and bolt to the center panels.

c. On the opposite side of the center panels that the two basic panels are bolted to, place one left half panel, one basic panel, and one right half panel align and bolt to the center panels.

d. The last panels to be put into place are the ramp panels that are placed at both ends of the patch and bolted to the final row of panels.

e. After the ramp panels are placed on the patch, attach the towing equipment to the ramp panels and pull the patch over the hole or crater with the ramps facing traffic.

f. Once the mat is in place, anchor it to the runway using the anchoring equipment provided in the RRR kit.

g. The matting will be placed starting with four 12' sheets and one 6' sheet at the end. The matting will always be placed from left to right facing the key lock.

(l) The mat should be placed into the starter key lock or matting at a 45 degree angle. This is to help in easy assembly of the AM-2 matting.

(2) Double check to make sure that the first two rows of matting and key lock are straight. Then split the mat crew and place a full row of matting on the other side of the key lock. Continue placing matting on both sides of the key lock until the patch is complete.

(3) Parallel pull attach towing panels which can be fabricated by drilling 1 1/4" holes in a piece of AM-2 matting to accommodate the shackles for attaching the towing slings. Attach the center of the panels 18' in from both ends of the patch. Then attach towing slings to panels and vehicles.

16. SPALL REPAIR METHODS AND MATERIALS.

a. A spall or scab is defined as a cavity in a pavement that does not reach the base course material and results in a pavement damage area no greater than 5' in diameter.

b. What causes spalls?

(1) Small caliber artillery fire, small rocket fire, or other small caliber contact fused munitions.

c. What are we going to use?

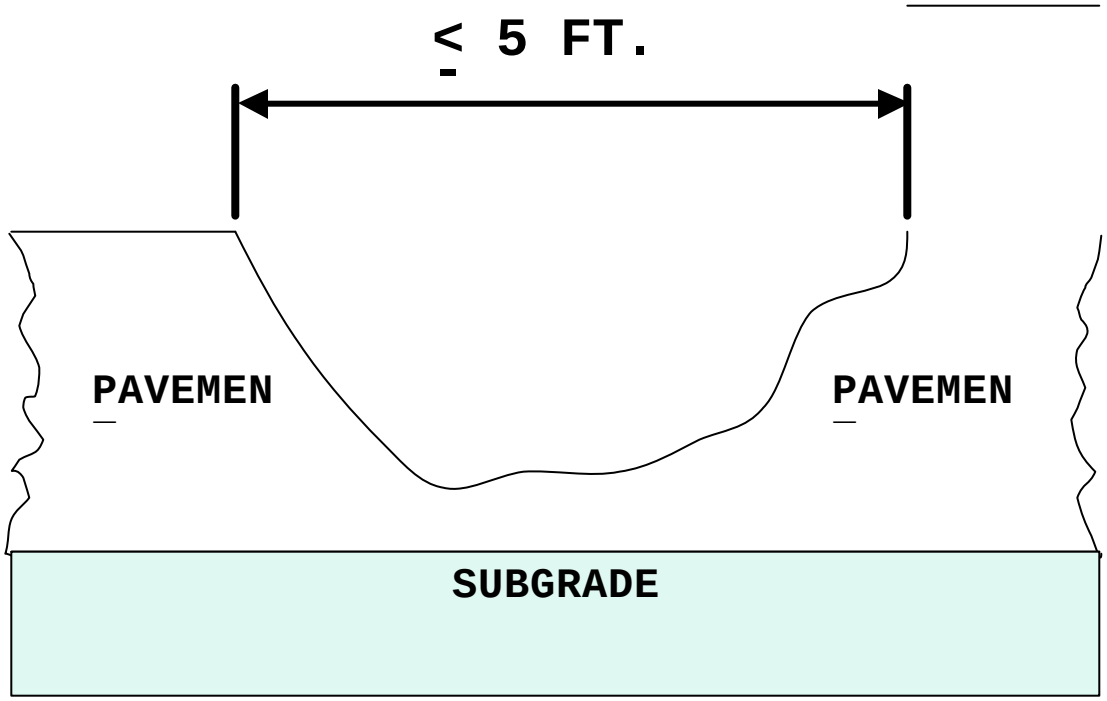

SPALL

(1) There are four types of materials that are generally accepted to repair spalls: only the RSPC is readily available the others need to be planned for and ordered threw supply systems.

(a) Silica

(b) Cold Patch Asphalt

(c) Magnesium Phosphate

(d) Regulated Set Portland Cement (RSPC)

17. SAFETY.

a. Chemical elements may be toxic and/or highly flammable and the following precautions should be taken:

(1) Properly attired

(a) Chemical resistant gloves - rubber

(b) Safety goggles

(c) Respirators

(2) Have an eyewash in the area.

(3) No eating at the repair site.

(4) If skin contacts chemicals, flush with water.

(5) Avoid breathing vapors.

(6) No smoking or spark producing devices within 50 feet.

(7) Have a chemical fire extinguisher nearby.

(8) Do not wear contact lenses when using this product.

18. SPALL PREPARATION.

a. Steps are as follows for repairs.

(1) Remove loose debris, ejects and excess water as required with the use of the following equipment:

(a) Air compressors

(b) Brooms

(c) Shovels

(d) Jack hammering equipment (recommended not to exceed 30 pounds in weight).

19. SPALL REPAIR MATERIALS.

a. Regulated Set Portland Cement (RSPC)

(1) Mixing procedures

(a) Load a concrete mixer, (6s, lls, or 16s).

1 50 lbs of sand.

2 50 lbs of pea gravel (if spall is deeper than 1 ").

3 Add 2 1/2 gallons of water.

4 Add retardant if required.

5 Mix ingredients.

6 Add air entrainment if required.

7 Add a bag RSPC (50 lbs).

8 Mix for 2 minutes but not more than 3 minutes.

(2) Application

(a) Discharge into spall.

(b) Trowel off flush to surface.

(3) Characteristics

(a) Initial set is 25 minutes in 75 degrees temperature. Quicker when hotter, slower in cooler weather.

(b) Traffic ready in two hours or less.

(4) Cleanup

(a) Trowels should be cleaned before concrete sets.

(b) Use water, acetone, methylenechloride, or trichlorethylene, depending on type of repair material used.

20. MAINTENANCE.

a. Replacement of repairs.

(1) As time dictates.

(2) When they show deterioration.

REFERENCE(S):

MCRP 3-17A\FM 5-34	ENGINEER FIELD DATA
FM 5-104	GENERAL ENGINEERING

UNITED STATES MARINE CORPS
COMBAT ENGINEER INSTRUCTION COMPANY
MARINE CORPS ENGINEER SCHOOL
MARINE CORPS BASE
CAMP LEJEUNE, NORTH CAROLINA 28542-0069

C-23B07
July 00
(95 POI)

STUDENT HANDOUT

VTOL/LZs

1. LEARNING OBJECTIVES:

a. TERMINAL LEARNING OBJECTIVE(S):

(1) Provided a mission, Forward Operating Base VTOL/HELO PAD/LZ construction requirements, and a list of personnel and equipment, with the aid of references, as a member of a team, direct the construction of a Forward Operating Base VTOL/HELO PAD/LZ, in accordance with FM 5-330. (1371.2.17)

b. ENABLING LEARNING OBJECTIVE(S):

(1) Provided a mission, completed engineer reconnaissance report forms, a map, and a construction directive, as a member of a team, determine the logistical requirements for constructing a Forward Operating Base VTOL/HELO PAD/LZ in accordance with FM 5-330. (1371.2.17a)

(2) Provided a mission, a map, a specified area, and tools and equipment, as a member of a team, determine if the area meets the specifications for a Forward Operating Base VTOL/HELO PAD/LZ in accordance with FM 5-330. (1371.2.17b)

BODY:

1. DEFINITIONS: The following definitions are directly related to this period of instruction.

a. Expeditionary Airfield: Airfields that utilize prefabricated materials such as AM-2 matting with accessories in there construction.

b. Vertical Takeoff and Landing (VTOL): A type of expeditionary airfield, which allows one aircraft to land or takeoff. Constructed with the AM-2 matting surface. Primary user of this facility is the AV-8B HARRIER

c. Landing Zones (LZ): A landing zone is an opened area on the ground used for helicopter operations. LZs are designated by a series of code names such as birds, animals, or trees. Landing Zones are divided into two areas: Landing Sites, and Landing Points.

d. Forward Operating Base: Platform designed to provide flexible AGS to the ACE of the MAGTF in an ever changing tactical environment. Airfields are further broken down into four classifications.

(1) Main Base: Secure airfield capable of handling all types of aircraft, up to and including theater lift assets. The Main Base should contain maintenance, and engineering assets to support anticipated needs. In most cases located near shore, and integrated into the MAGTF logistics pipeline. The function will be to support sustained operations ashore.

(2) Air Facility: A secure airfield capable of supporting a detachment or squadron of aircraft, and associated assets. Minor repairs, refueling, rearming, and de-arming can be accomplished at the air facility. The Air facility has little to no permanent structures. This facility may be an airfield, road segment, matted runway, or a grassy surface.

(3) Air Site: A secure location where aircraft are prepositioned to enhance response time. This area must be suitable for a fully armed and fueled aircraft to land, and await a mission. Fuel, and ordnance may be stored at this site, but a minimal number of personnel, and little to no logistical support will exist here. Upon completion of a mission from an Air site, aircraft would normally return to the Air Facility, or Main Base. Air sites are limited to receiving and launching previously loaded aircraft.

(4) Air Point: Air Points are tactical designations applied to a predetermined geographical location that will support a specific tactical mission. For the purpose of planning air points are further classified as either a FARP, or a Lagger Point.

(a) Forward Arming and Refueling Point (FARP): Provides fuel arming/de-arming necessary for mobile and flexible helicopter operations.

(b) Lagger Point: Secure locations designated by aviation units to be utilized for the rendezvous, marshaling or positioning of flights of aircraft between missions or when waiting for the completion or activation of an assigned mission. Only communication support is required. Lagger points can be isolated, or be adjacent to any of the previously mentioned facilities.

3. AIRCRAFT CHARACTERISTICS: The characteristics of the different types of aircraft utilized in the Marine Corps inventory is very important. The size of the aircraft will definitely affect the amount of area to be used, and also the amount of manpower and equipment to be used for construction of VTOL/HELO PADS/LZs:

CH-46E SEA KNIGHT

a. CH-46E Sea Knight Helicopter: The CH-46E is a twin turbine powered, tandem rotor helicopter. The primary mission of the CH-46E is to rapidly disperse combat troops, support equipment, and supplies from amphibious assault loading ships and established landing zones. The CH-46E general characteristics are:

(1) 50'each rotor

(2) Gross weight 15,452 lbs

(3) Overall length w/ rotors turning 85'

(4) Front height 11'9"

(5) Rear height 16'9"

(6) Range 350 miles

(7) Downwash 100 mph

(8) External cargo weight 5000 lbs

(9) 15 troops or 15 litters w/two medical attendants

Note: The CH-46E is considered a size 4 aircraft.

UH-1N HUEY

b. UH-1N Huey Helicopter: This twin engine helicopter is sometimes used for emergency resupply mission. It has an internal cargo space of 220 cubic feet and can lift a maximum of 2000 lbs externally. It has a seating capacity of 7 troops plus the pilot or 6 litters and an attendant. The UH-1N general characteristics are:

(1) Rotor 48'

(2) Gross weight 6,600 lbs

(3) Overall length w/ rotors turning 58'

(4) Range 316 miles

(5) Speed 135 knots

(6) Front height 13'4"

Note: The UH-1 is considered a size 2 aircraft

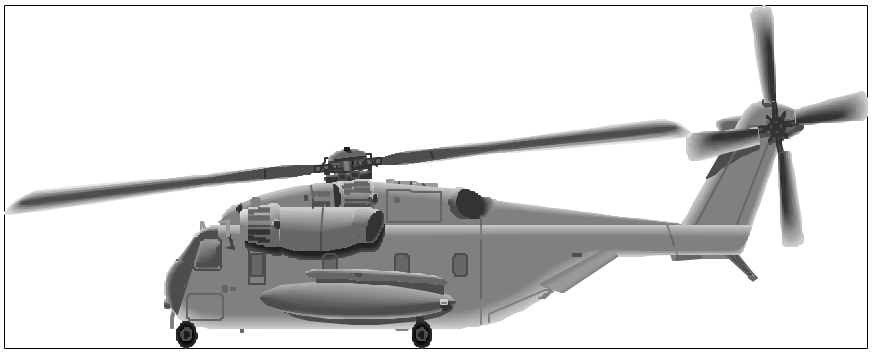

CH-53D SEA STALLION

c. CH-53D Sea Stallion Helicopter: The CH-53D is a single rotary wing, rotary rudder, dual turbine engine, assault transport helicopter. The primary helicopter is designed for both land and carrier based operation. The mission of the helicopter is the movement of cargo and equipment, and secondly, the movement of troops. The CH-53D general characteristics are:

(1) Rotor 73'

(2) Gross weight 23,000 lbs

(3) Overall length w/rotors turning 89'

(4) Range 250 miles

(5) Speed 175 knots

(6) Downwash 125 mph

(7) Front height 10'4"

(8) Rear height 8' 9"

(9) External 13,000 lbs

(10) Troops,(combat) 37 or 24 litters w/three medical attendants

Note: The CH-53D is considered a size 4 aircraft.

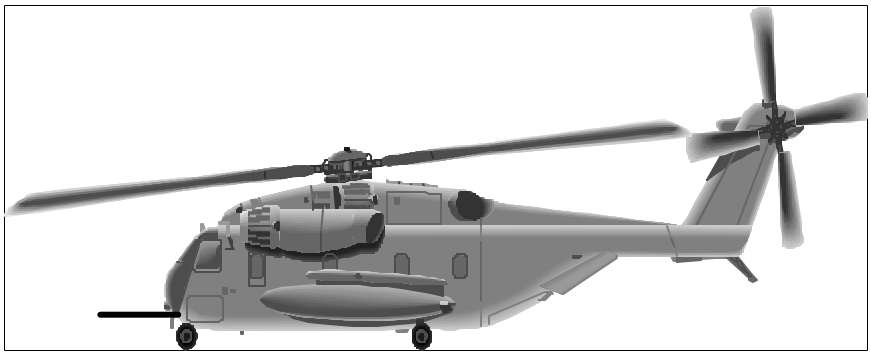

CH-53E SUPER SEA STALLION

d. CH-53E Super Sea Stallion Helicopter: The CH-53E is a single rotary win, rotary rudder, triple turbine engine assault transport helicopter. The helicopter is designed for land and carrier based operations with the primary mission of the movement of supplies and equipment. The CH-53E general characteristics are:

(1) Rotor 79'

(2) Gross weight 36,000 lbs

(3) Overall length w/rotors turning 99'

(4) Internal weight 23,500 lbs

(5) External weight 23,000 lbs

(6) Cruising speed 150 knots

(7) Maximum speed 170 knots

(8) Range with tanks 750 miles (two 650 gallon external tanks)

(9) Range with inflight refueling is unlimited

(10) Downwash 175 mph

(11) Front height 10'8"

(12) Rear height 9'1/2"

(13) Troop, (combat) 37 (up to 55 with center line seats installed) or 24 litters w/three medical attendants

Note: The CH-53E is considered a size 4 aircraft.

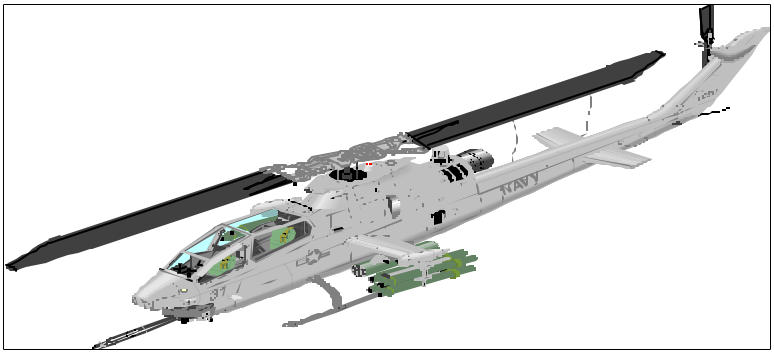

AH-1 COBRA

e. AH-1 Cobra Helicopter: The AH-1 is a twin engine, two seat, combat helicopter used for the escorting of other helicopters or in the role of attack and fire support for ground forces.

(1) Rotor 44'

(2) Gross weight 6,073 lbs

(3) Overall length w/rotors turning 53'

(4) Range 357 miles

(5) Speed 219 mph

(6) Height 13'5"

Note: The AH-1 is considered a size 2 aircraft.

AV-8B HARRIER

f. AV-8B Harrier: This is a fixed wing jet capable of vertical takeoff and landings. The Harriers primary mission is attack/close air support. This aircraft also serves as a sea-based defense system aboard amphibious assault ships such as LPHs, LHAs, and LHDs. The general characteristics of the Harrier are:

(1) Engine is capable of producing 21,500 lbs. of thrust

(2) Wing span 30'3"

(3) Length 42'11"

(4) Height 11'3"

(5) Weight: Empty 12,400 lbs, Maximum loaded 29,000 lbs

(6) Speed: subsonic

(7) Range w/arms 748 miles

Note: The Requirements for The AV-8B will be taught during the Vtol Pad construction portion of this class.

3. VTOL PAD CONSTRUCTION:

a. VTOL PADS are normally the first step in Expeditionary Airfield Operations (EAF) supporting the Marine Air Ground Task Force. The construction of a 96'x 96' landing pad is the requirement for supporting one helicopter or one AV-8B aircraft, an additional 150' must be cleared from each side of the pad, especially in heavily forested areas.

(1) AM-2 matting will be used as the surfacing material for VTOL pads.

(a) 20 F-71 pallets, 3 F-72 pallets and 1 F-28 pallet will be used to construct the pad.

1 F-71 pallet contains 18 2'x 12' sheets and 20 locking bars.

2 F-72 pallet contains 18, 2'x 6' sheets and 20 locking bars.

3 F-28 pallet contains 130 edge clamps, 120 stakes and 80 locking bars.

(2) Manpower/equipment and time requirements for laying mat:

(a) Mat laying data prepared by the Marine Corps Landing Force Development Center, indicates a mat laying rate of 12,000 square feet/6 hour shift, utilizing two 13 man crews; this equates to 2000 square feet per hour. A F-71 pallet contains 432 square feet of mat, therefore a 13 man crew should be able to lay 5 pallets in an hour, which is 90 pieces of mat. The formula for time to lay one mat is 60 minutes divided by 90 pieces of mat equals .66 minutes per mat or 39 seconds per.

(b) Maximum efficiency is working with a sixteen man crew. The breakdown of the crew is as follows:

1 One alignment man: aligns edges of each row of mats

2 Two prybar men: adjusts mat/inserts locking bars.

3 Six 2 man teams: working with partner, carries and lays mats

(c) Equipment and tools required varies depending on the location and the terrain the pad will be constructed on. At the minimum, the following equipment should be brought:

1 Shovels, sledgehammers, crowbars, 2 lbs. hammers, 100 ft. tapes, wooden blocks, forklifts, 250 CFM Compressor and rakes.

(3) Site Preparation: Once a site is selected a soils test is conducted to identify the type of soil the VTOL pad will be constructed over. The soil and sub-base materials should be suitable for use with the AM-2 landing mats. The sub-base material shall have a bearing capacity relative to a minimum California Bearing Ratio (CBR) rating of 4 or more. The CBR of various soils can be determined by identifying the characteristics in accordance with a comparable type listed in the Unified Soils Classification Systems (USCS) chart.

(a) In many cases there will be clearing work to be accomplished, specifically that of rocks and trees. The use of bulldozers, chainsaws and military explosives will be quite extensive in a theater of operation with this type of terrain.

(b) The terrain in the area to be utilized shall be leveled and rolled to provide a compact matting base. Grading shall provide adequate drainage of surface and rain water away from the field area. If possible the soil shall be disturbed a minimum amount in obtaining the prescribed finish to provide a soil of maximum bearing capacity. Any areas under the matting requiring installation of service or drain pipes or other objects shall be back filled and thoroughly tamped. The final grading operation shall be sufficiently level so that mats when laid shall *not vary more than 1/4" in height over a 12 foot distance.* Hand raking may be necessary to accomplish this condition.

(c) Once the earthwork is accomplished have the Engineer Assistants (1361s) perform a survey to establish lines for the first row and left hand edge of the pad.

(d) Site preparation may not be required if there is an existing concrete or asphalt surface. Matting may be laid over the hard surface.

(4) Pallet Deployment: Deployment of pallets should be such as to keep manual handling of mats and related components to a minimum. Deployment should be consistent with the available equipment, manpower, and conditions under which the installation is undertaken. Pallet deployment may be accomplished by either of the following general methods:

(a) Deployment of pallets by rough terrain forklift is the most desirable method. The forklift delivers the pallet directly to the mat laying crews. Pallets are disassembled while on the forklift and it remains until the pallet load has been installed. This method obviously will require a number of forklifts to continuously supply the crews with pallets. Pallet disassembly is

preferably done at the work area rather than at the storage area since loose mats are subject to spillage.

(b) On field deployment is the next method, and will probably be the one performed due to the shortage of forklifts. The pallets will be grouped on the field after major leveling operations have been completed. For a 96'wide pad, place the pallets in two rows 24 foot centerlines at 8 foot intervals. Arrange the appropriate edge clamp and stake pallet components around the edge of the pad for proper anchoring.

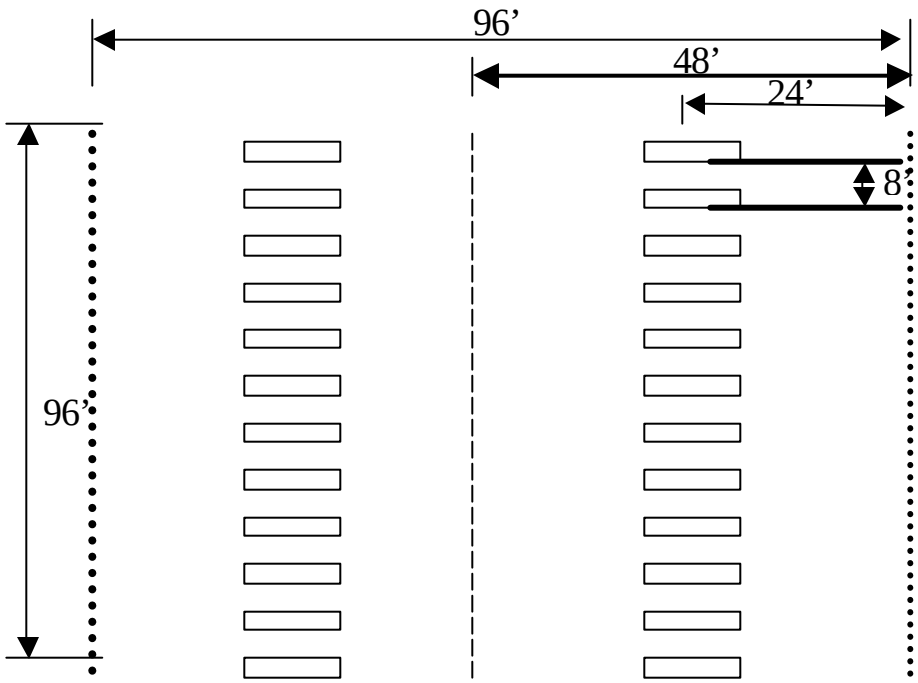

ON FIELD PALLET DEPLOYMENT

(5) Laying and Anchoring the Pad: The general sequence for laying matting is to start at one end and proceed in one direction. The individual mats are laid in a brickwork - type pattern from left to right. Always ensure that the edge of the mat is following the surveyors line.

(a) Edge clamps and stake assemblies are used to secure matting on all four sides. These anchor assemblies will be spaced 12 feet apart (fig.4). There are four types edge clamps in the F-28 pallet because of the four different edges of mat. The edge clamp required for each mat edge is:(fig.5).

1 9 - TYPE 1 clamps to anchor the female edge.

2 8 - TYPE 2 clamps to anchor the male edge.

3 8 - TYPE 3 clamps to anchor the downturned prongs.

4 8 - TYPE 4 clamps to anchor the upturned prongs.

(b) With the edge clamps in place, insert the anchor stake through the hole in the edge clamp, using a sledge hammer or paving breaker drive the stake into the ground.

Mat Laying Sequence

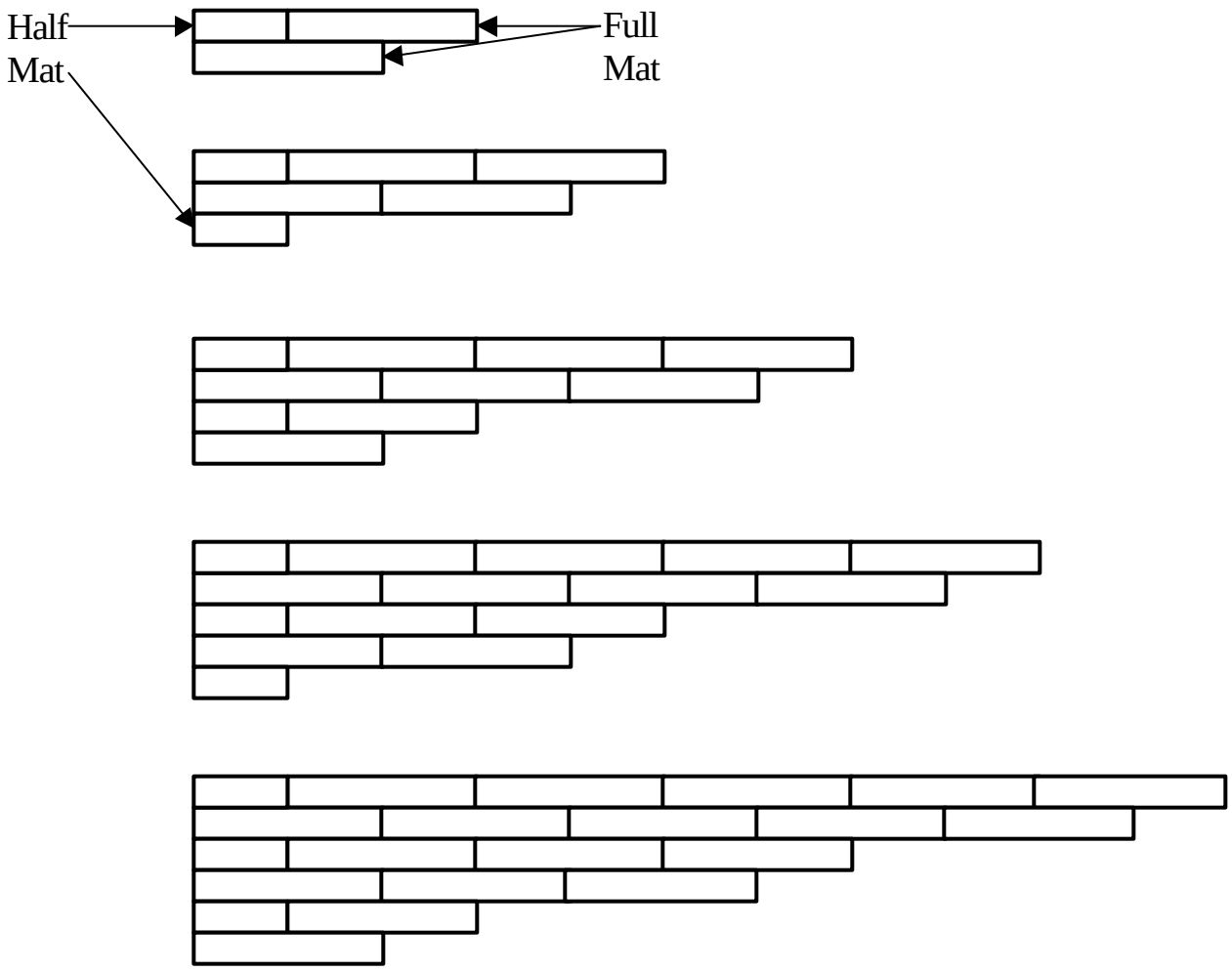

4. LANDING ZONE CONSTRUCTION: This type of facility, normally located in the battle area, represents the minimum cleared area at which a helicopter can land to discharge or pick up passengers and / or cargo under conditions existing at the time of use. Geometric requirements are kept to the absolute minimum.

a. Helicopter Landing Zone Layout:

(1) A landing zone (LZ) is the ground area used for landing a helicopter-borne force and its supplies. LZs are designated by code names such as birds, animals, or trees. The LZ will be broken down internally depicts the two areas of concern:

(a) Landing Sites: A landing site is a specified area in the LZ where one to four helicopters can land at the same time. Landing sites within the zone are used by the helicopter-borne unit as a tactical control measure to land certain subordinate units in specific locations. The number of landing sites required for a operation depends upon the mission, terrain, and number of aircraft using the zone. Landing sites are designated by an assigned color such as: green, blue, white, and yellow.

(b) Landing Points: A landing point is a specified ground area in the landing site where one helicopter lands or picks up a load. Landing points are designated by a two digit number.

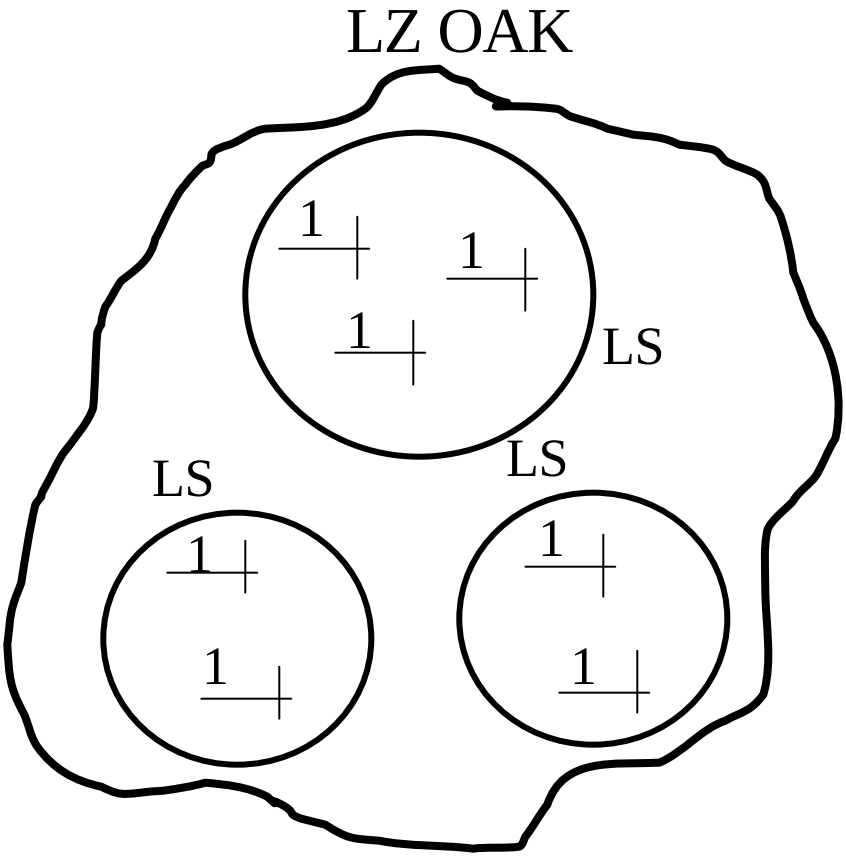

b. Landing Zone Selection: The supported or receiving unit commander, in coordination with the aviation unit liaison officer, if available, selects the location of the helicopter landing zone. The *aviation liaison officer* or *aircraft pilot* makes the final decision concerning the minimum requirements or the suitability of the zones. The following factors should be considered in the selection of a landing zone:

(1) Security and Concealment: If in a tactical situation, LZ's should be shielded from enemy observation by masking terrain or in wooded areas. Artificial camouflage measures should also be utilized to conceal the LZ.

(2) Convenience: Landing sites that are used primarily for supply or

resupply should be located near storage or supply points to reduce ground movement of cargo after it is delivered.

(3) Size: The appropriate LZ size is determined primarily by the type, and number of helicopters, and by the obstructions near or around the LZ. The area required for each landing point can be determined by comparing the helicopter size to the “BULLS-EYE” chart. This is the minimum size required for each landing point. To provide maneuvering space between helicopters, the distance between landing points should be 2 to 4 times the rotor diameter of the largest aircraft utilizing the landing point. This distance is measured from the center of each point. The height of the surrounding obstructions also effects the distance separating the landing points.

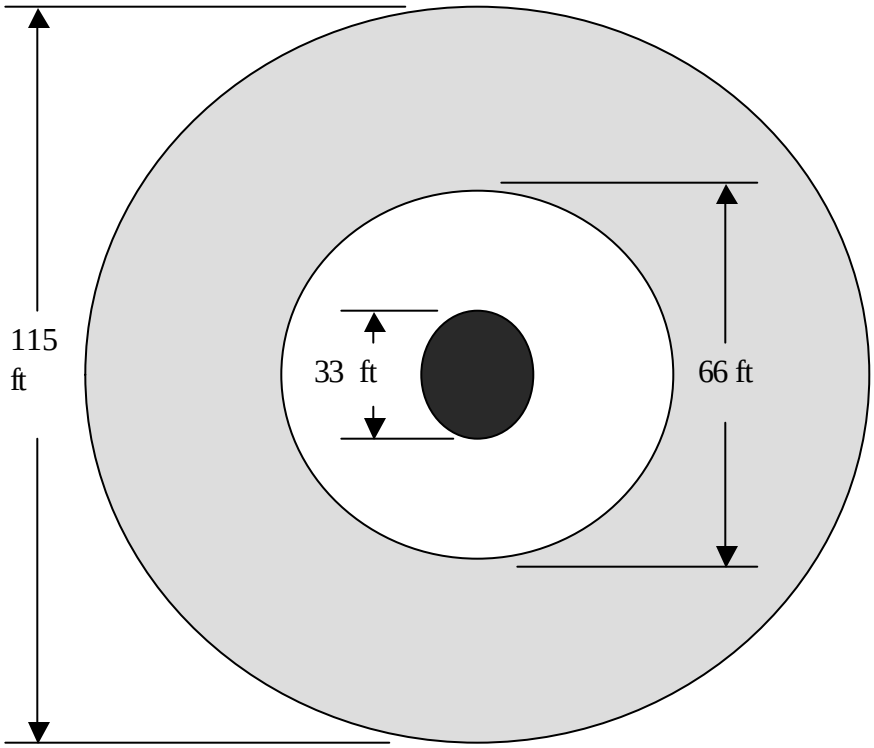

SIZE 2 Landing Point
Used for: UH-1,AH-1

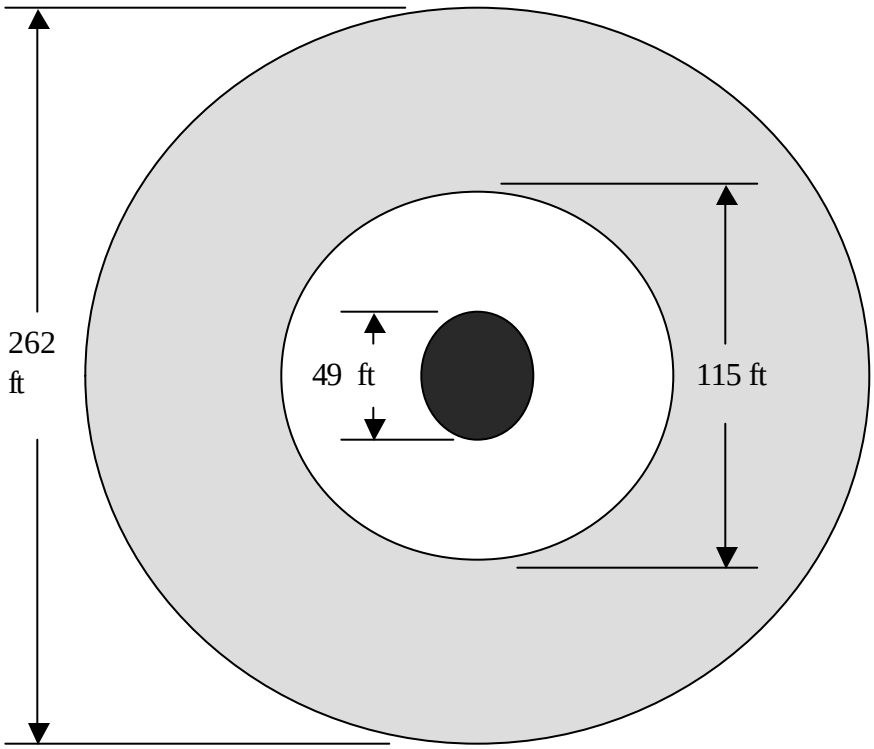

SIZE 4 Landing Point
Used for: CH-46E, CH-53D, CH-53E

(4) Approaches and Departures: It is not desirable to establish LZ's that require the helicopter to take off straight up and down; this decreases their allowable payload. In other words, once the load is well clear of the ground, the helicopter will require less power if it can takeoff with some forward airspeed. To allow this, landing sites should be clear of high obstructions (30 feet or higher) for at least 150 feet from the landing site. If the landing site is located where it is likely to be sheltered from the prevailing winds, the cleared area should extend to 300 feet. This increased area allows the helicopter to gain forward speed so that it can begin climbing without using all of its power. The rule that must be maintained is the 10:1 ratio rule. This means that for every one foot of obstruction height, there must be ten feet of distance from the center of the landing point. This ratio should be maintained for a distance of 1500’.

(a) Determining Obstruction Height: One field method for determining an obstructions height is known as the “Triangulation” or “Off Set” method. The procedure for performing the Triangulation method is:

1 Have one Marine stand at the center/base of the obstruction; For instance at the base of a tree.

2 Holding a straight object such as a pen at arms length, position yourself so that the tip of the pen is at the highest point of the obstruction, and the bottom of the pen is at the Marines feet.

3 Turn the pen at a 90 degree angle left or right. The base of the pen should still be at the Marines feet.

4 Have the Marine face 90 degrees to his/her left or right. Instruct the Marine to walk forward until his/her feet are at the tip of the pen and halt.

5 Mark the spot where the Marine stopped, and measure the distance to the base of the tree. This distance is equal to the height of the obstruction.

(5) Takeoff and Landing Direction: Since helicopters can takeoff and hover with less power when they are headed into the wind, landing sites should be set up to allow for a 12 o'clock wind direction into the helicopter. Otherwise adequate space should be provided at each landing point to maneuver the aircraft into the wind.

(6) Surface Conditions: Dry, barren areas should be avoided because they create dust clouds when the helicopter lands which can blind both the aircrew and the ground crew. In addition, the debris from the dust clouds could damage the helicopter engines. In general, areas of hard surface or grass make the best natural landing areas.

(7) Topography: Although helicopters can touchdown hover (one or two wheels are placed on the ground, but not all of the wheels) on any sloping ground which also provides the necessary rotor clearance on the uphill side, landing sites should be kept as level as possible. When selecting the landing site, the ground slope must be no more than 15 degrees. Helicopters cannot safely land on a slope of more than 15 degrees.

(a) When the ground slope is less than 7 degrees, the helicopter should land up-slope.

(b) When ground slope is 7 to 15 degrees, the helicopter must make a side-slope landing.

(c) The following two methods can be used to determine the slope of the ground:

DEGREE OF SLOPE = (VD X 57.3) ÷ HD

Where:

VD is Vertical Distance

57.3 is constant

HD is Horizontal Distance

PERCENTAGE OF SLOPE = (VD ÷ HD) X 100

Where:

VD is Vertical Distance

HD is Horizontal Distance

100 is constant

c. Preparation of the Landing Site: Each landing point must be level and firm enough to keep a fully loaded aircraft's landing gear from sinking into the ground. The ground is firm enough for UH-1 helicopters if it can support a 1 1/4 ton truck. If the ground can support a 5 ton truck, CH-46 and CH-53 helicopters can land without risk of sinking. The use of the trafficability test set (pentrometer) provides an accurate means of determining the soils carrying capacity.

(1) The entire landing point must be cleared of any loose material or debris to prevent it from being blown into the ground crew or rotor blades, or drawn into the helicopter engines.

(2) All trees, brush, stumps, or other obstacles that could cause damage to the rotor blades or the underside of the aircraft must be cleared around the landing points. If trees must be cut, stumps in the immediate vicinity of the landing points must not exceed 10" in height on level ground and less on sloping ground. All holes should be filled in or marked.

(3) It may be necessary to use axes, machetes, chainsaws, or demolitions to clear underbrush and trees.

(4) It may be necessary to prepare the ground with some form of soil stabilizer or other material such as matting to reduce the amount of dust raised by the helicopter rotor wash. Hard packed sod makes the best natural landing area.

5. Forward Arming and Refueling Point (FARP): Normally a temporary facility, transitory in nature, and established for a specific duration and mission.

a. Objective: The ultimate objective of the FARP is to minimize the response time, and reduce the turn around time of aircraft in support of sustained operations.

b. Location: Ideally the FARP will be located 10 to 15 miles from the Forward Edge of the Battle Area (FEBA). This positioning is far enough to the rear to prevent enemy artillery fire from targeting the FARP, yet allows for quick turn around time for aircraft and logistical transportation supporting the operation. Concealment of operation from enemy observation plays a large role in selection of the site. The final decision on the actual location of the FARP will be made by the user unit based upon analysis of the METT-TSL.

c. Construction Considerations: When construction of a FARP has been deemed necessary the following should be considered.

(1) Spacing Between Aircraft: The space between refueling points must be great enough to the largest aircraft expected to utilyze the facility. Normally all types of helicopters refuel at the FARP. Therefore, the standard layout should accommodate aircraft in size up to the CH-53E.

(2) Wind Direction: The FARP should be laid out so that aircraft can land, refuel and take off into the wind.

(3) Vapor Collection: Fuel vapors are heavier than air and will pool in a depression or hollow. If the ground slopes, arrange the FARP with the equipment on the higher ground.

(4) Drainage: Ensure that the area drains away from the FARP equipment, and refueling points in the event of a fuel spill or sudden rain fall.

(5) Foreign Object Debris (FOD): Ensure the area is clear of any loose debris or FOD producing material.

(6) Obsticals: The criteria for Landing Zone construction will apply in the take off, and landing zones. Further, ensure there are no protrusions or depressions exceeding 10 inches.

(7) Ground slope: Landing points within the FARP should not exceed 5 degrees.

(8) Soil: Utilize areas that provide minimum soil disturbance.

(9) Access Roads: When possible use areas that maximize available access roads. Roads should be capable of supporting a 5000 gallon refueling truck (max load) if trucks will be replenishing fuel stores.

d. FARP Layout: The FARP in broken down into 4 specific areas; The arming/de-arming area, pre-refueling area, refueling area, and post refueling area.

(1) Arming/de-arming area: Area in which aircraft will be de-armed prior to refueling.

(2) Pre-refueling area: Area where aircraft will position themselves when all refueling points are full. This area should be within visual range of the FARP, and be large enough to contain a division of aircraft. The use of this area will prevent aircraft from having to orbit the FARP. The size of the refueling area will be limited by the logistical capability of the supporting unit.

(3) Refueling area: Area where the actual refueling of aircraft will take place. The size of the refueling area will be limited by the logistical capability of the supporting unit

(4) Post-refueling area: Area for aircraft to stage themselves after they have refueled, and are waiting for their wingmen to join.

e. Considerations: The distances between the specific areas within the FARP should be great enough to avoid conflicts of airspace. The following are some recommended spacing, and layout designs.

FARP Layout

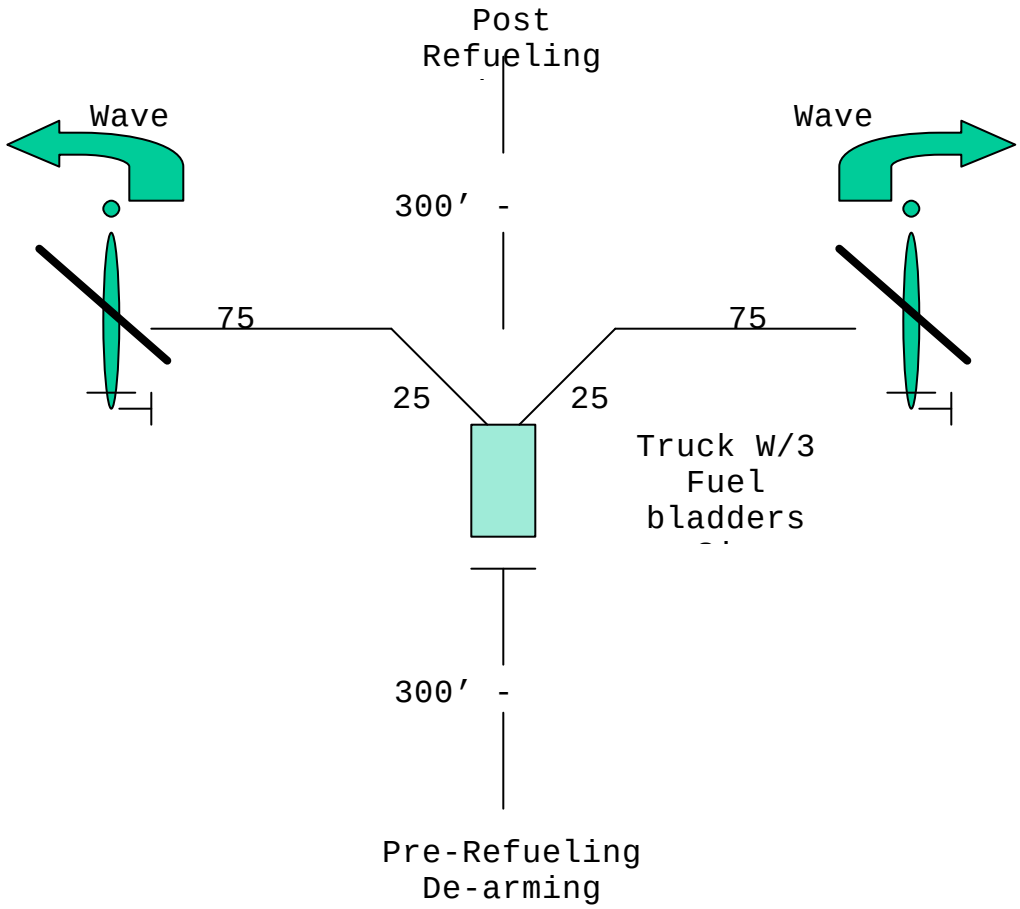
Post
Refueling
Wave
Wave
300’ -
75
75
25
25
Truck W/3
Fuel
bladders
300’ -
Pre-Refueling
De-arming

Pre-Refueling Area

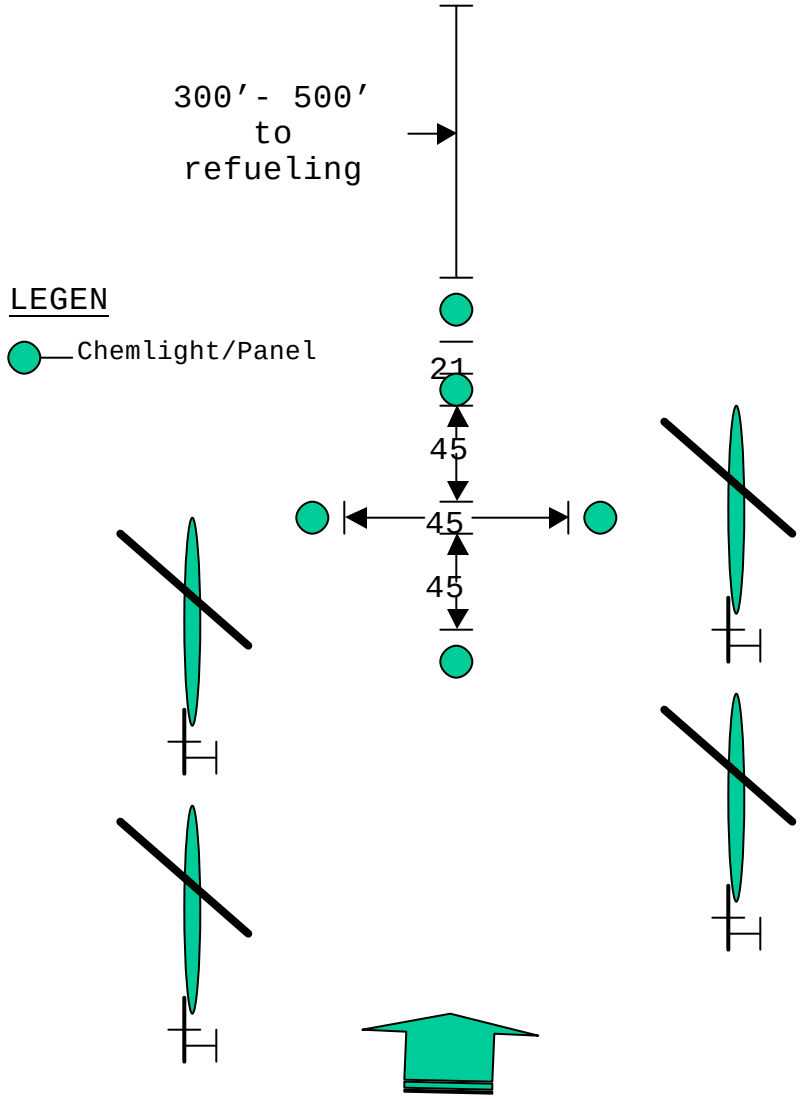

Post Refueling Area

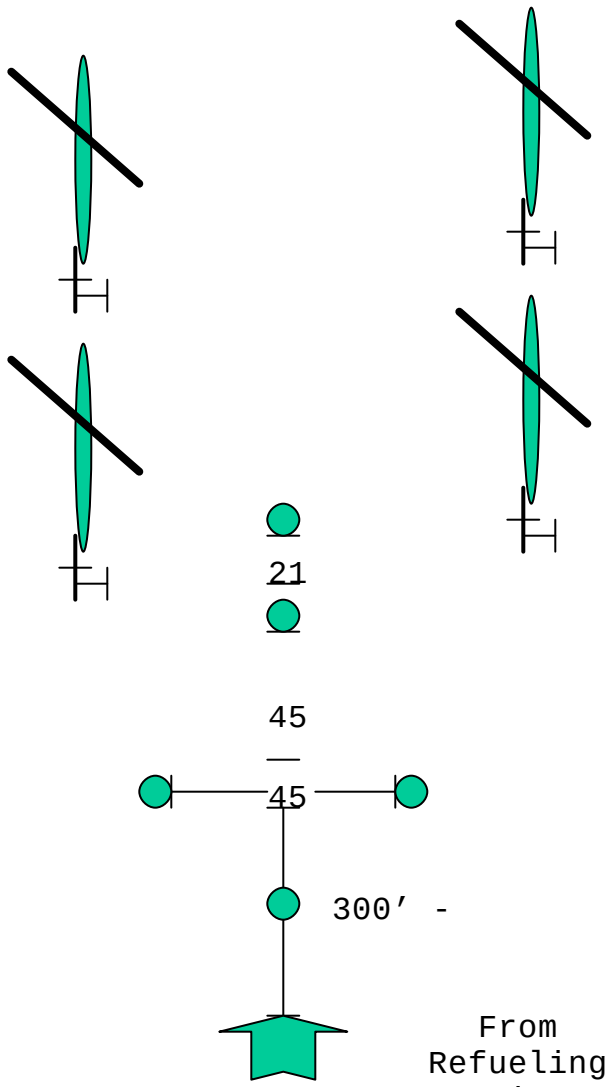

REFERENCE(S):

1. FM 5-330 VOL I - The Design of Roads, Airfields, and Heliports in the Theater of operations

UNITED STATES MARINE CORPS
COMBAT ENGINEER INSTRUCTION COMPANY
MARINE CORPS ENGINEER SCHOOL
PSC BOX 20069
CAMP LEJEUNE, NORTH CAROLINA 28542-0069

C-23C01
6 Mar 01
(95 POI)

STUDENT HANDOUT

CONSTRUCTION PRINTS

LEARNING OBJECTIVES:

a. **Terminal Learning Objective**: Provided a mission, a construction site, construction drawings, blueprints, specifications, or site surveys as required, estimate the resources (personnel, materials, and equipment) required to safely complete the project in accordance with FM 5-35 and FM 5-551. (1371.1.5)

b. **Enabling Learning Objectives**:

(1) Provided construction prints for a wood frame structure, with the aid of references, determine the materials to construct the structure in accordance with FM 5-551. (1371.1.5a)

(2) Provided construction prints for a wood frame structure, with the aid of references, identify the specifications in accordance with TM 5-704. (1371.1.5b)

OUTLINE

1. CONSTRUCTION PRINTS: Construction prints or as they are sometimes called "blueprints", is a set of drawings. These drawings are called working drawings. With construction prints you can identify the shape, description, and the material types and sizes of an object. This enables you to visualize the object that is on the print. All manufactured items have prints to show how they are made, how the parts fit together, and how the finished product should appear. Prints or working drawings are very useful in assisting in such areas as: planning, scheduling, estimating, and developing a CPM for a project. They assist in such areas as determining if a modification is needed and knowing what components are used in the assembly or structure after the project is completed.

a. Types of Views Used in Architecture Drawings

(1) Perspective Views are drawings of an object as it would actually appear to an observer. Perspective views have vanishing points, which are imaginary points off the drawing that are used to create a 3 dimensional view. Most common types are the two-point perspectives.

(2) Isometric Views are picture-like views, in which vertical lines or angles remain vertical. The horizontal lines are drawn at a 30 degree angle. All lines are scale measurements and do not have vanishing points. Due to the vertical lines being the reference point isometric drawings are distorted views.

(3) Plan views display the interior arrangement of a structure as it would appear from above. Plan views make imaginary section cut approximately 4 feet above the finish floor, removing the roof to show outside shape of the structure. Most common types are floor, foundation, electrical, plumbing.

(4) Elevation Views shows an object, as it would look if you were standing directly in front of it.

(5) Sections and Details drawings are cut-away drawings that show assemble of the structure. Builders use section and detail drawings to plan the construction procedures. Most common are wall sections, roof section, fascia details, door and window details and foundation details.

b. Convention Lines. All necessary information on a drawing in a meaningful manner, different types and weights of lines is used to represent the features of the object.

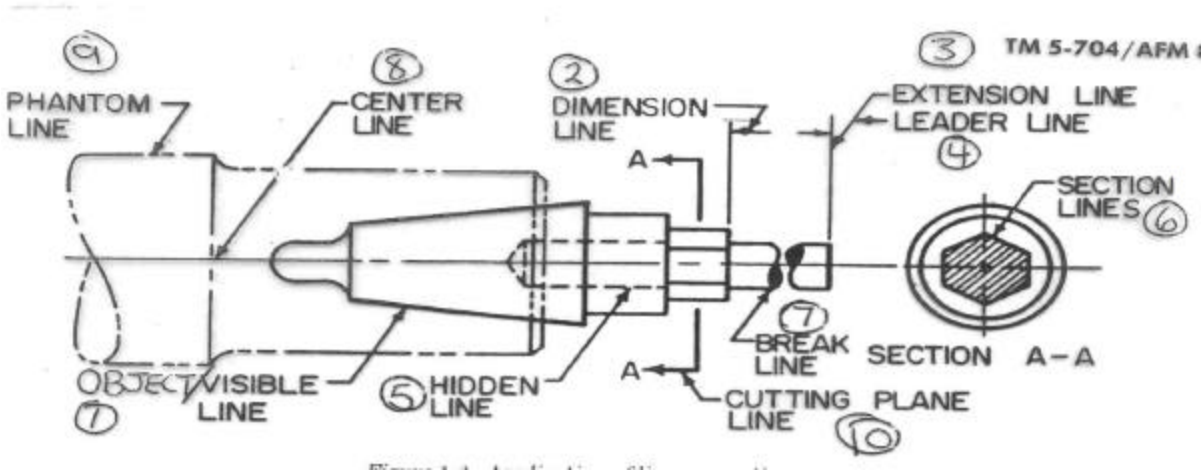

(1) Object lines are thick lines that show the boundaries of the object (i.e. floor plan walls, machine parts).

(2) Dimension lines terminate with arrowheads or tick marks at both ends. They may be broken or unbroken depending on what type of dimension symbol is used. Unidirectional dimension systems will have broken dimensions lines, which is used for machine drawings. Architectural dimension systems will have unbroken dim lines used for architectural (building) drawings.

(3) Extension lines are used to show the extent of the dimension or measurement.

(4) Leader lines will be used to indicate the part or feature to which a number, note or other information refers.

(5) Hidden lines are dotted lines that show hidden features of an object.

(6) Section lines show where the imaginary cut is made for the cross-section view of an object.

(7) Break lines are thin lines interrupted by a Z-shaped symbol. They indicate that the object may have been shortened to save space on the drawing. The true length is shown on the dimension line.

(8) Centerlines are composed of long and short dashes. They are used to indicate the center of: holes, curves, arcs, finished floor, finished ceiling, and are used to indicate the centerlines of roads.

(9) Phantom lines are medium series of one long dash and two short dashes evenly spaced ending with a long dash. They are used to indicate the alternate position of parts or repeated detail.

VISIBLE LINES	HEAVY, UNBROKEN LINES. USED TO INDICATE VISIBLE EDGES OF AN OBJECT.	
HIDDEN LINES	MEDIUM LINES WITH SHORT, EVENLY SPACED DASHES. USED TO INDICATE CONCEALED EDGES.	
CENTER LINES	THIN LINES MADE UP OF LONG AND SHORT DASHES ALTERNATELY SPACED AND CONSISTENT IN LENGTH. USED TO INDICATE SYMMETRY ABOUT AN AXIS AND LOCATION OF CENTERS.	
DIMENSION LINES	THIN LINES TERMINATED WITH ARROWHEADS AT EACH END. USED TO INDICATE DISTANCE MEASURED.	
EXTENSION LINES	THIN, UNBROKEN LINE. USED TO INDICATE EXTENT OF DIMENSIONS.	
LEADER	THIN LINE TERMINATED WITH ARROWHEAD OR DOT AT ONE END. USED TO INDICATE A PART, DIMENSION, OR OTHER REFERENCE.	

NAME	CONVENTION	DESCRIPTION AND APPLICATION	EXAMPLE
PHANTOM OR DATUM LINE		MEDIUM SERIES OF ONE LONG DASH AND TWO SHORT DASHES EVENLY SPACED ENDING WITH LONG DASH. USED TO INDICATE: ALTERNATE POSITION OF PARTS, REPEATED DETAIL, OR A DATUM PLANE.	
STITCH LINE		MEDIUM LINE OF SHORT DASHES. EVENLY SPACED AND LABELED. USED TO INDICATE STITCHING OR SEWING.	
BREAK (LONG)		THIN, SOLID RULED LINE WITH FREE-HAND ZIGZAGS. USED TO REDUCE SIZE OF DRAWING REQUIRED TO DELINEATE OBJECT AND REDUCE DETAIL.	
BREAK (SHORT)		THICK, SOLID FREE-HAND LINES. USED TO INDICATE A SHORT BREAK.	
CUTTING OR VIEWING PLANE—VIEWING PLANE OPTIONAL		THICK, SHORT DASHES. USED TO SHOW OFFSET WITH ARROWHEADS TO SHOW DIRECTION IN WHICH SECTION OR PLANE IS VIEWED OR TAKEN.	
CUTTING PLANE FOR COMPLEX OR OFFSET VIEWS		THICK, SHORT DASHES. USED TO SHOW OFFSET WITH ARROWHEADS TO SHOW DIRECTION VIEWED.	

2. WORKING DRAWINGS: Working drawings are the architectural plans for the construction of temporary facilities. They enable the viewer to create what the engineer of the drawings has envisioned. The drawings come in sets, which include all the plans that are required to pass the information along.

a. The perspective drawing is an artist's conception of the finished building (but not always included); this allows the customer to see the finished product.

b. The index sheet contains an index of all of the drawings in the set. It also contains a list of symbols as contained in TM 5-704.

c. The site plan or plot plan which may contain proximity drawing which enables the user to locate the working area. The site plan specifies details where the structure is to be located. Included in the site plan are:

(1) Boundaries.

(2) Contours.

(3) Roads.

(4) Utility Lines.

(5) Structure Location.

(6) North Arrow (for orientation).

(7) Legend to identify marks and symbols used.

d. The foundation plans are used to show the substructure of the building. Other pertinent information derived from the foundation plan includes:

(1) Shows footings, perimeter walls, piers, pilasters or girders.

(2) Framing information.

(3) Shows what the finished grade is required to be.

(4) Notes about the project, which must be read and understood.

e. The floor plan is the first drawing made of the structure and shows:

(1) The shape of the building.

(2) Size and shapes of rooms.

(3) Location of doors and windows (also enclosed on door and window schedule.

(4) Stairs.

(5) References to other drawings.

(6) Used to draw the electrical plan, foundation plan, plumbing plan, and HVAC plan and elevation drawings.

f. Elevation drawings are used to show final height and finish materials. Included on this drawing:

(1) Rough-opening height of windows and doors.

(2) Roof overhangs distance.

(3) Type of exterior materials (siding, roofing, etc.).

g. The electrical plan is used to build the material takeoff for electrical components, and the location of all the electrical components. Included on this drawing:

(1) Service entrance.

(2) Power Panel.

(3) Convenience outlets (receptacles).

(4) Switches.

(5) Type of wiring (to include sizes).

(6) Circuits to lighting panel (numbered).

(7) Location of installed lighting.

h. The plumbing plan is also used to develop the material takeoff for the plumbing materials, and the location of all plumbing components. Included on this drawing:

(1) Complicated systems will be detailed with isometric drawings.

(2) Waste system.

(3) Water supply - hot and cold.

(4) Symbols (plumbing fixtures such as water closets, sinks, etc.).

(5) Venting system.

i. HVAC (Heating, Venting, and Air Conditioning) plan is also used to develop the material takeoff for the HVAC materials, and the location/type of all HVAC components. Included on this drawing:

(1) Heater location and type.

(2) Air condition location and type.

(3) Ducts location and sizes.

(4) Any special features to move air (turbo fans, ceiling fans, etc.).

3. SECTION AND DETAIL DRAWINGS: May have one or more section/details on one sheet. The types of section/details that may be encountered include:

a. Typical wall section - next to the floor plan the wall section is probably the most important drawing in the set of prints. It explains everything about how the wall is to be constructed. In construction, a wall is the exterior portion of the framing. A partition is the divider between rooms.

b. Stair detail - includes the placement as well as the stringers, risers and treads.

c. Sill detail - includes the type of material to be used, size, and whether it will be used for a regular door or a sliding door.

d. Wall framing detail and roof framing for unusual situations.

e. Any feature that may be unique or that engineer deems appropriate.

4. MARKING UP OF WORKING DRAWINGS: After the building is complete the working drawings must be turn in to the S-3 section. These working drawings should be marked up to show any changes or improvements.

a. YELLOW is used for showing the building as built. This is also a method to check your work.

b. BLUE is used to show minor changes on your working drawings (i.e. dimension incorrect).

c. RED is used to show major changes on your working drawings (wall placement, design change).

REFERENCES:

1. FM 5-35, Engineer Reference and Logistical Data

2. FM 5-551, Carpentry

3. TM 5-704, Construction Print Reading in the Field

UNITED STATES MARINE CORPS
MARINE CORPS ENGINEER SCHOOL
COMBAT ENGINEER INSTRUCTION COMPANY
PSC BOX 20069
CAMP LEJEUNE, NORTH CAROLINA 28542-0069

C-23C03
5 June 00
(95 POI)

STUDENT HANDOUT

BUILDING LAYOUT

LEARNING OBJECTIVES:

a. Terminal Learning Objective: Provided a construction site, construction drawings and specifications, tools, building materials, and reference, as a member of a team, lay out a wood frame structure in accordance with FM 5-551. (1371.1.4)

b. Enabling Learning Objective(s):

1. Given construction prints for a wood frame structure, with the aid of reference, determine the requirements to construct a batter board in accordance with FM 5-551. (1371.1.4a)

2. Given construction tools and material with the aid of references, lay out square corners for a batter board in accordance with FM 5-551. (1371.1.4b)

OUTLINE

1. BUILDING ALIGNMENT

a. Building alignment is the correct placement of the building on the site. To ensure that the building will look square in relation to the other buildings or structures, several methods may be used.

b. Use an existing structure as a reference point to start measuring from.

(1) To keep alignment, hold a string line from the far corner of an existing building and run the string along the foundation, making sure the string line just touches the existing structure, to the site of the new structure.

(2) Measure distance between buildings from the near corner out to where the building will be located. As a rule of thumb you should not go any further than 90 feet.

c. Use the center line of a highway because it is usually the straightest part of the road. This will also ensure that the building will not look out of position or be misaligned.

d. Use monuments as a reference.

(1) Natural: Boulders, streams, trees, etc.

(2) Man-made.

(a) Pipe or stake driven into ground.

(b) Bench markers - predetermined areas on the earth (a point of reference from which measurements may be taken).

2. CORNER STAKES

a. Purpose

(1) The finishing nail, located in the center of the corner stakes, designates where the final corners of the building will be located.

(2) It gives the exact measurement of the building's perimeter.

b. Methods of determining a right angle

(1) Purpose: To place the stakes squarely or line the stakes up with each other.

(2) Use of carpenters square

(a) Least preferred method because it is not very accurate for buildings over 8'x 8'.

(b) Place the square at one corner where two strings come together and square the strings by moving the ends in or out. This process has to be done at all four corners. Remember not to move the corner already squared.

(3) 3-4-5/6-8-10 method.

(a) This method is much more accurate, but you must start with two strings anchored at 90 degrees to each other.

(b) Place a thick mark 4' out on one line and 3' out on the other line and measure 5' between.

(4) The two steel tape measuring method.

(a) Most accurate method, but requires at least three people.

(b) Must use a diagonal distance for this method. Get this distance with the use of the Pythagorean Theorem.

$$C^2 = A^2 + B^2$$

(c) Our example is a building 16 x 32.

Step #1:
$$\begin{array}{r} (16 \times 16 = \ \ 256) \\ \underline{+\ (32 \times 32 = 1024)} \\ 1280 \end{array}$$

Step #2: $1280^2 = 35.77'$

Step #3: 35.77' = 35' 9-1/4"

c. Placing the corner stakes using the two steel tape method.

(1) First stake

(a) Get the building alignment

(b) Measure distance from existing structure.

(c) Drive 2 x 2 stake under string.

(d) Remeasure and put a finish nail at the exact point of measurement and under the string.

(2) Second Stake

(a) Lay out width of building from the nail on the first stake and place a 2 x 2 stake under the string at the exact measurement.

(b) Remeasure and place a finishing nail at the exact width under the string. Remeasure from the nail to the stake for accurate placement of the nail.

(c) Check both the alignment and the measurement of first and second stakes.

(3) Third Stake

(a) Using the two steel tape method, place the first steel tape on the first corner stake and measure out the length of the building to approximate point of where the third stake will go.

(b) Place the second tape on the second stake and run it diagonally to where the third stake should be.

(c) Make the two tapes intersect at the length measurement and its diagonal measurements (35' 9 1/4").

(d) At the intersection place the third stake. Move the tape and drive the stake in.

(e) Remeasure and place a finish nail at that intersection.

(4) Fourth Stake. Follow the same procedure that was used for the third stake.

(5) Check Corner Stakes

(a) Ensure a 90 degree angle is obtained.

(b) Check diagonal distances and make sure they are equal and correct.

(c) If there are any corrections to be made, the first and second stakes will not be moved. These stakes are also called alignment stakes. Adjust the layout by moving the third and fourth stakes.

3. BATTER BOARDS

a. Purpose

(1) Supports the building lines during early stages of construction.

(2) Batter boards are used as a reference point, should the building lines be needed once construction has started.

b. Requirements for Batter Board Stakes

(1) Should be cut from 2 x 4 material at least five feet long.

(2) Need at least three per corner.

(3) Stakes should be pointed on one end for easy driving and should be driven in at least one foot.

c. Requirements for Batter Boards

(1) Should be at least five feet long and made from 1 x 4 or 1 x 6 material. Need two per corner.

(2) Placed at least three feet from the corner stakes to give enough working room when digging footings.

(3) Placed at 90 degrees or as close as possible for appearance.

d. Method of Installation

(1) First install the batter board stakes to hold the batter boards.

(2) With the stakes in place, begin to set up the batter board starting at the highest point if ground is not level.

(3) The height of the batter boards will usually represent the height of the finished floor.

(4) Measure up on the corner batter board stake to the desired height of the finished floor.

(5) Place batter boards on stakes and level them.

(6) Once leveled, run a string line to the next set of stakes and use a line level to get the next set of batter boards level with the first set.

(7) Repeat until all batter boards are installed.

e. Check Installations

(1) Run line with line level to see if all sets of batter boards are level.

(2) Check each set of batter boards with carpenter's level.

4. BUILDING LINES

a. Purpose

(1) Shows the outline of the building.

(2) Provides a ready reference of the building's dimensions.

(3) Preserves the building's dimensions during early stage of construction.

b. Installation of Building Lines

(1) Run string from the head of the nail on stake #1 to the top of the batter board at corner #3.

(2) Set up the carpenter's level on stake #3 up against the finish nail and make the head plumb.

(3) Roll the string so that it easily touches the level and mark the batter boards.

(4) Once the board is marked, check it and make a saw cut on the top back side of the board. Cuts are made for easy removal and replacement of building lines.

(5) Place a nail below the cut.

(6) Repeat the process until all batter boards are marked and cut.

(7) After all boards are marked and cut, install the strings.

c. Final Check

(1) Check diagonal distance to see if they are correct and equal.

(2) Insure strings cross over each other lightly and that they intersect directly over the finishing nails.

REFERENCES:

1. FM 5-35

2. FM 5-551

3. FM 5-704

UNITED STATES MARINE CORPS
COMBAT ENGINEER INSTRUCTION COMPANY
MARINE CORPS ENGINEER SCHOOL
PSC BOX 20069
CAMP LEJEUNE, NORTH CAROLINA 28542-0069

C23C05
06 Mar 01
(98 POI)

STUDENT HANDOUT

WOOD FRAME STRUCTURE DESIGN

LEARNING OBJECTIVES:

a. **Terminal Learning Objective**: Provided a mission, construction drawings, blueprints, or specifications, writing/sketching materials, a calculator, and the reference, design wood frame structure to conform to the construction drawings, blueprints, or specifications, identify types of materials and proper spacing and support all loads considered per the reference. (1371.01.03)

b. **Enabling Learning Objectives**:

1. Given building specifications, writing and sketching materials, a calculator, and FM 5-551, design a foundation per the reference. (1371.1.3a)

2. Given building specifications, writing and sketching materials, a calculator, and FM 5-551, design a floor per the reference. (1371.1.3b)

3. Given building specifications, writing and sketching materials, a calculator, and FM 5-551, design stairs per the reference. (1371.1.3c)

4. Given building specifications, writing and sketching materials, a calculator, and FM 5-551, design a wall frame per the reference. (1371.1.3d)

5. Given building specifications, writing and sketching materials, a calculator, and FM 5-551, design a roof frame per the reference. (1371.1.3e)

6. Given construction drawings, blueprints or specifications for a wood frame structure, estimate the materials required to construct the structure per the reference. (1371.1.3f)

BODY

1. **WOOD FRAME CONSTRUCTION**

a. Framing is the rough timberwork of a building.

b. Types of Wood Frame Construction

(1) Heavy Wood Framing

(a) Heavy wood framing consists of framing members at least six inches in dimension (timber construction).

(b) This type of construction is used in structures such as bunkers and nonstandard bridges.

(2) Light Wood framing

(a) Light framing is used in barracks, administration buildings, light shop buildings, hospital buildings, and similar structures.

(b) Light wood framing consist of framing members of common lumber as in 2 x 4's, 1 x 2's, plywood, etc.

c. The major differences between heavy and light framing are the size of the timber used and the type of fastener used.

2. **LUMBER**

a. Size.

(1) Lumber is usually sawed into standard size, length, width, and thickness. Standards have been established for dimension differences between quoted size of lumber and its standard sizes when dressed. Quoted sizes refer to the dimensions prior to surfacing.

(a) These dimension differences must be taken into consideration. A good example of the dimension difference is the common 2 x 4 untreated. The familiar quoted size 2 x 4 is the rough or nominal dimension but the actual dressed size is 1 1/2 by 3 1/2 inches.

(b) The treated lumber may vary due to swelling or shrinkage during the pressure treating process.

(2) Plywood is usually in a standard size of 4’ x 8’ and thickness varies; 1/2", 5/8", and 3/4".

b. Grade. Lumber is subdivided into classifications of select lumber and common lumber. Common lumber is suitable for general construction and utility purposes.

(1) Common lumber is graded from No 1 to No 5 common (No 1 being of the best grade). No 2 common is the most commonly used for framing construction.

(2) Plywood is graded a little different with the best being AA and the worst being CD. CD is the most commonly grade used for exterior sheathing.

3. **FASTENERS**

a. Nails

(1) Common nails. The Common Wire nail is used in housing construction framing.

(2) Finishing nails. The finishing nail is made of finer wire and has a smaller head than the common nail. It may be set below the surface of the wood and leaves only a small hole easily filled with putty. It is generally used for interior and exterior finishing work and for finished carpentry and cabinet-making.

(3) Scaffold or form nails. These nails appear to have two heads. The lower head (shoulder) permits the nail to be driven securely home while the upper head projects above the wood to make it easy to pull. This nail is not meant to be permanent.

(4) Roofing nails. Roofing nails are round-shafted, diamond-pointed, and galvanized. They are of relatively short length and large head. They fasten flexible roofing and resist continuous exposure to weather.

(5) Cut nails. Cut nails are wedge-shaped with a head on the large end. They are often used to nail flooring because they are of a very hard steel and have good holding power.

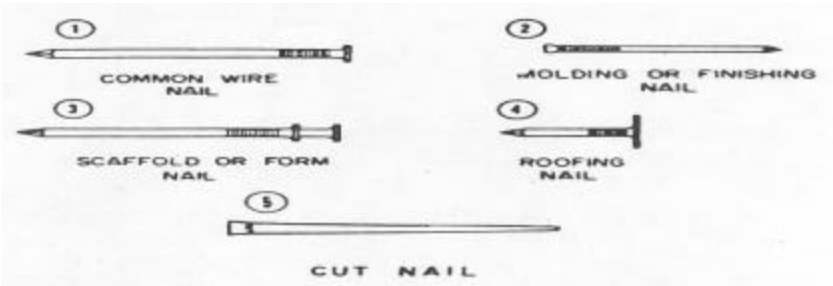

Figure 3–6. Types of nails.

(6) Nail size. Nail sizes are designated by the term "penny." This term applies to the length of the nail. The "d" next to the number is the abbreviation for "penny". The approximate number of nails per pound varies according to the type and size. Common nails range from 2d, which are 1 inch long and contain approximately 900 nails per pound, to 60d, which are 6 inches long and contain approximately 11 per pound. The nail used should be at least three times as long as the thickness of the wood it is intended to hold. Two-thirds of the length of the nail is driven into the second piece for proper anchorage; one-third-anchors of the lenght the piece being fastened.

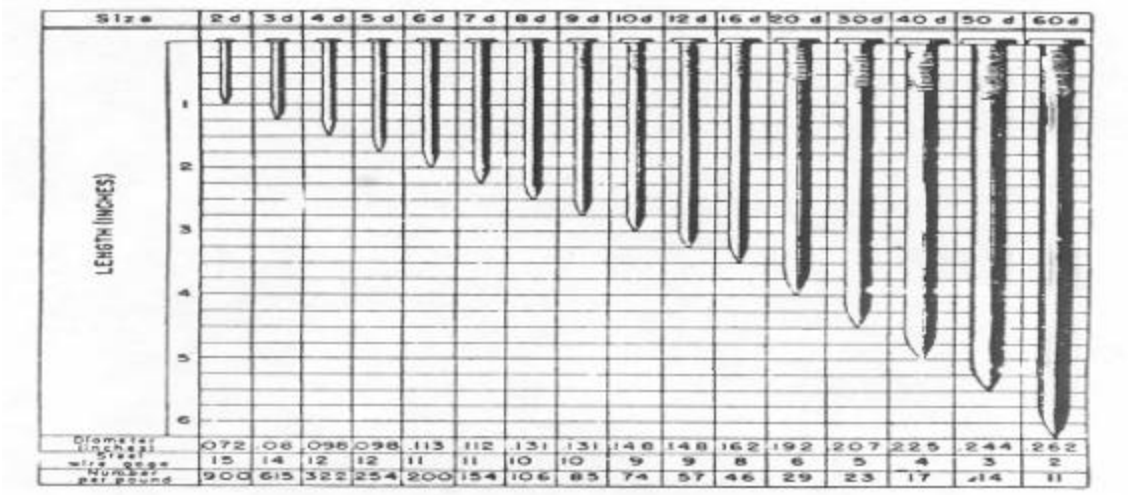

b. Screws. Screws are more expensive in time and money than nails, but sometimes are necessary for superior results. They provide more holding power than nails, can be easily tightened to draw the material securely together, are neater in appearance, and may be withdrawn without damaging the material.

(1) Wood screws. Wood screws are designated according to their head style. The most common type are flathead, oval head, and roundhead with either slotted; ⊖ or Phillips heads; ⊕.

(2) Lag screws. They are longer and heavier than the common wood screw and have coarser threads, which extend from a cone or gimlet point slightly more than half the length of the screw. Square-head and hexagon-head lag screws are usually placed with a wrench.

c. Bolts. Bolts (sometimes referred to as lag bolts) are used when great strength is required or when the work must be frequently disassembled.

d. Expansion shields. Expansion shields are inserted in pre-drilled holes, usually masonry, to provide a gripping base or anchor for a screw, lag bolt, or nail.

e. Drift pins. Drift pins (called drift bolts for supply purposes) are long, heavy, thread-less bolts used to hold heavy pieces of lumber/timber together.

f. Corrugated fasteners. Corrugated fasteners are used to fasten joints and splices in small timber and boards.

4. **JOINTS AND SPLICES:**

a. Joints. Joints are connections between two pieces of timber, which come together at various angles.

(1) Straight butt joint. Form the straight butt joint by bringing the square-cut end of one board against the square face of another. The butt end of one board should be square and the face of the other smooth so that the pieces fit perpendicular to each other. This is the most common joint used in wood frame construction.

(2) Oblique butt joint. Form the oblique butt joint by bringing the end of one board, cut to form the desired angle, against the face of another board with which it is to be joined. Bracing is a typical application for this joint. Do not use this joint where great strength is required.

(3) Miter butt joint. Form the miter butt joint by bringing the mitered ends of two boards together to form a desired angle. To form a right-angle miter joint (the most commonly used miter joint), cut each piece at a 45 degree angle so that when the pieces are joined they form a 90 degree angle. The miter joint is a very weak joint and is not to be used where strength is important.

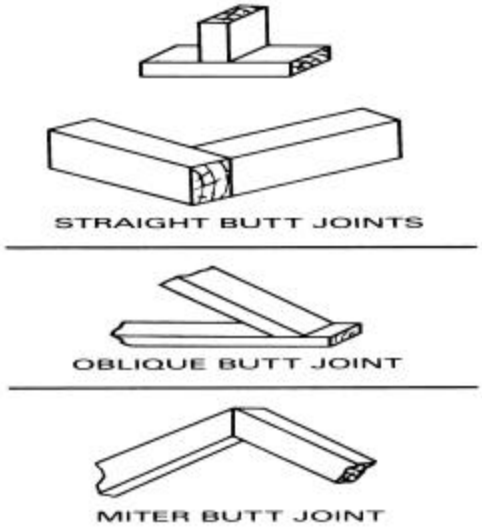

(4) Plain lap joint. Form the plain lap joint by laying one board over another and securing the two by means of screws or nails. This joint is as strong as the fasteners and material used.

(5) Half-lap joint. Construct this splice by cutting away portions (usually half) in equal lengths from the thickness of two boards and joining them in such a way that the cutaway portions overlap to form the joint. Overlapping surfaces must fit snugly and smoothly.

b. Splices. Splices connect two or more pieces of timber together so they will be as strong as a single timber of the same length and the joint will be as strong as the disconnected portions **same size lumber is used to make the splice.**

(1) Butt splice. Construct the butt splice by butting the squared ends of two pieces of timber together and securing them in this position by means of two wood pieces (scabbing) fastened on opposite sides of the timber. When

nails are used with scabs, stagger them and drive them in at an angle away from the splice. Too many nails, or nails that are too large, will weaken the splice.

(2) Halved splice. Construct the halved splice by cutting away half the thickness of equal lengths from the ends of two pieces of timber and fitting the complementary tongues or laps together. The laps should be long enough to have sufficient load bearing surface.

5. **STRONGBACK AND SEA HUT**

a. The strongback is a wooden structure that is used as a frame or shell for a 16' x 32' General-Purpose (GP) tent.

b. When a 16' x 32' wood frame is modified by a metal roof, extended rafters, and screened in area, it is called a SEA hut.

c. The SEA hut is usually a standard prefabricated unit, but the design can be easily changed to fit the existing condition, such as lengthening the floor and making the roof higher.

6. **BILL OF MATERIALS (BOM):**

a. Bill of materials is used to order all of the materials to construct a project. It must include NSN, nomenclature, size, quantity, unit of issue (BF, SHT, EA, etc), price and remarks section.

b. Each unit will have a set format on how the bill of material must be done.

c. BOM sample

BILL OF MATERIALS

ITEM	NSN	NOMENCL	QTY/BF	UNIT	TOTAL PRICE
1	5511001C000604	2x4x10’0"	134/893.33	.34	$303.73
2	552001C000599	2x4x8’0"	184/981.33	.33	323.25
3	551001C000626	2x8x12’0"	96/1536.00	.42	645.00
4	551101C000609	2x8x14’0"	9/168.00	.30	70.00
5	553001C000645	3/4" Plywd	35 sh	14.50	507.50
6	553001C000644	1/2" Plywd	81 sh	9.5	769.50
7	565000C900068	Shingles	14 sq	6.99	97.86
8	5315001985624	Roof Nail	14 Lbs	.95	38.95
9	5315007533885	Nail 16D	124 Lbs	.68	84.32
10					

7. **MATERIAL TAKEOFF SHEET**:

a. Material takeoff sheet is used to list all materials needed to build the building. It must include nomenclature, size, quantity (Qty), unit of issue [Board Feet (BF), sheet (sht), pieces (pcs), etc.] and remarks section.

b. Total board footage is acquired up to the second number after the decimal point without rounding up.

c. Sample Material Takeoff Sheet.

MATERIAL TAKEOFF SHEET

ITEM	# OF PCS.	SIZE LUMBER	TOTAL BDFT.	REMARK
SILL	**16**	**2″ x 8″ x 10′**	**213.33**	
GIRDER	**22**	**2″ x 12″ x 10′**	**440**	
JOIST	**95**	**2″ x 8″ x 12′**	**1,520**	**8 trimmer joist**
HEADER	**11**	**2″ x 8″ x 10′**	**168**	
BRIDGING	**10**	**2″ x 8″ x 16′**	**213.33**	**16′ = 13 pcs of 14.5″ long solid bridging**
STRINGER	**5**	**2″ x 10″ x 12′**	**100**	**2 stringers/stairs**
TREAD BOARD	**19**	**2″ x 4″ 12′**	**152**	**12′ = 3 pcs of 3′ long treads**
PLATES	**60**	**2″ x 4″ x 14′**	**400**	
STUDS	**184**	**2″ x 4″ x 8′**	**981.33**	**LONG METHOD**
UPPER CHORD	**62**	**2″ x 4″ x 12′**	**496**	**Lgt: 11′ 7-13/16″**
LOWER CHORD	**58**	**2″ x 4″ x 10′**	**386.66**	**Lgt: 10′**
CENTER POST	**7**	**2″ x 4″ x 16′**	**74.66**	**16′=5 pcs of 37″ long ctr.post**
SUBFLOOR	**38 shts.**	**3/4″ x 4′ x 8′**	**Plywood**	
EXTERIOR WALL	**42 shts.**	**3/4″ x 4′ x 8′**	**Plywood**	
GABLE	**6 shts.**	**3/4″ x 4′ x 8′**	**Plywood**	
ROOF	**49 shts.**	**1/2″ x 4′ x 8′**	**Plywood**	**Roof = 1296 sqft**
INTERIOR WALL	**104 shts.**	**1/2″ x 4′ x 8′**	**Sheet rock**	
SHT. ROCK NAIL	**31 Lbs.**			
FELT PAPER	**5 rolls**	**400 sqft/roll**		
SHINGLES	**45 bundles**	**4 bundles/square**		
ROOFING NAILS	**29 Lbs.**			**Roof = 1296 sqft**
8d NAILS	**96 Lbs.**			
16d NAILS	**135 Lbs.**			

8. **LUMBER CONSOLIDATION SHEET:**

a. Lumber consolidation sheet is used to consolidate lumber items of the same size from the Material Takeoff Sheet. It must include nomenclature, size, quantity, unit of issue (bf, sht, ea, etc) and remarks section.

b. Sample of lumber consolidation sheet.

Lumber Consolidation Sheet

ITEM	QTY	UNIT SIZE	LENGTH	BF	REMARKS

9. **BASIC MATH REVIEW**:

a. Converting a measurement from feet into inches or inches into feet.

(1) There are 12 inches in one foot.

(2) Convert feet to inches, multiply the measurement by 12.

(3) Convert inches to feet, divide the measurement by 12.

(4) Converting factions to become decimal, divide the numerator (top number) by the denominator (bottom number).

b. Some of the common conversion factors that may be encountered when calculating for materials are listed below.

FRACTIONS TO DECIMALS	INCHES TO FEET
1/16" = .0625"	1" = .083’
1/8" = .125"	2" = .166’
3/16" = .1875"	3" = .250’
1/4" = .250"	4" = .333’
5/16" = .3125"	5" = .416’
3/8" = .375"	6" = .500’
7/16" = .4375"	7" = .583’
1/2" = .500"	8" = .666’
9/16" = .5625"	9" = .750’
5/8" = .625"	10" = .833’
11/16" = .6875"	11" = .916’
3/4" = .750"	12" = 1.00’
13/16" = .8125"	16" = 1.33’
7/8" = .875"	24" = 2.00’
15/16" = .9375"	

c. Subtraction: 12′ 4-3/8"
- 1′ 7"

__′ ____"

d. Pythagorean theorem: If the two sides of a right triangle are known, the third side can be found mathematically. The formula used is:
$A^2 + B^2 = C^2$ **NOTE**: To get the exact lengths do not round off the answers.

10. **ECONOMICAL ORDER LENGTH (EOL):**

a. Lumber comes in common lengths of 8, 10, 12, 14, 16, 18 and 20-foot pieces. Lengths of 18 and 20-foot pieces are special order.

b. Length of board that provides you with the most required pieces with the least amount of waste.

(1) EOL is approximately the same length as the building component. The formula is the **process of elimination**.

(a) Example: EOL on a floor joist for a building 13′ wide.

(b) Answer: EOL = 14′; because 8′, 10′ and 12′ pieces are too short, and the 14′ will cover the span with less waste than a 16′.

(2) **EOL needs to cover a total linear feet (TLF)**. The formula is to divide the linear feet to be covered by the EOL board length or
TLF ¸ EOL = # of EOL pieces (Round up to the whole number, if required).

(a) Ex: Length of lumber available is only a 16′, 14′ or 12′.

50′/16′ = _____ or ___pcs 50′/14′ = 3.**5**71 or ___pcs 50′/12′ = _____or ___pcs

(b) Determine which has least amount of waste.

16′ x 4 pcs = 64′
- 50′
14′ wasted

14′ x 4 pcs = 56′
- 50′
6′ wasted

12′ x 5 pcs = 60′
- 50′
10′wasted

(c) **GENERAL RULE: IF THE ANSWER IS NOT A WHOLE NUMBER**; then choose the answer with the **HIGHEST** number after the decimal point; of the lumber available above, 14′ has the least amount of waste.

(3) **EOL is long enough to acquire more than one building component** when cut (Round down to the whole number, if required).

(a) Example: A center post is 3′-9"; length of lumber available is only 16′, 14′ or 12′.

16′/3.75′ = _____or ____pcs 14′/3.75′= _____or _____pcs 12′/3.75′= _____ or ____pcs

OR

$\frac{192''}{45''}$ = 4.266 or 4 pcs $\frac{168''}{45''}$ = 3.733 or 3 pcs $\frac{144''}{45''}$ = 3.**20** or 3 pcs

(b) Determine which has least amount of waste.

$$3.75' \times 4 \text{ pcs} = 15' \begin{array}{r} 16' \\ -\ 15' \\ \hline 1' \end{array} \text{ wasted} \qquad 3.75' \times 3 = \begin{array}{r} 14.00' \\ 11.25' \\ \hline 2.75' \end{array} \text{ wasted}$$

$$3.75' \times 3 \text{ pcs} = \begin{array}{r} \mathbf{12.00'} \\ -11.25' \\ \hline \mathbf{.75' \text{ wasted}} \end{array}$$

(c) **GENERAL RULE: IF THE ANSWER IS NOT A WHOLE NUMBER**; then choose the answer with the **LOWEST** number after the decimal point; of the lumber available above, 12′ has the least amount of waste.

11. **FOUNDATIONS**:

a. Foundations vary according to their use, the bearing capacity of the soil, and the type of material available. The material may consist of cut stone, rock, brick, tile, wood, or concrete. The material used will depend on the type of foundation structure, the availability of materials, and the amount of weight it must support.

b. An inadequate foundation will result in uneven settling, and may cause cracked plaster, ill-fitting doors, or sticking windows.

c. May be classified as wall or column (pier) foundations.

(1) Wall foundations

(a) The continuous Tee foundation [Foundation Wall in diagram below paragraph (b)] is the most common type of concrete wall foundation used in construction today, it is made of concrete or cement blocks and are used in crawl spaces, basements, and bridge abutments, to name a few applications.

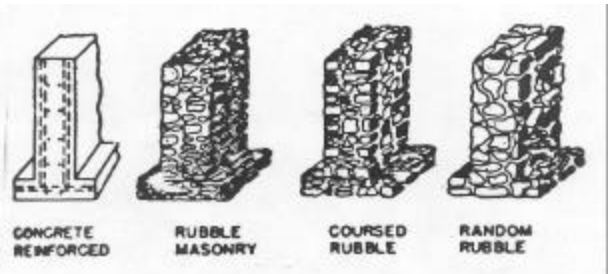

Figure 5–10. Foundation walls.

(b) The continuous Tee is a solid wall throughout its length, and it is designed to carry heavy loads where the earth has low supporting strength.

(c) Because of time, labor, and material required to build this type of wall, it will only be used when other types cannot be used.

(2) Column or post foundation

(a) Columns and piers are **CONSTRUCTED TEMPORARY IN NATURE AND USED 90% OF THE TIME AS THE FOUNDATION OF CHOICE FOR BASE CAMP CONSTRUCTION WHEN WOOD IS BEING USED.** The use of these foundations saves time, labor and, material.

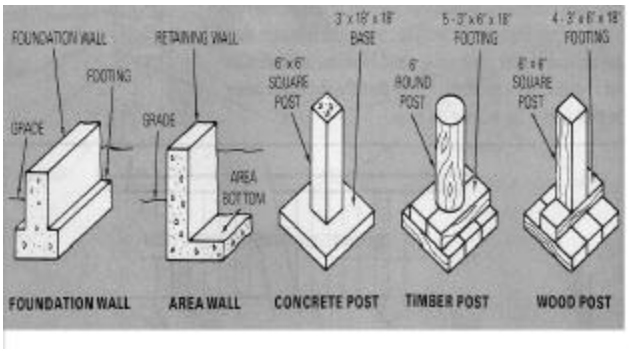

(b) Columns are spaced according to the amount of weight to be carried, generally from 6 to 10 feet apart. Structure that is higher than three feet above the ground must have cross bracing.

(c) Material for columns and piers are constructed of masonry or wood. Generally when wood is used, it is laminated.

1 Bearing plates should be used at the base and top to distribute the load evenly onto the column.

2 Columns should be securely anchored to the footers and the sills.

(d) Timber post buried at least three feet into the ground. Post must be at least 6" in diameter.

(3) Continuous mud sill **(Most common in the field)**

(a) This type of foundation is used frequently in the field for the construction of strongbacks (a wood frame structure used to support GP tents, which will be discussed later on in the outline). Consist of material, at least 2"x 6" wide, laid directly on the ground.

(b) 2" x 4" or larger may be used as a sleeper. Placed on edge on the center of the 2" x 6" running the length of structure.

12. **Floor Frames and Floor Coverings**:

a. Sills

(1) It supports all the building above it and provides a nailing surface for the remainder of the framing.

(2) It is the first part of the superstructure to be set in place. It is fastened to the foundation and rests directly upon it. The sill is continuous and joined at the corners, and is spliced when necessary.

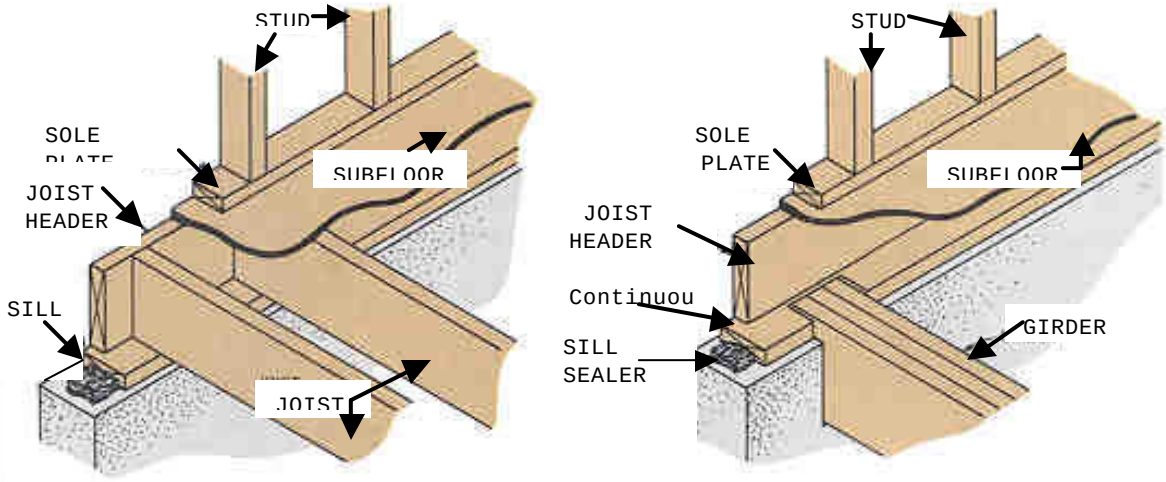

EXTERIOR WALL

EXTERIOR WALL AT GIRDER END

(3) Sills are designed for the type of foundation used.

(a) Continuous sills

1 Designed for wall foundations. It consists of 2" material laid flat around the entire length of the building.

2 Wall foundation is built with some type of device to anchor the sills.

(b) Solid sills

1 Designed for column and pier foundations. It consists of 6"x6" or larger timber to meet the required dimension.

2 Use timbers that are straight as possible and free of defects. If the timber has a crown, place the crown up.

3 Join all ends over a column or pier using a half lap.

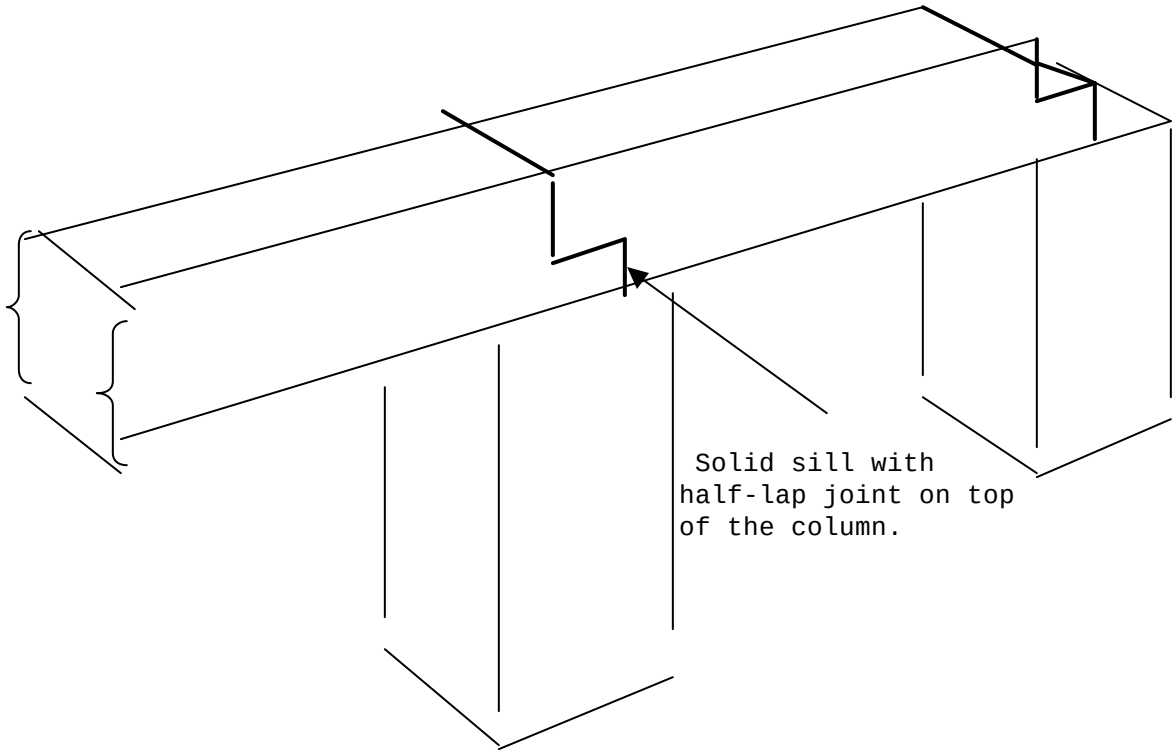

(c) Laminated sills

1 Designed for column and pier foundations. It consists of two or more pieces of lumber nailed together, with 16d or 20d nails, to meet the required dimension. The laminated material is laid on edge the length of the building.

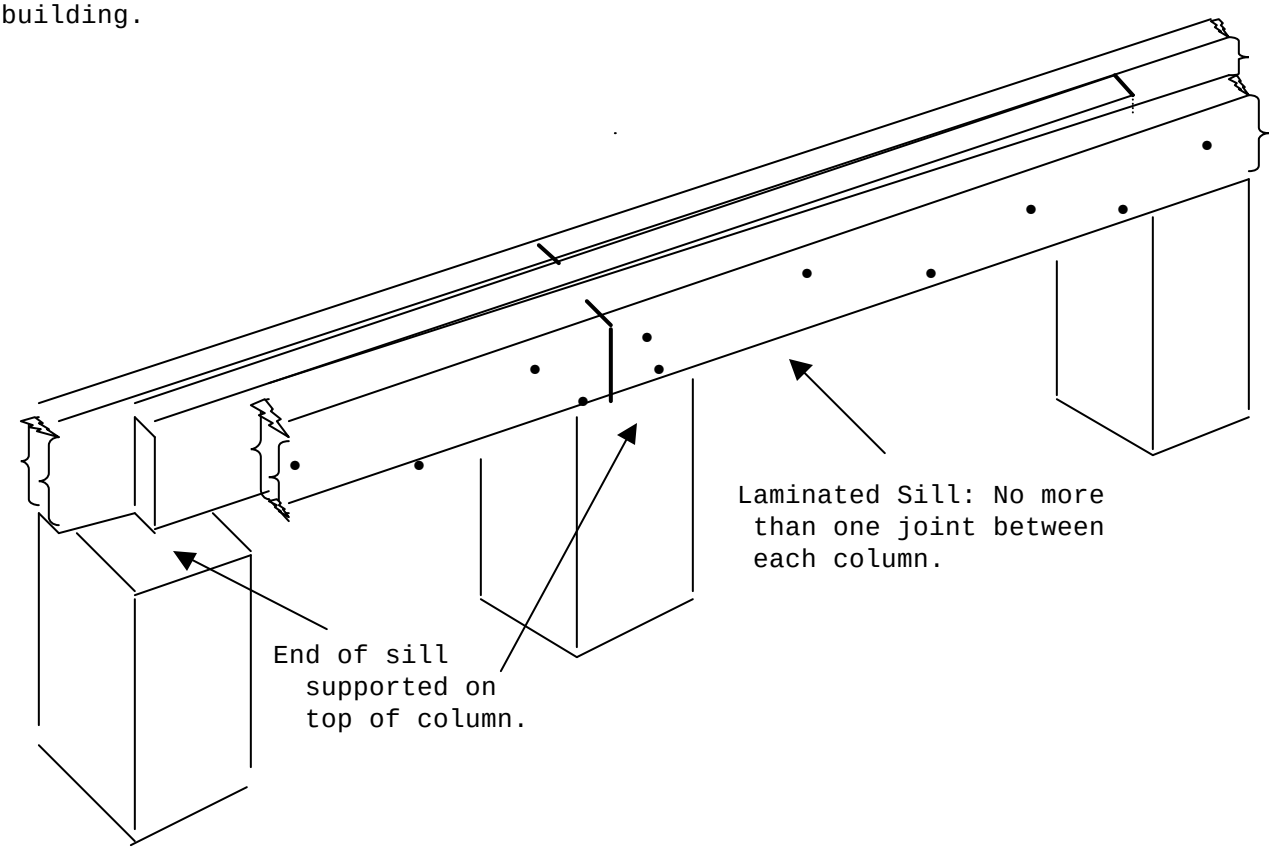

2 Joints are staggered over the columns or piers. Successive butt joints are used at the corners. No more than one joint should span between columns.

(d) Use a preservative between the sill and foundation (building paper, termite shields, etc.).

(e) Level the sills using wood wedges or grout.

(4) Estimation for sill materials.

(a) Continuous Sill:

1 Determine number of pieces required for a building; **20’-0" by 50’-0".**

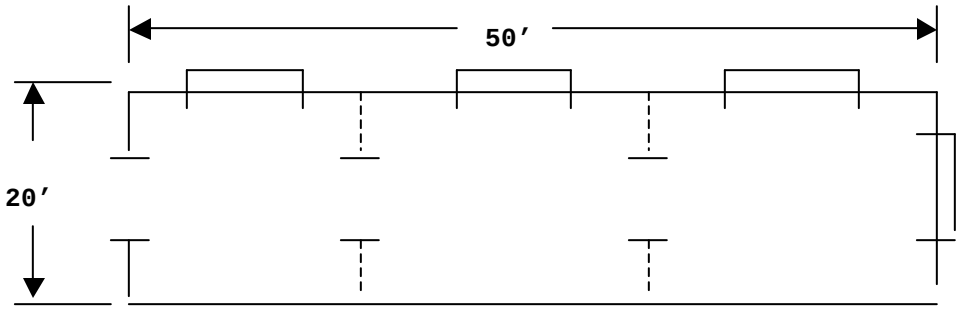

2 [(Length + width) x 2 sides] = Total Linear Feet (LnFt)

[(50’ + 20’) x 2] = _____ **or** 50’ + 50’ + 20’ + 20’=_____(LnFt)

3 Determine economical order length (EOL).

a (Total LnFt divided by best EOL) = # of pieces needed for continuous sill (Round up, if needed).

b $\frac{\text{Total LnFt}}{\text{EOL}}$ or $\frac{140'}{10'}$ = 14 pcs: 2" x 8" x 10’(Round up).

or $\frac{140'}{14'}$ = 10 pcs : 2" x 8" x 14’-0"

c Add 10% waste (always round up).

14 pcs x 1.1 = _____or _____pcs: 2" x 8" x 10’-0"

d Change to board feet (Quantity x Thickness x Width x Length) divided by 12 (12 is a constant number).

$\left(\frac{\text{16 pcs (Qty) x 2" (Tk) x 8"(Wth) x 10'(Lgt)}}{\text{12 (Constant \# to convert to BF)}}\right)$ = _____ BoardFeet(BF)

e Record on Takeoff sheet.

(b) Solid Sill:

1 (Length of building divided by pier spacing) times number of rows of piers equals the total number of pieces required for building.

2 A pier foundation will be used with the piers spaced 10’ apart.

$\frac{\text{Length of bldg.}}{\text{Pier spacing}}$ = _____ = _____pcs per sill (Round up, if needed).

There are 2 rows of piers (Two outside sills).

5 pieces per sill
x 2 rows
10 pcs total

3 Add 10% waste (always round up).

10 x 1.1 = _____ total pieces:

4 Determine the best EOL. It has been determined that a 6" x 6" solid sill is sufficient size material for this building.

EOL of 6" x 6" x _____’ is determined.

5 Change to board feet.

$\frac{11 \times 6'' \times 6'' \times 12'}{12}$ = _____BF; record on takeoff sheet.

(c) Laminated Sill:

1 Determine the best EOL for pier spacing at 10’. It has been determined that a 2" x 8" laminated sill is sufficient size material for this building.

50’ ÷ _____’ = 5 pcs (Round up, if needed)

2 Building length divided by best EOL equals total amount required for 1/3 the thickness of one sill.

5 pcs of 10’ EOL
x 3 lamination of sill
15 pcs per sill

3 Multiply the number of pieces required for one-sill times the number of sills to get total pieces required.

15 pcs per sill
x 2 sills (Two outside sills)
30 pcs total

4 Add 10% waste (always round up).

30 pcs x 1.1 = _____ pcs: 2" x 8" x 10’-0"

5 Change to board feet.

$$\frac{\_\_\_\_\_ \text{ pcs x } 2'' \text{ x } 8'' \text{ x } 10'}{12} = \_\_\_\_\_ \text{BF record on takeoff sheet}$$

b. Girder

(1) The foundation walls or columns carry the building load. The distance between the foundation walls or sills is often too great to carry the weight at the center of the building. An intermediate support girder or girders must carry this weight.

(2) A girder is a large beam that supports other small beams or joists. A girder may be made from several beams nailed together with 16d common nails; or may be solid wood, steel, reinforced concrete, or a combination of these materials.

(3) Columns and piers generally support girders. It is constructed that all beams run level when framed to the foundation walls and other girders.

(4) A girder with the depth doubled will increase the safe load four times. A girder 3" wide and 12" deep will carry four times the weight of a girder 3" wide and 6" deep.

(5) Size requirements are determined by the girder principles:

(a) The distance between the girder posts.

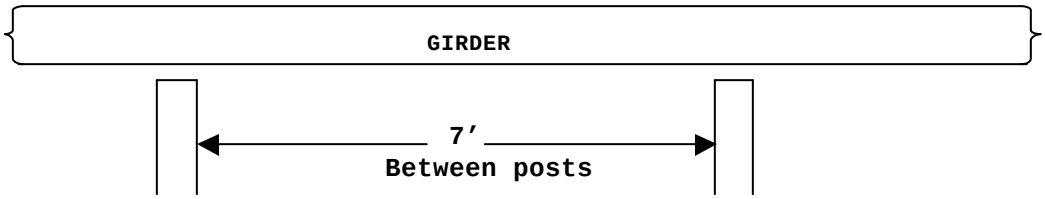

(b) The girder load area.

1 Since the building load is carried by the outside foundation walls and the girder; the girder supports twice as much load.

2 Determine the total length from midway points of the floor joist on both sides of the girder.

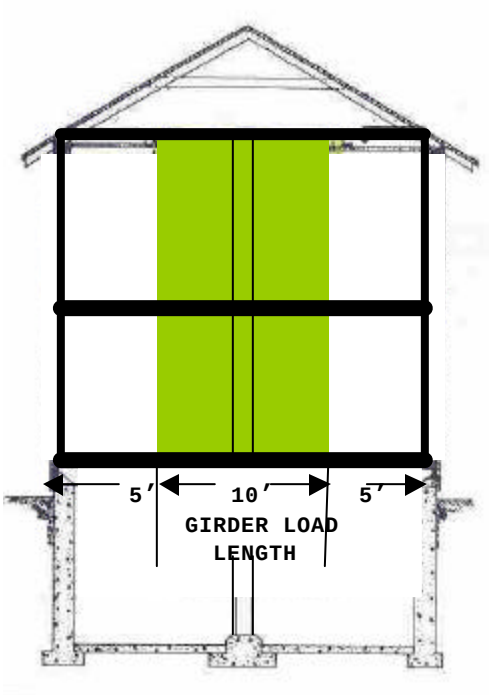

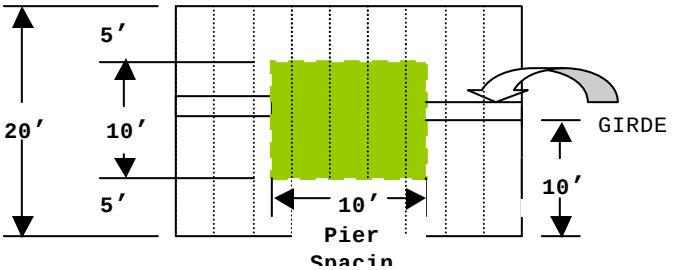

DEAD LOAD ALLOWANCE

1. Average subfloor, finish floor, and joists without basement plaster should be 10 Lbs/sqft. For each floor.

2. If the basement ceiling is plastered add an additional 10 Lbs/sqft.

3. If the attic is unfloored, an allowance of 20 Lbs must be added for ceiling plaster and joists when girders or bearing partitions support the first floor partition.

LIVE LOAD ALLOWANCE

1. If the floors are used for living purposes add 30 Lbs/sqft.

(c) The total floor load on the girder per square foot.

1 Add all the total dead and live load on the girder load area.

2 Multiply the total weight of the load times the length of the girder load width.

(d) The material to be used.

1 Laminated girders warp less easily than solid wooden girders and are less likely to decay in the center.

2 Using the chart in the FM5-426, page 6-11, determine the material used by cross referencing the distance between the girder post and the total floor load on the girder per square foot.

Sizes of Built Up Wood Girders
For Various Loads and Spans
(Based on Douglas Fur 4-SQUARE Guide-Line FRAMING; deflection not over 1/360 of span allowable fiber stress 1600lb/in^2

LOAD PER LINEAR FOOT OF GIRDER	LENGTH OF SPAN (FEET)				
	6	7	8	9	10
	NORMAL SIZE OF GIRDER REQUIRED (INCHES)				
750	6 x 8	6 x 8	6 x 8	6 x 10	6 x 10
900	6 x 8	6 x 8	6 x 10	6 x 10	8 x 10
1050	6 x 8	6 x 10	8 x 10	8 x 10	8 x 12
1200	6 x 10	8 x 10	8 x 10	8 x 10	8 x 12
1350	6 x 10	8 x 10	8 x 10	8 x 12	10 x 12
1500	8 x 10	8 x 10	8 x 12	10 x 12	10 x 12
1650	8 x 10	8 x 12	10 x 12	10 x 12	10 x 14
1800	8 x 10	8 x 12	10 x 12	10 x 12	10 x 14
1950	8 x 12	10 x 12	10 x 12	10 x 14	12 x 14
2100	8 x 12	10 x 12	10 x 14	12 x 14	12 x 14
2250	10 x 12	10 x 12	10 x 14	12 x 14	12 x 14
2400	10 x 12	10 x 14	10 x 14	12 x 14	
2550	10 x 12	10 x 14	12 x 14		
2700	10 x 12	10 x 14	12 x 14		
2850	10 x 14	12 x 14	12 x 14		
3000	10 x 14	12 x 14			
3150	10 x 14	12 x 14			
3300	12 x 14	12 x 14			

NOTES:
The 6" girder is figured as being made with three pieces 2" dressed to 1-3/4" thickness
The 8" girder is figured as being made with four pieces 2" dressed to 1-3/4" thickness
The 10" girder is figured as being made with five pieces 2" dressed to 1-3/4" thickness
The 12" girder is figured as being made with six pieces 2" dressed to 1-3/4" thickness
For solid girders, multiply above loads by 1.130 when 6" girders is used; 1.150 when 8" Girders is used; 1.170 when 10" is used and 1.180 when 12" girder is used.

3 Alternate method is using the chart provided below.

a Multiply the total weight of the load times the total floor load on the girder per square foot.

b Cross-reference the distance between the girder post and the material used ensuring the total is sufficient to support the weight calculated above.

GIRDERS	SAFE LOAD IN LB. FOR SPANS FROM 6 TO 10 FEET				
SIZE	6FT	7FT	8FT	9FT	10FT
6 x 8 SOLID	8306	7118	6220	5539	4583
6 x 8 BUILT UP	7359	6306	5511	4908	4062
6 x 10 SOLID	11357	10804	9980	8887	7997
6 x 10 BUILT UP	10068	9576	8844	7878	7086
8 x 8 SOLID	11326	9706	8482	7553	6250
8 x 8 BUILT UP	9812	8408	7348	6544	5416
8 x 10 SOLID	15487	14782	13608	12116	10902
8 x 10 BUILT UP	13424	12768	11792	10504	9448

(e) Estimating material for girders:

1 Laminated girder

a A girder requires intermediate support(s) (i.e. Piers, continuous wall). The spacing for this building is 10’ apart.

b Determine the best EOL for pier spacing at 10’. It has been determined that a 2" x 12" laminated girder is sufficient size material for this building.

EOL of 2" x 12" x _____’ is determined.

c Formula: Building length divided by best EOL = 1/4 girder x 4 for lamination = total girder material.

d EXAMPLE: 50' ¸ 10’ = 5 pcs (Round up); 5 x 4 = 20 pcs

e Add 10% waste: 20 x 1.1 = 22 pcs (Round up)

f Convert to Board Feet:

(22 pcs x 2" x 12" x 10’) ¸ 12 = _____BF

2 Solid girder:

a A solid girder will be created from heavy timber members and will not require lamination. It has been determined that a 8" x 12" is sufficient size material for this building.

b Determine the best EOL for pier spacing at 10’.

EOL of 8" x 12" x _____’ is determined.

c Formula: Building length divided by pier spacing = total pieces required (Round up, if needed).

50 ¸ 10 = 5 pcs

d Add 10% waste: 5 x 1.1 = 5.5 or 6 pcs

e Convert to BF: (6 pcs x 8" x 12" x 12’) ¸ 12 = _____BF

c. Floor joists

(1) Joists are wooden members, usually two or three inches thick, which make up the body of the floor frame. Joists as small as 2"x 6" are sometimes used in light building; these are too small for floors with spans over ten feet, but are frequently used in ceiling joists.

(2) Joists usually carry uniform load of materials and personnel known as the live load; dead load is the weight of the building.

(a) It distributes the load directly on ends to the nearest sills, girders, load bearing partitions, or load bearing walls.

(b) Space the joists 16" or 24" apart, on center or center to center (O.C. or O/C). Sometimes a spacing of 12" may be used for heavy loads.

(c) When placing the joists, always place on edge with the crown up because this counteracts the weight on the joist.

(d) In certain parts of the floor frame, to support heavily concentrated loads, a partition wall, or floor openings, it is necessary to double the joists. These double joists are called trimmer joists.

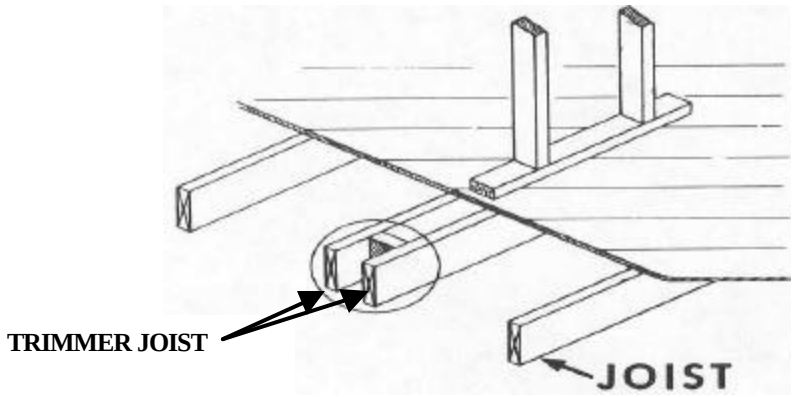

(3) Joists are secured by various methods.

(a) Resting the joist on top of the sill or girder is the most common, provided headroom is not restricted.

1 Joists are cut long enough to extend the full width of the sill or girder.

2 If joists are butt spliced midway on the girder; the joint must be scabbed.

(b) Ledger plates/strips allow the joist to be dropped lower creating more headroom.

1 Nail a 2" x 4" to the face, flush with the bottom, of the sill or girder. Use 20d nails every 12 inches.

2 If joists are notched, splitting can be prevented by using ledger plates/strips. Joist should not be notched over one-third of its depth.

(c) Metal fasteners, like straps, hangers and iron stirrups are among the strongest joist supports.

(4) Joists must be able to hold the weight it will carry.

(5) Estimating material for floor joists.

(a) You must determine the number of floor joists you will need. Determine the center to center floor joist spacing; for this example the joists will be spaced 16" on center (16" = 1.33’).

1 Formula: Divide the length of the building, by the floor joist on center spacing, to get the number of spaces between joists.

50’ Building Length = _____(Round up, if needed) =_____**Spaces**
1.33’ Joist Spacing

2 Add one to the total of joist spaces (for the extra end joist).

38 spaces + 1 = 39 joists

3 Add 2 trimmer joist for each partition, then add total of trimmer joist needed to floor joists. **Note: Outside floor joist for columns and piers will be doubled to carry the weight of the exterior wall**.

39 pcs(answer after adding starter)
+ 4 pcs of trimmer joists(2 partitions x 2 trimmers/wall)
43 joists for one span

4 Multiply the number of joists per span by the number of identical spans.

43 joists x **2 spans of joists** = _____Joists

5 Add 10% for waste:

86 pcs x 1.1 waste = _____or _____pcs

6 Determine an EOL or Economical Order Length.

EOL of 2" x 8" x _____’ is predetermined.

7 Change to BF: (95 pcs x 2" x 8" x 12’) ¸ 12 = _____BF

d. Headers or Headerband.

(1) The headerband is placed on the ends of the floor joists at right angles. Headerband forms a box that encases all the floor joists.

(2) Estimate material for header.

(a) You must determine the number of headers you will need.

1 Header is the same as the length of the building, 50’.

2 There are two (2) headers; one on each side of the building.

(b) Determine the best EOL; ____" x ____" x _____’.

(c) Determine the number of 2" x 8" x 10’-0" required for the header by dividing the length of the building by the EOL.

50 ¸ 10 = _____(Round up, if needed)

(d) Since there are two headers multiply times 2.

2 headers x 5 pcs = 10 pcs: 10’-0"

(e) Add 10% waste: 10 x 1.1 = 11 pcs: 2" x 8" x 10’-0"(Round up, if needed)

(f) Change to BF: (11 pcs x 2" x 8" x 10’) ¸ 12 = _____BF

e. Bridging. When joists are used over a long span, they have a tendency to sway from side to side. Therefore, add bridging to stiffen the joist and tie the joist together. There are several types of bridging.

(1) Horizontal Bridging. It is necessary the use the same dimension width size lumber as the joists. These are placed perpendicular to and between the joists in the middle of the joist run. They can also be offset slightly to allow room to nail them to the joists, which is the most common method.

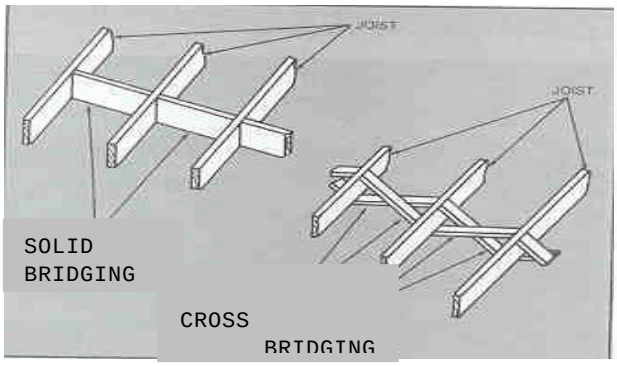

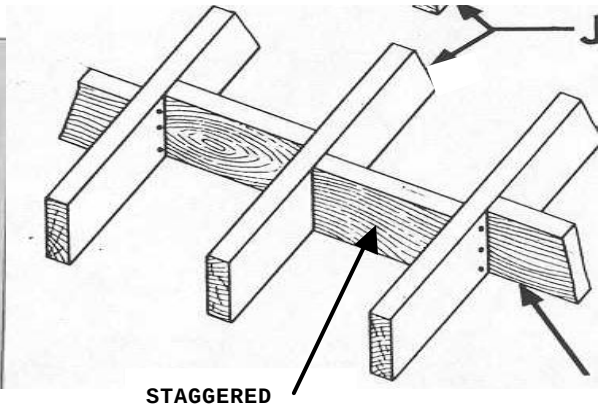

(2) Cross Bridging. Cross bridging looks like a cross and consists of pieces of lumber, usually 1" x 3" or 2" x 3" in size, cut and placed diagonally between the floor joists. When nailing onto the bridging, nail the tops of the bridging first. Do not nail the bottoms until the subfloor is laid. This will give the joist time to adjust to its final position.

(3) Estimate for material.

(a) You must determine the number of pieces of bridging required. Count the spaces between the floor joists, then multiply by the number of rows of bridging.

_____spaces = _____pcs of solid bridging x **3** rows = _____pcs of bridging.

NOTE: Multiply answer by 2, if cross bridging.

(b) Determine the EOL for bridging compared to floor joist spacing.

1 One piece of horizontal bridging is 14.5" for floor joists that are 16" on center or 22.5" for 24" on center.

2 Divide EOL length by the size of piece of bridging to determine how many pieces of bridging you can get out from one EOL.

a EOL for this problem is 2" x 8" x 16’-0"

b Convert 16’ to inches:

16’ x 12" = _____ , 14.5" = _____**or** _____**pcs**
(EOL) (12 in/ft) (Lgt of bridging)

(c) Determine the # of EOL needed.

1 (Divide the number of pieces for bridging needed by the number of pieces from one EOL) = number of EOL needed.

2 Example: 114 pcs of bridging needed, 13 pcs of bridging can be cut out of one 2" x 8" x 16’-0" board.

114 ¸ 13 = _____(Round up) or _____**pcs**: 16’-0"

(d) Add 10% waste: 9 x 1.1 = _____(Round up) or _____pcs

(e) Change to bdft: (10 pcs x 2" x 8" x 16’) ¸ 12 = _____BF

f. Finish Floors and Subfloors.

(1) Finish floor and subfloors are the same in military construction. A finish floor in the theater of operations in most cases is 3/4" plywood material, square edged. It is laid directly on the floor joists and nailed with eight-penny common nails in every joist.

(2) Estimate material.

(a) A finished floor in the theater of operations, in most cases, is 1/2 inch or 3/4-inch plywood material. A standard panel size is 4 ft wide by 8 ft long, which equals 32 square feet (sqft) per sheet.

(b) Determine total surface area = Length times width of bldg.

50’(Lgt.of floor) x 20’(Width of floor) = 1000 sqft of surface area

(c) Divide total sqft of surface area by 32 (sqft/sheet of plywood)

1000 ¸ 32 = _____sheets **(DO NOT ROUND UP UNTIL THE FINAL ANSWER FOR PLYWOOD CALCULATIONS)**

(d) Add 20% waste: 31.25 x 1.2 = _____(Round up) or

_____sheets; record on take off sheet.

13. **STAIR FRAME**:

a. Stringers. The sides that supports the weight of the live and dead weight on the stairs.

(1) Consist of material 2" or 3" thick and 8" wide or wider.

(2) Stringer material may be cut or blocks may be secured to the stringer to hold the step of the stairs.

(3) Intermediate stringer(s) may be required due to the width of the stairs or excessively heavy live load.

b. Treads. Material that forms the horizontal step and distributes the weight to the stringers.

c. Risers. Risers are materials that covers the vertical opening created between the stringers and the treads.

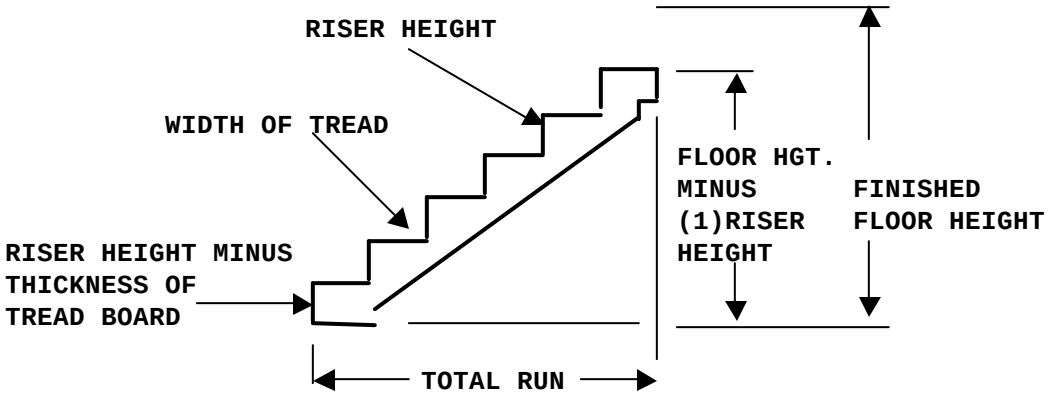

d. Stair Design. Most important in stair design is the mathematical relationship between the riser and tread. The ideal rise and tread totals 17 inches. The following are two rules of thumb that may be used to check the dimensions of risers and treads.

(1) Riser height + tread width = between 17 and 19 inches

(2) Riser height x tread width = between 70 and 75 inches

(3) If the sum of the height of the riser and the width of the tread falls between 17 and 19 inches, and the product of the two equals between 70 and 75 inches, the design is satisfactory.

(a) Determine the number of risers for the stairs and each riser height.

1 Story Pole Method. Using a story pole with the finished floor height marked off on it and a divider set at seven inches, step off the distance on the story pole. If this distance will not divide evenly into the length of the story pole, adjust the divider span slightly and again step off the distance. Continue the adjusting and the stepping off until the story pole is marked off evenly. The span must be near seven inches. This represents the rise of each step. The number of spaces stepped off evenly by the divider on the story pole is the number of risers and the span of the divider is the height of each riser.

2 Mathematical Method. Convert the finished floor height into inches to get the total rise. Divide the total rise by 7 (Round up to the next whole number) to acquire the number of risers. Then divide the total rise by the number of risers (Round up or down to the nearest 1/4") to acquire the height of each riser. Example: The finished floor height is 6 feet 10 inches.

Step 1: 6′ x 12" = 72" + 10" = _____" **total rise**

Step 2: 82" ¸ 7 = _____(ROUND UP) or _____**risers**

Step 3: 82" ¸ 12 risers = _____" **height of each riser**

Step 4: Convert to closest 1/4" measurement (7" or 6.75″).

7.00	6.83
-6.83	-6.75
.17	.08 **Riser height is closer to 6-3/4"**

(b) Determine the number of treads for the stairs and the width of each tread.

1 The number of treads is acquired by subtracting the number of risers by one.

2 The width of the treads is determined by the two rules of thumb discussed previously. Adjustments are made to the tread width to ensure the stair design is satisfactory.

3 Example for a finished floor height of 6 feet 10 inches.

Step 1: 12 risers
- 1 actual finished floor is the last riser
11 treads

Step 2: 6.75"(Riser hgt) + 10.25"(Tread width) = 17

Step 3: 6.75"(Riser hgt) x 10.25"(Tread width) = _____

Step 4: Adjust by increasing the tread width to satisfy the stair design.

Sum of hgt + width = 17 to 19 inches, and the product of hgt x width = 70 to 75 inches

6.75" + 10.50" = _____ and 6.75" x 10.50" = _____

Step 5: Calculate the total run

11 Treads x 10.5″ Tread width = 115.5″ or 9′ 7-1/2″

(c) Estimate material.

Finish floor height = 82″
(12) Risers at 6-3/4″ height
(11) Treads at 10-1/2″ width
Total run = 115-1/2″

1 Determine stringer material.

a Pythagorean theorem:

Step 1:(_____" **x** _____") **+** (_____" x _____") = C^2
Floor height **Total run**

Step 2: (_____") + (_____") = C^2

Step 3: $\sqrt{\quad \cdot \quad}$ " = C^2

Step 4: _____" = C

(2) Convert to feet: 141.64833" ¸ 12 = _____’

(3) Convert the decimal point in feet into inches:

._____feet x 12"/foot = ___._____” or _____(.6" from conversion table = 5/8")

(4) Overall 141.64833" **= 11’ 9-5/8**"

(5) EOL determined at 2" x 10" x 12’; 2 sets of 3 feet wide stairs.

(a) 2 stringers/stair x 2 sets of stairs = 4 pcs

(b) Add 10% waste: 4 x 1.1 = 4.4 or 5 pcs: 2" x 10" x 12’

(c) Convert to BF:(5 pcs x 2" x 10" x 12’) ¸ 12 = _____BF

f. Determine tread material. EOL determined is 2" x 4" x 12’.

(1) Number of tread boards required:

3 pcs/tread (3.5" x 3 = 10.5")
x 11 treads/stair
33 pcs
x 2 sets of stairs
66 pcs: 2" x 4" x 3’

(2) Number of EOL required: 66 pcs ÷ 4 pcs/EOL =_____pcs

or _____pcs: 2" x 4" x 12’

(3) Add 10% waste: 17 x 1.1 = _____or _____pcs

(4) Convert to BF:

(_____pcs x 2" x 4" x 12’) ¸ 12 **=** _____BF; record on takeoff sheet.

14. **Wall Frame**: Wall framing includes regular studs, diagonal bracing, cripples, trimmers, headers, fire blocks, corner posts, partition posts, door and window headers, and window sills.

a. Sole Plate. The bottoms of all partition walls and outside walls are finished with either a 2" x 4" or with a piece of lumber corresponding with the thickness of the wall. This is laid horizontally on the floor or joists. It carries the bottom end of the studs and is called the sole or sole plate. The sole plate should be nailed with 16 penny or 20 penny nails at each joist it crosses.

b. Top Plate. The top plate ties the studding together at the top and forms a finish for the walls. The top plate serves as a connecting link between the wall and roof. The top plate may be double or single (Most common are doubled).

c. Wall Studs. Studs are the closely placed vertical members of partition and outside walls. Their purpose is to support the weight of the upper floors and provide a framework for interior and exterior finishes. Studs are normally spaced 12, 16, or 24 inches on center.

d. Corner/T Posts. The studs used at the corners of frame construction are usually built up from three or more ordinary studs to provide greater strength. These built-up assemblies are called corner posts or partition posts. The corner posts may be made in the following ways.

(1) A corner post may consist of a 4" x 6" with a 2" x 4" nailed on the board side, flush with the edge. This type of corner is for a 4-inch wall. Where the walls are thicker, heavier timber is used.

(2) A 4" x 4" may be used with a 2" x 4" nailed to each of two adjoining sides.

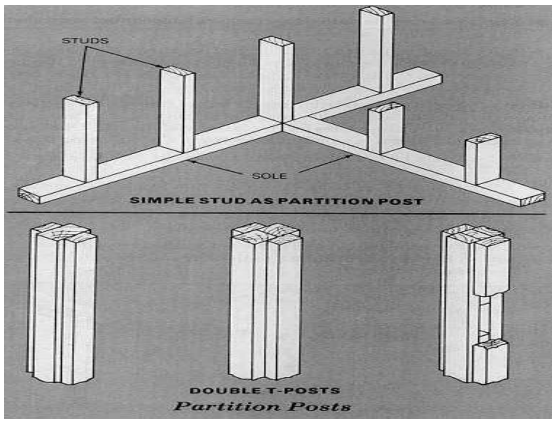

(3) Two 2" x 4" may be nailed together with blocks between them, and a two by four flush with one edge.

(4) A 2" x 4" may be nailed to the edge of another 2" x 4". The edge of one flush with the side of the other. This type is used extensively in the theater of operations where no inside finish is needed.

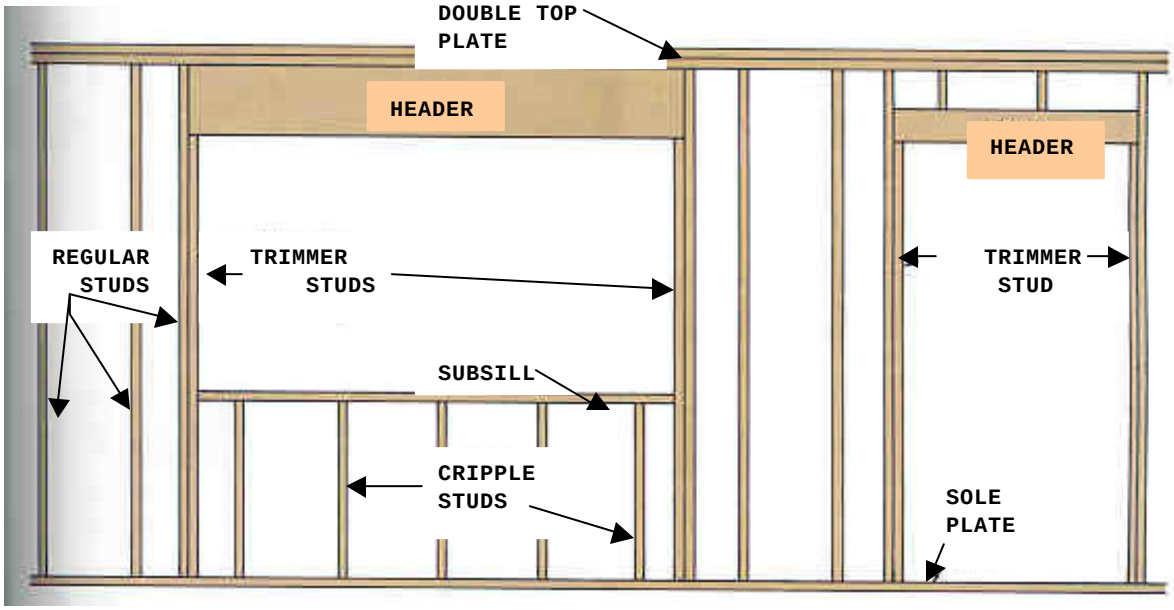

e. Wall frame openings in hasty construction have no frames because the studs on each side of the opening act as a frame.

(1) Trimmer Studs. Trimmer Studs are normally placed 16 inches apart on center. When it is desirable to double the post of the door opening, the outboard studs are first placed into position and nailed securely. Then the short studs, or trimmers, are cut to the size of the opening. The trimmer studs are then nailed to the inside face of the outside studs so that the header can sit on top of trimmer studs as shown in diagram on page SH-15.

(2) Headers. The header is the horizontal member located over the tops of window and door openings. It is usually a doubled two-inch board, placed on edge, which transfers any weight to the trimmers.

(3) Sub-sill. A horizontal member which supports the window component and distributes any load to the studs. Usually a board of two inch material laid flat at the bottom of the rough opening of a window.

(4) Cripple (Jack) studs. Distributes the weight from the top plate to the header, or the weight on the subsill to the sole plate.

(5) Doorframe openings are generally 2-1/2 inches larger than the actual door. Window frame openings varies according to the style of the window component.

f. Plumbing and straightening walls

(1) After the corner posts, T-post and intermediate wall studs have been nailed to the plates, the walls must be plumbed and straightened so that the permanent braces and rafters may be installed. Using a level or a plumb bob and a chalk line does this. To plumb a corner using a plumb bob, first attach a string to the plumb bob long enough to extend the plumb bob as far down the corner post as possible. Using a ruler laid upon the top of the corner post, measure out 2 inches allowing the plumb bob to hang free. The bottom of the plumb bob string should also measure 2 inches from the post. Once the post is plumbed the temporary braces are placed.

(2) To straighten the wall after corner posts have been plumbed, attach a string to the outside of a corner post and run the string to another corner. Place a block of wood (of equal measurement) under the string at the corners for clearance. Using another dimension block of wood, check the distance between the wall and the string, moving the wall and placing temporary braces to hold the wall. Once all walls, interior and exterior, have been straightened permanent bracing is added and the temporary bracing removed.

g. Braces. Bracing is used to stiffen framed construction and make it rigid. Bracing may be used to resist winds, storms, twisting or strain stemming from any cause. There are three methods commonly used to brace frame structures.

(1) Let-in bracing is set into the edges of studs, flush with the surface. The studs are always cut to let in the braces; the braces are never cut. Usually 1" x 4" or 1" x 6" are used, set diagonally from top plates to sole plates.

(2) Cut-in bracing is toenailed between the studs. It usually consists of 2" x 4" cut at an angle to permit toe nailing which are inserted in diagonal progression between studs running up and down from corner post to the sill or sole plates.

(3) Diagonal sheathing is the strongest type of bracing. Each board braces the wall. If plywood sheathing 5/8 inch thick or more is used, other methods of bracing may be omitted. Plywood can be used to sheath corners and the rest of the building may be sheathed with any sheathing material.

h. Exterior wall sheathing.

(1) The exterior surfaces of a building usually consist of vertical, horizontal, or diagonal sheathing and composition, sheet metal, or corrugated roofing. However, in theaters of operation those materials are not always available and substitutes must be provided. Concrete blocks, brick, stone, rubble metal or earth may be substituted for wood in treeless regions. For substitute, expedient, and improvised construction refer to TM 5-302 for details.

(2) Sheathing is nailed directly to the framework of a building. It is used for the following:

(a) To strengthen the building.

(b) To provide a base wall onto which the finish siding can be nailed.

(c) To act as insulation.

(d) In some cases to be a base for further insulation.

(3) Some of the common types of sheathing are:

(a) Wood, 1 in. thick by 6, 8, 10, or 12 inches wide of #1 common square or matched edge material.

(b) Gypsum board, 1/2 in. thick by 4 feet wide by 8 to 10 feet long. Made by casting a gypsum core within a heavy water-resistant fibrous envelope.

(c) Fiberboards, 25/32 in. thick by 2 or 4 feet wide by 8, 9, 10, or 12 feet long.

(d) Plywood, 1/4, 3/8, 1/2, or 5/8 in. thick by 4 feet wide by 8,10, or 12 feet long. (Most common).

i. Estimate wall frame materials.

(1) Sole Plate and Double Top Plate.

(a) Determine the perimeter of the building: 20′ x 50′

50′ + 50′ + 20′ + 20′ = _____ or

(50′ + 20′) x (2 sides & ends)= _____ LnFt

(b) Add any additional length for partitions: 2 partition walls

20′+ 20′= 40′ LnFt of partitions
+ 140′LnFt of bldg perimeter
180 total linear feet of bldg and partition(s)

(c) Multiply total linear feet by number of sole plates and top plate(s). There are two top plates and one sole plate for a total of three plates.

180′ total Lnft x 3 plates = _____ LnFt for all plates

(d) Determine the best EOL. EOL is predetermined 2" x 4" x 10′

_____(Lnft of all plates) ÷ 10(EOL) = _____pcs: 2″ x 4″ x 10′
(Round up, if needed)

(e) Add 10% waste:

54 x 1.1 = _____ (Round up, if needed) or _____pcs

(f) Convert to BF: (_____x 2" x 4" x 10’) ¸ 12 **=** _____BF

(2) Studs.

(a) The perimeter of the building plus the total length of all partitions is the total wall linear feet (The total wall linear feet were determined in the last problem).

(b) Determine the number of spaces. The total linear feet divided by center to center spacing of studs will equal the number of spaces.

_____Lnft ÷ 1.33’Stud spacing **=** _____ (Round up to the

next whole number, if needed) or _____ spaces

(c) Add to the total spaces one additional stud per corner, if interior finish is not required. If interior finish is required, add additional two studs per corner for corner post and T-post.

_____corners x 2 studs (Interior is finished) = _____corner studs
+ 136 wall spaces

_____total studs

(d) Add one additional stud per opening to the total studs.

1 Windows exterior, door exterior, and windows interior, doors interior.

2 Add to total studs: 4 Window Exterior
2 Door Interior
+ 1 Door Exterior

_____Total Openings

+_____ Studs for Walls and corners

_____ Total studs needed for Building

(e) Determine an EOL. Standard wall is 8’ high;

EOL = ____" x ____" x _____’

167 studs required = number of EOL required

(f) Add 10% waste:

_____pcs x 1.1 waste = _____ or _____pcs

(g) Convert to BF:

(_____ x 2" x 4" x 8’) ¸ 12 **=** _____BF

(h) **Alternate (expedient) method for estimating wall frame studs**.

1 Determine total linear feet of walls and partitions.

(50’ + 20’ + 50’ + 20’ walls) + (20’ + 20’ partitions) = _____’

2 If studs are 16" O/C divide total linear feet by one. If studs are 2 feet O/C divide total linear feet by 1.33’.

(a) Studs needed for 16" O/C: 180 ¸ 1 = _____

(b) Studs needed for 2’-0" O/C:

_____ ¸ 1.33 = _____ or _____

3 Total studs needed include extra for corners, extra for door and window openings and waste factor.

4 Convert to board feet.

(3) Exterior wall sheathing.

(a) Determine the square footage of the outside walls. Walls are 8 feet high.

50’ one side	20’ one end
x 8’ height	x 8’ height

(_____sqft + _____sqft) = _____ total sqft
x 2 sides

_____ sqft to be covered

(b) Divide total sqft by the square footage of one sheet of siding or sheathing (4’ x 8’ = 32 sqft/sheet).

(_____total sqft) ¸ (32 sqft/sheet) = _____sheets**(DO NOT ROUND UP)**

(c) Add 20% waste: _____ x 1.2 = _____sheets; record on take off sheet.

(8) Gable sheathing.

(a) Determine the square footage of the gable end of the building. 4/12 pitch. The following are key gable end sheathing and roofing terms.

1 The "RUN" is 1/2 the width of the building to be covered

2 The "PITCH" is the slope of the roof determined by the prints

3 The "CONSTANT #" is the size of the material used for the rafter.

a 2" x 4" material = 4

b 2" x 6" material = 6

4 Formula: ("RUN" x rise of "PITCH") + "CONSTANT #" for rafter material = gable rise (in inches) ¸ by 12 to convert to feet = gable rise (in feet) x total width of bldg = sqft of one gable ¸ by 32 = # sheets of plywood x 1.2 waste factor = # of sheets x 2 gable ends = total sheets of plywood for both gable ends **(DO NOT ROUND UP UNTIL RECORDING THE LAST ANSWER TO THE TAKE OFF SHEET).**

(b) Example: (_____’ x _____) + _____ = _____" ¸ 12 =

_____’ x 20’ = _____ ¸ 32 = _____ x 1.2 = _____ x 2 =

_____ **or** _____ sheets of plywood; record on take off sheet.

(9) Interior wall and ceiling sheathing.

(a) Determine the square footage for interior wall and ceiling sheathing.

{[Total linear footage + (double length of all partitions walls)] x height of wall} divided by 32 = # of sheets for interior wall, then add ceiling (same as the subfloor prior to adding the 20% waste factor) = total sheets x 1.2 waste = total sheathing required.

Sheets to cover walls: (140 + _____) **=** _____x 8 = _____¸ 32 = _____

Sheets to cover ceiling: (50 x 20) = 1000 ¸ 32 = _____

Total sheathing: _____Walls **+** _____Ceiling = _____
x 1.2 waste

_____(Round up)

or _____sheets

(b) Determine sheet rock nails to secure sheathing.

1 Sheet rock nails are calculated at the rate of one pound per every 100 square feet.

2 Formula: {[(Total linear footage + double length of all partition walls) x height of wall] + Square footage of the ceiling} = total square footage ¸ 100 sqft/Lb of nails.

_____(Total sqft) ¸ 100 = _____Lbs (DO NOT round up) x 1.1

waste =_____(Round up) or _____Lbs of sheet rock nails.

15. **ROOF FRAMING AND COMPONENTS**:

a. Types of roofs.

(1) Lean-to or Shed roof. This nearly flat roof is used where large buildings are framed under one roof. It may also be used where hasty or temporary construction is needed, and where sheds and additions to buildings are erected. The slope of this roof is one direction.

LEAN-TO or SHED ROOF

GABLE ROOF

(2) Gable roofs. This roof has two roof slopes that meet at the center, or ridge, forming a gable. It is the most common roof because it is simple and economical, and may be used on any type of structure.

(3) Hip roof. This roof has four sides or slopes running towards the middle of the building.

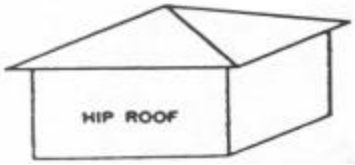

(4) Gable and Valley roof. This roof is formed by two intersecting gable roofs, which meet at a valley. Each roof slants in a different direction. This roof is seldom used, since it is complicated and requires much time and labor.

Gable and Valley Roof

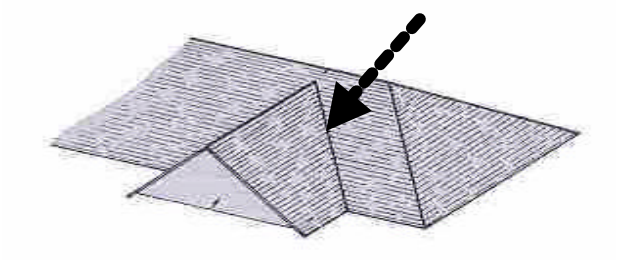

b. Components

(1) Ceiling joists form the framework of a room. They are usually lighter than floor joists, but must be strong enough to resist buckling or bending. Ceiling joists starts at one side of the building and continues across, parallel to the rafters.

(2) Ridge (Ridge Board). The ridge is the highest horizontal framing member, which helps align the rafters and tie them together at the upper end.

(3) Rafters. Rafters make up the main body of the framework of roofs. They do for a roof what the floor joists and studs do for the walls.

(a) Types of rafters:

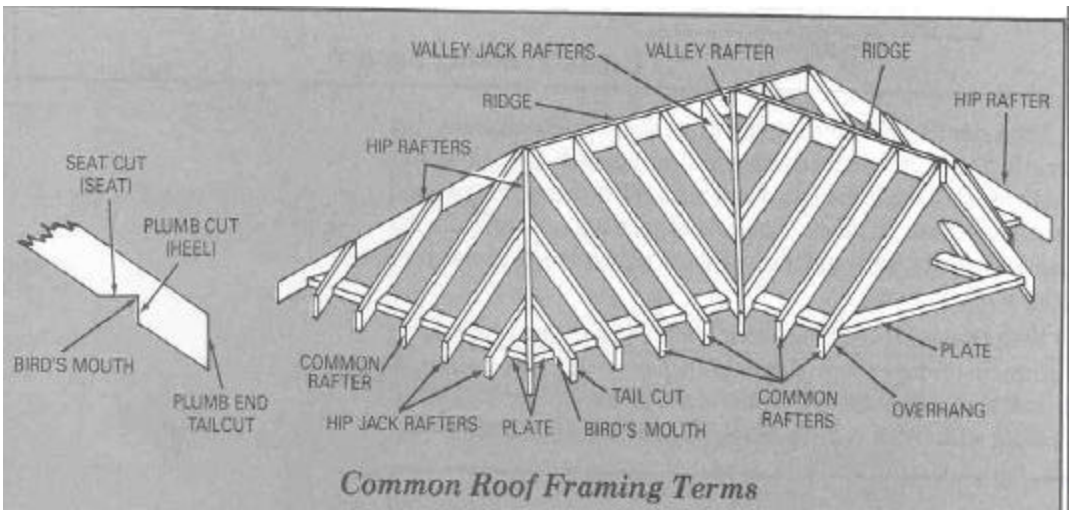

1 Common Rafters. Common rafters are the framing members that extend at right angles from the plate line to the ridge of the roof. They are called common rafters because they are common to all types of roofs and used as the basic for laying out rafters.

2 Hip rafters are roof members that extend diagonally from the corner of the top plate to the ridge board.

3 Valley rafters extend from to top plate to the ridge boards along the lines where the two gable roofs intersect.

4 Jack rafters

a Hip jack rafters extend from the top plate to the hip rafter.

b Valley jack rafters extend from the ridge board to the valley rafter.

c Cripple jack rafters are placed between a hip and valley rafter.

(4) Pitch of the roof is the angle of the roof slope in relation to the horizontal plane. This is measured as a ratio, i.e. 4/12, 5/12.

(5) Bird's mouth is a cutout, near the bottom of the rafter that fits over the plate.

(6) Overhang is the portion of the roof, which extends beyond the outside edge of the plate or walls of a building. The overhang is often referred to as the lookout, eve, or tailpiece.

(7) Truss construction. Reinforced rafters where large spans provide wide unobstructed floor space.

(a) Rafters for truss construction are laid out the same as a common rafter except no shortening allowance, as there is no ridge board.

(b) Upper and lower chord

1 Ties the rafter and distributes the weight.

2 Lower chord becomes ceiling joist.

3 May be one piece or jointed, stagger the joints.

(c) Diagonal brace

1 Ties the upper and lower chord together and helps distribute the weight.

2 General rule for braces: 15 - 25 degrees.

(d) Types of trusses. Details for trusses are usually found in the "detail drawings" of blueprints.

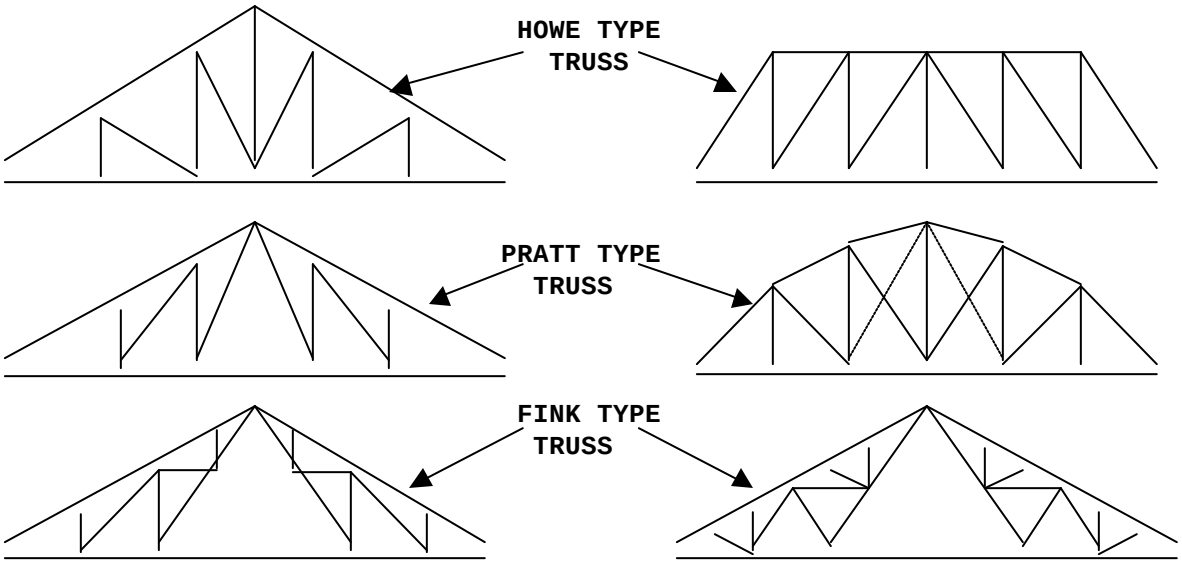

(e) Cut all pieces from one pattern and make a jig.

(f) Hand or power (crane, gin pole, block and tackle) may erect trusses.

(8) Roof Coverings. Asphalt roofing products are widely used in modern construction; the components of roof coverings are as follows:

(a) Roof Sheathing. Roof sheathing should be smooth, dry and securely attached to the rafters or ridge board. The roof sheathing must provide an adequate base to receive and hold the roofing nails or fasteners, 1/2, 5/8, or 3/4” plywood adequate enough as a nailing surface.

(b) Flashing. This is placed between roof sheathing and roof underlay in places especially vulnerable to leakage and must be water tight.

(c) Roofing Underlay. Roofing underlay is made of roofing felt and is placed over the secured roof sheathing. Roofing felt or underlay comes in rolls 36" wide and should be laid with a 4” lap. Felt paper is laid for extra protection. A roll usually covers 400 or 500 sqft. The felt or tar paper is rated by weight, 15-50 Lbs according to it’s thickness.

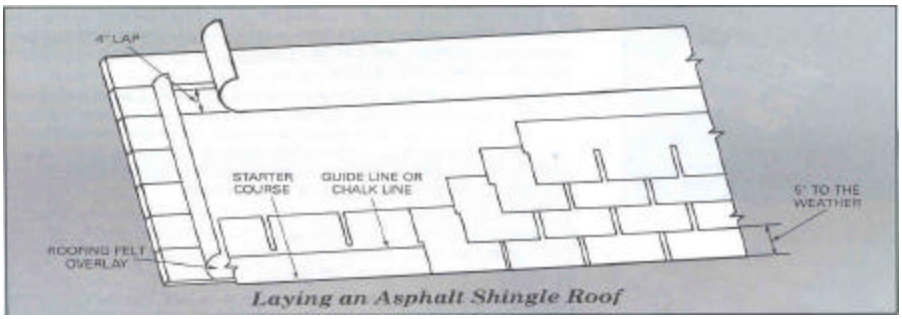

(d) Asphalt Roofing Singles. The most commonly used, is the flat strip. They must be weather resistant and they measure 1′ x 3′. Their base material is organic felt and/or fiberglass. This base is saturated and then coated with a special asphalt that is resistant to weathering. A surface of ceramic-coated mineral granules is then applied. The mineral granules shield the asphalt coating from the sun’s rays, add color, and provide fire resistance. Roofing Shingles may come as a roll or single strips. Most common is single strips, where 3 or 4 bundles will cover a square (100 square feet). 1-1/4″ or 1-1/2″ zinc coated nails are the best nails to use.

1 Laying of Asphalt Roofing Singles. Each row of singles is called a course. The first course at the eaves (the starter course) is laid by inverting the first course of shingles. Stretching a guideline or snapping a chalk line from edge to edge begins each course that follows. This positions the course. The above shows the method of laying a 1′x 3′ asphalt strip shingle roof. Strip shingle should be nailed with a 1 inch copper or hot dipped galvanized roofing nails, two to each tab; this means six nails to each full strip. Nails should be placed about 6-1/2 inches from the butt edges to insure that each nail will be covered by the next course (blind nailing) and driven through two courses. There should be no more than 3/4-inch overhang all the way around the roof.

c. Estimate roof materials.

(1) Determine the number of truss required for the building. The building length is divided by the center to center spacing of the truss. For this example, the spacing is 24" O/C.

50′ ¸ 2′ = _____ truss (Round up, if required)
+ 1 truss to account for the first position

_____=
+ 2 false rafters

_____total truss

(2) The estimation of truss framing members requires the estimator to remember that the rise and run components will alter the distance that the framing member must cover.

(a) The formulas for determining the component lengths begin the same way as the sheathing for the gable. Determine the total rise of the roof; the building from the previous projects has been 50’ X 20’ with a 4/12 pitch.

"RUN"		"PITCH"		"CONSTANT"		
(10	x	4) +		4	=	44" or 3.66666’ or 3’- 8"

(b) With the span and the rise measurements, the upper chord length can be determined by using the "Pythagorean Theorem".

Step 1: (10 x 10) + (**3.66666** x **3.66666**) = C^2

Step 2: 100 + 13.444395 = C^2

Step 3: $\sqrt{113.44439}$ = C^2

Step 4: _____ = C

Step 5: 10.651027’ = 10’ + (.651027')
x 12"
10’ + (7.812324") or 10’-7 13/16"; The upper chord length is now determined.

Step 6: If an overhang is required, the additional length will be added to the length. With a 1’ overhang the total length of the upper chord is now 11’ 7-13/16".

(c) The truss will consist of 2 upper chords, 2 lower chords, and 1 center post. Using our 28 truss required, we determine we need;

1 Upper chord

a Best EOL: **2" x 4" x _____’-0"**

b _____(# of truss) x _____(# of upper chords) = _____pcs

c Add 10% waste:_____ x 1.1 = _____ or _____pcs

d Convert to BF: (_____pcs x 2"x 4"x 12’) ¸ 12 **=**_____BF

2 Lower chord

a Best EOL: 2" x 4" x _____’

b _____(# of truss minus false rafter)

x _____(# of lower chords/truss)

_____ pcs

c Add 10% waste: 52 x 1.1 =_____or _____ pcs

d Convert to BF:(_____x 2" x 4" x 10’) ¸ 12 **=** _____BF

3 Center post **Note:** The actual length of the center post is the riser height minus the width of the upper and lower chords.

a Number of center post: _____pcs at _____"

b Determine the best EOL. ____" **x** ____" **x** ____’

c Exact number of EOL needed: 26 pcs ¸ 5 (pcs from the best EOL of _____’) = _____ or _____pcs of 2" x 4" x 16’

d Add 10% waste: 6 x 1.1 = _____ or _____ pcs

e Convert to BF: (____ **x 2" x 4" x** _____’) ¸ 12 **=** _____BF

(3) Roof sheathing.

(a) Determine the amount of roof area to be covered: multiply the length of the upper chord times (the length of the building plus any overhang desired). The overhang over the gable is 2 feet.

Upper chord is 11’ 7-11/16" or round up to the next whole feet = 12’

[12’ x (50’ + 4’)] = _____ sqft/side

(b) Multiply this answer times 2 since there are 2 sides to the roof.

_____ x 2 = _____ total square feet

(c) Divide by 32 sqft/sheet of plywood

_____ ¸ 32 = _____sheets (DO NOT ROUND UP)

(d) Add 20% waste: _____ x 1.2 = _____(Round up, if needed)

or _____sheets of 1/2" plywood

(4) Roofing felt paper

(a) Rolls of either 400 or 500 square foot per roll.

(b) Example: 1296 ¸ 400 = _____ rolls(Round up, if

needed) or _____rolls
x 1.1 waste

_____rolls

(5) Asphalt roofing (Shingles)

(a) Material comes in either **100 square feet rolls** or in squares, which require either **3 or 4 bundles to make a square (one square covers 100 square feet).**

(b) Example:

1296 ¸ 100 = 12.96 squares or 13 squares
x 1.1 waste
14.3 or 15 squares
x 3 bundles/square

_____bundles of shingles

(6) Roofing nails

(a) Nails are calculated at the rate **of one pound per every 100 square feet** of roofing shingles.

(b) Example: 1296 ¸ 100 = 12.96 Lbs
x 1.1 waste
14.256 pounds
x 2 felt and shingles
28.512 or 29 Lbs of roofing nails

16. **ESTIMATE NAILS FOR SHEATHING AND FRAMING:**

a. Nails are ordered by the pound (Lb). The first method of determining nail requirements is called the mathematical formula. There are three different formulas/method that are used.

(1) The first formula is for determining the amount of nails for flooring, sheathing, and other 1" material, using 2d to 9d nails.

(a) First determine the total board footage of all 1" material (All plywood material is considered one inch thick; there is no need to divide by 12 as plywood is already in feet; 4’ x 8’).

1 **38** sheets for floor
42 sheets for walls
6 sheets for gable

+ **49** sheets for roof

_____total sheets of plywood

2 (_____sheets x 1" x 4′ x 8′) =_____BF of plywood

+ **0** BF of 1" lumber

_____Total BF

(b) The next step is to determine the pounds of nails. The formula is: Lbs of nails (2d - 9d) = (nail size x BF) ¸ constant number (400 for 2d to 9d nails).

EX: (_____**d** x 4320 BF) ¸ _____ **=** _____ (DO NOT ROUND UP)
x 1.1 waste

_____ or _____Lbs of 8d nails

(2) The second formula is used for calculating nails for framing lumber. This includes 2" material and larger, using 10d to 60d nails. The formula is the as the sheathing formula using 600 as the constant number for 10d to 60d nails. Lbs of nails = (nail size x BF) divided by 600.

(a) Using the material takeoff sheet list all board footage of 2-inch material. Add all framing board footage to get a total.

(Sills, joist, studs, etc.): 140 + 226.66 + 1520 + 146.66 + 213.33 + 400 + 981.33 + 496 + 386.66 + 74.66 = **4585.3** BF

(b) Determine the pounds of nails.

(_____**d** x _____**)** ¸ _____= _____(DO NOT ROUND UP)
x 1.1 (Waste)

_____or _____ of 16d nails

(3) The third method is the "Consumption Factors for Expendable Supplies" table.

Framing		
	8d common	5 Lbs/Mfbm
	10d common	15 Lbs/Mfbm
	16d common	**10 Lbs/Mfbm**
Sheathing (8d common)		30 Lbs/Mfbm
Flooring (8d casing)		30 Lbs/Mfbm
Roofing (8d common)		30 Lbs/Mfbm
Wall board (6d common)		15 Lbs/1000sqft
Trim	4d finish	3 Lbs/1000 Lnft
	6d finish	7 Lbs/1000 Lnft
	8d finish	14 Lbs/1000 Lnft

Note: Mfbm = thousand foot board measure

(a) EXAMPLE: **4585.3 BF or 5 Mfbm** of 2" framing lumber using 16d nails.

(b) Using table for 16d nails: 10 Lbs/Mfbm
x 5 total Mfbm of 2" lumber
50 Lbs of 16d nails

(c) NOTE: BE ALERT TO THE GREAT DIFFERENCE BETWEEN THE MATHEMATICAL FORMULA AND THE CONSUMPTION FACTORS TABLE METHOD.

17. **ESTIMATE WORK HOURS**:

a. There are to many factors to get an exact completion time on any projects (i.e. number of workers and their skill level, equipment availability and it's condition, weather conditions, etc.)

b. Estimations are acquired by using the Manpower Estimation Tables in either the references, FM5-551 (Appendix C) or the TM 5-333.

(1) Example: For every 1000sqft of plywood subfloor = 16 man hours

(2) **Note: 16 man-hours is with a typical crew of 1 leader and 4 men**.

18. **Controlled Practical Application**:

a. The following student materials are needed to complete this practical application.

(1) Student handout

(2) Calculator

b. Read all directions carefully.

c. You will be informed as to the result of this practical application as soon as they become available.

d. You have 3 hours in which to complete this practical application. Note the time now. You may begin.

Situation: You are given a building with the following dimensions of 18 feet wide and 29 feet long.

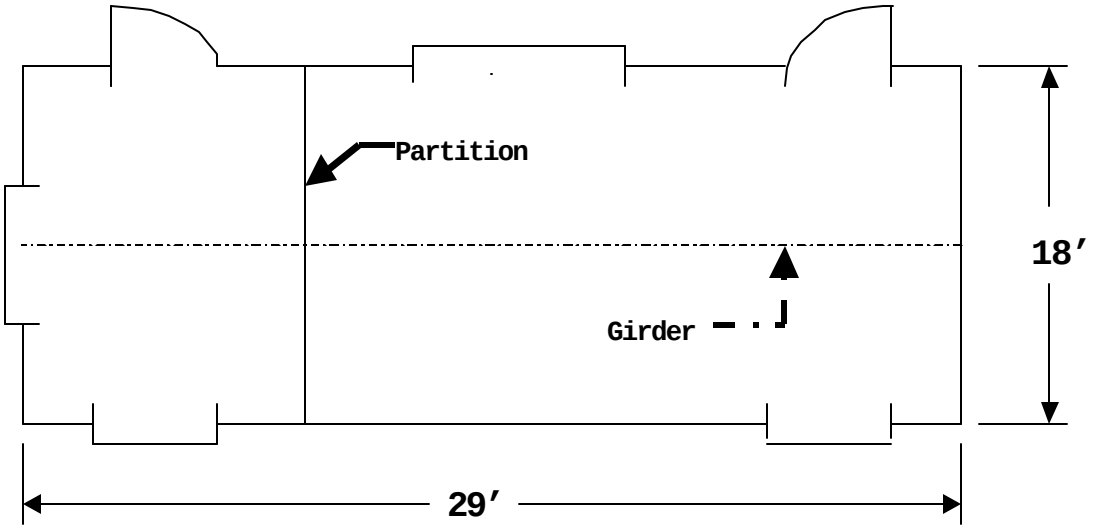

Foundation is a continuous "T" Wall

Laminated girder 2" x 8" (Laminated 3 times); located at the center of the building and supported by columns and piers every 10’

Sill board 2"x 8"

Floor Joist 2" x 8" at 2’ O/C with solid bridging; joist is plain lapped on top of the girder and sill

Floor Sheathing 3/4" plywood

Studs 2" x 4"; 2’ O/C

Standard 8’ walls; double top plate

Two exterior doors and four windows

One partition

Exterior sheathing 3/4" plywood

Interior finished with 1/2" Sheet Rock and sheet rock nails

Truss 2" x 4"; 24" O/C; only (1) center post

Roof pitch is 5/12 with a 1’4" overhang around entire Building with (2) false rafters

Roof sheathing 1/2" plywood

One Roll of roofing felt covers 500 SqFt/roll

Shingles take 4 bundles/square

No EOL's larger than 16' will be used

Show all formulas and calculations used.

Material Take Off Sheet

ITEM	# OF PCS.	SIZE LUMBER	TOTAL BDFT	REMARK
SILL				
GIRDER				
JOIST				
HEADER				
BRIDGING				
PLATES				
STUDS				
UPPER CHORD				
LOWER CHORD				
CENTER POST				
SUBFLOOR SHEATHING				
EXTERIOR WALL				
GABLE SHEATHING				
ROOF SHEATHING				
INTERIOR WALL				
SHEET ROCK NAILS				
FELT PAPER				
SHINGLES				
ROOFING NAILS				
8d NAILS				
16d NAILS				

1. Calculate material for sill.

2. Calculate material for girder.

3. Calculate material for joist to include trimmer joist.

4. Calculate material for headers.

5. Calculate material for bridging.

6. Calculate material for subfloor.

7. Calculate material for all plates.

8. Calculate material for all studs.

9. Calculate material needed for exterior wall sheathing.

10. Calculate material for exterior gable sheathing.

11. Calculate upper chord length.

12. Calculate # of trusses required.

13. Calculate material for the upper chord.

14. Calculate material for the lower chord.

15. Calculate material for the center post.

16. Calculate material for roof sheathing.

17. Calculate material needed to finish interior walls and ceiling, and nails.

18. Calculate for # rolls of roofing felt.

19. Calculate for total bundles of shingles.

20. Calculate # Lbs. of nails needed for:

    a. Roofing

b. Sheathing (8d)

c. Framing (16d)

REFERENCE(S):

1. FM 5-35, Engineer Reference and Logistical Data
2. FM 5-551, Carpentry
3. TM 5-704, Construction Print Reading in the Field

UNITED STATES MARINE CORPS
COMBAT ENGINEER INSTRUCTION COMPANY
MARINE CORPS ENGINEER SCHOOL
PSC BOX 20069
CAMP LEJEUNE, NORTH CAROLINA 28542-0069

C-23c07
01 Dec 00
(95 POI)

STUDENT HANDOUT

CONCRETE CONSTRUCTION

1. **Purpose:** This period of instruction is to provide you with the knowledge necessary to design and build concrete structures.

2. **Learning Objectives:**

a. Terminal Learning Objective(s):

(1) Provided a mission, construction site, specifications, engineer masonry tools, concrete mix personal, concrete mixer, a water source, specified mix ratio and reference, mix the concrete per the specification, per the reference (1371.1.6).

(2) Given specification, writing material and calculator, with the aid of reference, determine required concrete mixture that meets specifications per the reference (1371.1.7).

(3) Provided with a mission, construction site, specifications, engineer masonry tools, reinforcing material, mix concrete in forms per the reference (1371.8).

(4) Provided a mission to construct concrete forms, writing materials, and a calculator, with the aid of reference, construct/design concrete forms per the reference (1371.1.12).

b. Enabling Learning Objective(s):

(1) Provided a mission, and a list of cement types, without the aid of reference, select the correct cement type to meet specifications per the reference. (1371.1.7a).

(2) Provided a mission, a list of aggregate, and water source, without the aid of reference, select aggregate to meet specification per the reference (1371.1.7b).

(3) Provide a concrete construction mission, with the aid of reference, select the appropriate slump to meet specifications, per the reference (1371.1.7c).

(4) Provided a desired slump, slump cone, tamping rod, tape measure, and concrete sample, without the aid of reference, conduct a slump test per the reference (1371.1.7d).

(5) Provided a mission to construct a concrete structure, with the aid of reference select the appropriate air entrainment to meet specification per the reference (1371.1.7e).

(6) Provided a mission to construct concrete structure, with the aid of reference, determine the water content to meet specification per the reference (1371.1.7f).

(7) Provided with a mission to create a concrete structure, with the aid of reference select the appropriate water to cement ratio per the reference (1371.1.7g).

(8) Provided with a water content, water to cement ratio and calculator, with out the aid of reference, determine the amount of cement required for the mixture per the reference (1371.1.7h).

(9) Provided with a gravel volume, with the aid of reference determine the loose volume of gravel per the reference (1371.1.7i).

(10) Provided with the weigh of gravel, water cement contents, and a calculator, without the aid of reference, convert the materials to their absolute volumes per the reference (1371.1.7j).

(11) Provided with the bulk unit weight of sand, the specifications, and calculator, without the aid of reference, determine the loose volume of sand per the reference (1371.1.7k).

(12) Provided with a sample of aggregate, and a calculator with the aid of reference, conduct a field moisture test per the reference (1371.1.7l).

(13) Provided with an aggregate volume, moisture content, and a calculator, without the aid of reference, adjust the mix proportions to compensate for the moisture content per the reference (1371.1.7m).

(14) Provided with sand, the specifications and a calculator, without the aid of reference, determine the weight of the material per the reference (1371.1.7n).

(15) Provided construction drawings of a concrete forms, without the aid of reference, identify the parts of the form per the reference (1371.1.12a).

(16) Provided a mission to create a concrete structure, calculator, with the aid of reference, determine a rate of placement per the reference (1371.1.12b).

(17) Provided a rate of placement, concrete temperature, and calculator with the aid of reference, determine the hydrostatic fluid pressure per the reference (1371.1.12c).

(18) Provided a hydrostatic fluid pressure with the aid of reference, determine stud spacing for the project per the reference (1371.1.12d).

(19) Provided a hydrostatic fluid pressure with the aid of reference, determine wale spacing per the reference (1371.1.12e).

(20) Provided a tie wire size, hydrostatic fluid pressure with the aid of reference, determine tie wire spacing per the reference (1371.1.12f).

(21) Provided a rate of placement concrete temperature, and specifications, and a calculator with the aid of reference, adjust the rate of placement per the reference (1371.1.12g).

OUTLINE

1. **CONCRETE MIX PROPORTIONS**

a. COMPONENTS OF CONCRETE. Concrete is a mixture of aggregate, and often-controlled amounts of entrained air, held together by a hardened paste made from cement and water.

b. DESIRABLE PROPERTIES OF CONCRETE.

(1) Plastic Concrete. This is concrete in a relatively fluid state, which is readily molded by hand, like a clump of molding clay.

(a) Workability - This property describes the relative ease or difficulty of placing and consolidating concrete in the form.

(b) Homogeneity - Plastic concrete must be carefully handled to keep segregation to a minimum.

(c) Uniformity - The uniformity of plastic concrete affects both its economy and strength. Each separate batch of concrete must be proportioned and mixed exactly the same to insure that the total structural mass has uniform structural properties.

(2) Hardened Concrete. This is the end product of any concrete design that has completed hydration.

(a) Strength - The ability of concrete to resist a load in compression, flexure, or shear is a measure of its strength.

(b) Durability - Concrete's ability to resist the effects of wind, frost, snow, ice, and abrasion is a measure of its durability.

(c) Water tightness - Tests show that the water tightness of a cement paste depends on the water cement ratio.

c. PORTLAND CEMENT. Portland cements contain lime and clay minerals (such as limestone, oyster shells, moral, clay, and shale), silica sand, iron ore, and aluminum.

(1)

Standard Types	**Design**	**Strength at**
Type I	Normal	28 days
Type II	Modified	45 days
Type III	High-Early	7 days
Type IV	Low Heat	90 days
Type V	Sulfate Resistant	60 days

(2) Properties

Weight/Sack - 94 Lbs/sack
Volume/Sack - 1 cubic foot/sack
Specific Gravity - 3.15 (constant)

NOTE: Specific Gravity - The ratio of aggregate weight to the weight of an equal volume of water, or Specific Gravity compares the density of a mineral to the density of water.

d. WATER - Water has two functions in the concrete mix-to effect hydration and to improve workability.

(1) Water should be free of organic, oils, acids, and alkalis.

(2) Salt Water reduces the strength 10-20% and should not be used in reinforced concrete.

NOTE: DRINKABLE-WATER IS THE BEST WATER USED FOR CONCRETE CONSTRUCTION.

(3) The amount of water used in concrete ranges from 4 minimum to 7 gallons maximum per sack. 2 1/2 gallons for hydration and 1 1/2 to 4 1/2 gallons for workability.

(4) Weight - 8.33 Lbs per gallon

62.40 Lbs. per cubic foot

7.50 gallons per cubic foot

(5) Rule of thumb for ordering water is 8 gal. per sack of cement.

(6) Specific Gravity of water is 1.0

e. WATER/CEMENT RATIO (W/C). The strength, durability, and water tightness requirements of the hardened concrete determine the water cement ratio.

(1) Expressed as a decimal: mathematical relationship between the Weight of Water per unit volume of concrete and the Weight of Cement per unit volume of concrete.

Example: **W/C of .50 =** $\frac{\textbf{300 Lbs of water per cubic yard of concrete}}{\textbf{600 Lbs of cement per cubic yard of concrete}}$

(2) Expressed in gallons of water per sack of cement:

Example: 5.6 gallons of water/sack of cement Note: This is equal to a W/C ratio of 0.49

$$\frac{\textbf{5.6 x 8.33 Lbs/gal}}{\textbf{94 Lbs/sack}} = \underline{\textbf{.496}}$$

f. AGGREGATES. Aggregates make up from 60 to 80 percent of concrete volume. Their characteristics influence the mix proportions and economy of the concrete considerably.

(1) Purpose.

(a) Reduce Shrinkage Cracks

(b) Economy

(2) Desirable Characteristics.

(a) Strong

(b) Durable

(c) Clean

(d) Bulky

(e) Well graded

(3) Specific Properties

(a) Fine Aggregate (Sand)

1 Gradation: Must pass a #4 sieve, retained on #200 sieve.

2 Fineness Modules - An index to the relative fineness or coarseness of fine aggregate with typical values ranging from 2.3 to 3.1.

3 Maximum Allowable Fines - (percent by weight of material finer than a No. 200 sieve.)

a Abrasive Structure $\leq$ 3%

b Non Abrasive Structure $\leq$ 5%

(b) Coarse Aggregate (Gravel)

1 Gradation: Passes 3-inch sieve, retained on #4 sieve.

2 Maximum Allowable fines $\leq$ 1%

3 Maximum Size Aggregate (MSA). Choose the smallest course aggregate answer using the following formulas:

a MSA = $\leq$ 1/5 (or.20) of the WALL thickness.

b MSA = $\leq$ 1/3 (or.33) of the SLAB thickness.

c MSA = $\leq$ 3/4 (or.75) of the MINIMUM CLEAR SPACE (MCS).

d MSA for the type of mixing equipment; FOR THE 11-S MIXER = 3" OR LESS)

e ** Select the smallest of the four rules from above.

(c) Bulk Unit Weight. The weight of the aggregate that fills a 1 cubic foot container.

(d) Specific Gravity. The average specific gravity for normal-weight aggregates is 2.6.

(e) Moisture Conditions. Bulking is the increase in volume caused by surface moisture holding the particles apart. Too much moisture on the aggregate surfaces also adds to the concrete mixing water. The amount can be considerable, especially the excess water in fine aggregate.

g. **AIR ENTRAINMENT**. An admixture that produces air bubbles in the concrete mixture.

(1) Advantages - Increases Durability, Workability and Water tightness

(2) Disadvantages - Decreases Strength (.05% for every .01% air)

(3) Methods

(a) Air entraining cement

(b) Chemical Admixtures

h. **Demonstration/Practical Application**: Obtain the preliminary proportions for a one cubic yard concrete mix to be used in a reinforced concrete retaining wall. It will be constructed at Camp Lejeune, NC. The climate is moderate. An 11-S Mixer is available. (The next page is a sketch for your project).

SPECIFICATIONS
Strength @ 28 days - 3,000 psi
Cement Types Available - I, IA, III
Water available from a potable source

Fine Aggregate:	F.M.	S.G.	B.U.W.	%FINES
Source A	2.50	2.65	120 Lbs/cf	4
Source B	2.95	2.60	125 Lbs/cf	6

Course Aggregate:	TYPE	MSA	S.G.	B.U.W	%FINES
Source A	Gravel	2"(-)	2.85	110 Lbs/cf	0.5
Source B	Gravel	1"(-)	2.69	95 Lbs/cf	1.0
Source C	Gravel	.5"(-)	2.70	103 Lbs/cf	1.3

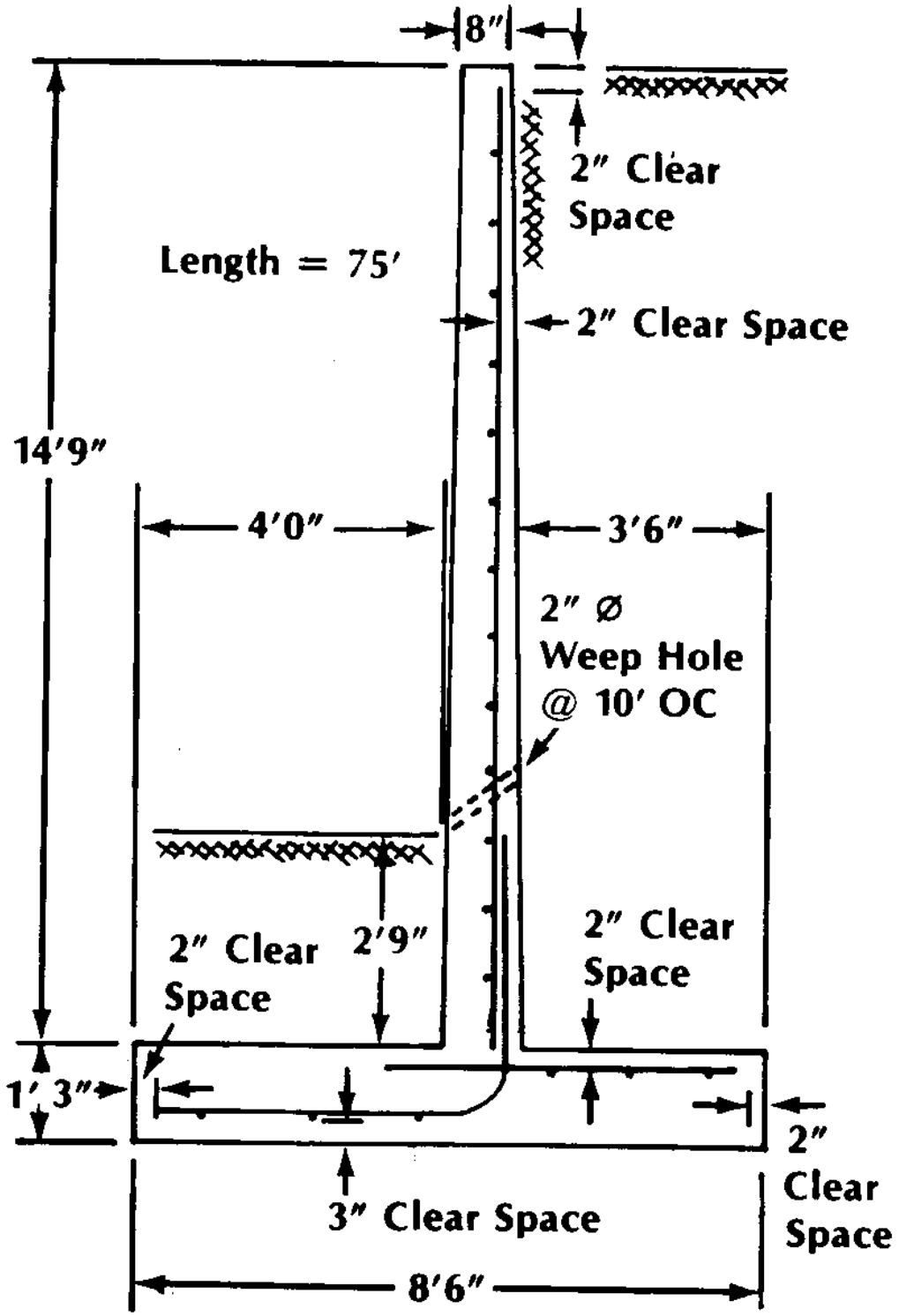
8″
2″ Clear Space
Length = 75′
2″ Clear Space
14′9″
4′0″
3′6″
2″ Ø Weep Hole @ 10′ OC
2′9″
2″ Clear Space
2″ Clear Space
1′3″
2″ Clear Space
3″ Clear Space
8′6″

PROCEDURE

(l) Select Cement Type:

Availability: I, IA, III TYPE:_____**(ANSWER)**

(2) Select An Aggregate Source:

(a) Fine Aggregate

1 Source _____**(ANSWER)**

2 Fineness Modules (FM) _____**(ANSWER)**

3 Specific Gravity (SG) _____**(ANSWER)**

4 Bulk Unit Weight (BUW) _____**(ANSWER)**

5 Percent Fines _____**(ANSWER)**

(b) Coarse Aggregate

1 Maximum Allowable fines $\leq$ 1%

2 Maximum Size Aggregate allowable for the project:

1/5 x Thickness of Wall: 1/5 x _____ = _____**(ANSWER)**

1/3 x Thickness of Slab: 1/3 x _____ = _____**(ANSWER)**

3/4 x Min. clear space: 3/4 x _____ = _____**(ANSWER)**

MSA for mixing equipment: = _____**(ANSWER)**

MSA for the Project (Smallest of above) = _____(**ANSWER)**

3 Chosen Course Aggregate

Source _____**(ANSWER)**

Type _____**(ANSWER)**

Max. size aggregate (MSA) _____**(ANSWER)**

Specific Gravity (SG) _____**(ANSWER)**

Bulk Unit Weight (BUW) _____**(ANSWER)**

Percent Fines _____**(ANSWER)**

(3) Select Water/Cement Ratio:

(a) Durability/Watertightness **(Pg. 3-2, Table 3-1)** =_____(**ANSWER**)

Exposure Condition	Normal-Weight Concrete (Absolute W/C Ratio by Weight)
Concrete protected from exposure to freezing and thawing or the application of deicer chemicals	Select a W/C ratio on the basis of strength, workability, and finishing needs
Watertight concrete* • In freshwater • In seawater	 0.50 0.45
Frost-resistant concrete* • Thin sections; any section with less than a 2-inch cover over reinforcement and any concrete exposed to deicing salts • All other structures ← — — — — — — — — →	 0.45 0.50
Exposure to sulfates* • Moderate • Severe	 0.50 0.45
Concrete placed underwater	Do not use less than 650 pounds of cement per cubic yard (386 kg/m^3).
Floors on grade	Select W/C ratio for strength, plus minimum cement requirements described in Table 3-7.

* For the properties of watertight concrete, frost-resistant concrete and exposure to sulfates, use designing strength for air-entrained concrete.

(b) Strength (**Pg.3-2, Table 3-2**) = _____(**ANSWER**)

Table 3-2. Maximum permissible W/C ratios for concrete

Specified Compressive Strength, in psi*	Maximum Absolute Permissible W/C Ratios by Water	
	Nonair-Entrained Concrete	Air-Entrained Concrete
2,500	0.67	0.54
3,000	0.58	0.46
3,500	0.51	0.40
4,000	0.44	0.35
4,500	0.38	**
5,000	**	**

NOTE: 1,000 psi = 7 MPa.

***28-day strength. The W/C ratios will provide average strengths that are greater than the specified strengths.**

****For strength above 4,500 psi (nonair-entrained concrete) and 4,000 psi (air-entrained concrete), proportions should be established by the trial-batch method.**

(c) Choose the lowest of the above; W/C Ratio = _____(**ANSWER**)

(4) Select Design Slump (**Pg. 3-5, Table 3-4**):

Table 3-4. Slumps for various types of construction (with vibration)

Concrete Construction	Slump, in Inches	
	Maximum*	Minimum*
Reinforced foundation walls and footings	3	1
Plain footing, caissons, and substructure walls	3	1
Beams and reinforced walls	4	1
Building columns	4	1
Pavements and slabs	3	1
Mass concrete	2	1

NOTE: 1 inch = 25 mm

***May be increased 1 inch for consolidation by methods such as rods and spades.**

(a) Slump = _____**(ANSWER)**

(b) Slump testing determines the cement concrete consistency.

1 Dampen the mold and place it on a flat surface.

2 Fill the mold with three equal layers of concrete.

3 Tamp each layer 25 strokes with the tamping rod, penetrating the previous layer only 1″.

4 Strike off the excess concrete from the top of the mold.

5 Lift the mold from the concrete and place it beside the specimen.

6 Place the tamping rod across the top of the mold and measure the distance between the bottom of the rod and the top surface of the specimen.

7 Test 3 times a day as specs dictate; Acceptance of ±1 inch.

(5) Select Water Content and Percent Air: **(Pg. 3-4,Table 3-3)**

Maximum Aggregate Size: _____	3/8 Inch	1/2 Inch	3/4 Inch	1 Inch	1 1/2 Inches	2** Inches	3** Inches	6** Inches
Water in Pounds Per Cubic Yard of Concrete*								
Slump, in Inches	Nonair-Entrained Concrete							
1 to 2	350	335	315	300	275	260	240	210
3 to 4	385	365	340	325	300	285	285	230
6 to 7	410	385	360	340	315	300	285	
	Air-Entrained Concrete							
1 to 2	305	295	280	270	250	240	225	200
3 to 4	340	325	305	295	275	265	250	220
6 to 7	365	345	325	310	290	280	270	-
Approximate percentage amount of entrapped air in nonair-entrained concrete								
	3	2.5	2	1.5	1	0.5	0.3	0.2
Recommended percentage average and total air content for air-entrained concrete								
Anticipated Usage								
Mild exposure	4.5	4.0	3.5	3.0	2.5	2.0	1.5	1.0
Moderate exposure	6.0	5.5	5.0	4.5	4.5	4.0	3.5	3.0
Severe exposure	7.5	7.0	6.0	6.0	5.5	5.0	4.5	4.0

*These quantities of mixing water are for use in computing cement factors for trial batches. They are maximums for reasonably well-shaped, angular CA graded within limits of accepted specifications.

**The slump values for concrete containing aggregate larger than 1 1/2 inches are based on slump tests made after removal of particles larger than 1 1/2 inches by wet screening.

(a) Water Content = _____Lbs/cuyd **(ANSWER)**

(b) Percent Air = _____ (**ANSWER)**

(6) Calculate Cement Content:

Cement = Water (Lbs/cu yd)
W/C ratio

_____Lbs H2O ¸ _____W/C ratio =_____Lbs/cuyd (**ANSWER)**

(7) Calculate Gravel Content: **(Pg. 3-10, Table 3-6)**

Table 3-6. Volume of CA per cubic yard of concrete

Maximum Size of Aggregate, in Inches	Fineness Modulus of FA			
	2.40	2.60	2.80	3.00
	CA, in Cubic Feet Per Cubic Yard			
3/8	13.5	13.0	12.4	11.9
1/2	15.9	15.4	14.8	14.3
3/4	17.8	17.3	16.7	16.2
1	19.2	18.6	18.1	17.6
1 1/2	20.2	19.7	19.2	18.6
2	21.1	20.5	20.0	19.4
3	22.1	21.6	21.1	20.5

NOTE: Volumes are based on aggregates in a dry-rodded condition, as described in Method of Test for Unit Weight of Aggregate (ASTM C29). These volumes are selected from empirical relationships to produce concrete with a degree of workability suitable for usual reinforced construction. For less workable concrete, such as that required for concrete pavement construction, the volume may be increased about 10 percent. When placement is to be by pump, volume should be decreased about 10 percent.

(a) Loose Volume of Gravel = _____cf/cuyd **(ANSWER)**

(b) Weight of Gravel = **(BUW x Loose Volume)**

_____ x _____ = _____Lbs/cuyd (**ANSWER)**

(8) Calculate Sand Content:

(a) Convert the Cement, Water, Air and Gravel Contents to Absolute Volumes.

Cement = (Lbs of cement)
(3.15 x 62.4)

(_____**)** ¸ **(**_____**)** = _____cf/cy **(ANSWER)**

Water = (Lbs of water)

(1.0 x 62.4)

(_____) ¸ (_____ _____) = _____ _____cf/cy **(ANSWER)**

Gravel = (Lbs of gravel)
(S.G. x 62.4)

(_____) ¸ (_____ _____) = _____cf/cy **(ANSWER)**

Air = (Percent Air) x 27 cf/cy

(_____) x 27 = _____cf/cy **(ANSWER)**

Partial Volume (PV):

Add all the total absolute volumes = _____cf/cy **(ANSWER)**

(b) Absolute Volume of Sand:

27 cuft/yd – (PV) = AbsVol of sand:

27 – (_____) = _____Abs.Vol of sand **(ANSWER**)

(c) Weight of Sand = **AbsVol of sand x SG.of sand x 62.4**

_____ x _____ x 62.4 = _____Lbs of sand **(ANSWER)**

(d) Loose Volume Sand = **Weight of Sand ¸ BUW SAND**

_____ ¸ _____ **=** _____ cf/cy **(ANSWER)**

(9) Preliminary Mix Proportions for a one cubic yard:

SUMMARY

Cement = _____ Lbs/cy ÷ 94 = _____Sacks/cy

Water = _____ Lbs/cy ÷ 8.33 = _____Gallons/cy

Sand = _____ Lbs/cy ÷ _____BUW = _____cf/cy

Gravel = _____ Lbs/cy ÷ _____BUW = _____cf/cy

Air = _____ %

Slump = _____ Inches

NOTE: THESE PROPORTIONS ASSUME A SATURATED SURFACE DRY (SSD) MOISTURE CONDITION FOR THE AGGREGATES. ADJUSTMENTS MUST BE MADE FOR THE ACTUAL MOISTURE CONDITIONS ON THE JOB SITE.

2. **CONCRETE MIXING EQUIPMENT**

a. Concrete Mixing Equipment Available at the Company Level.

b. 11S MODEL MIXER

(1) 11 cf capacity per batch.

(2) Charging time takes 2 1/2 minutes.

(3) Drum rotation speed is 17 RPM when charged.

(4) Mixing time is 1 1/2 minutes after all materials and water is in the drum.

(5) Discharge time is 1 minute.

c. Batching proportions for the 11S Mixer. The procedure for calculating each ingredient for batching the mixer to maximize the uniformity is as follows:

<u>NOTE</u>: Use the answers for the summary of the Preliminary Mix Proportion for a one cubic yard from lesson 1:

(1) Convert all the ingredients into volume/cubic feet:

Cement: _____ sacks/cy ÷ 1 cf per sack = _____ cf/cy

Water: _____ gallons/cy ¸ 7.5 = _____ cf/cy

Sand = _____ cf/cy

Gravel + _____ cf/cy

Add all the ingredients above = _____ Total cf **(ANSWER)**

<u>NOTE</u>: Since the total cubic feet for this particular batch equals <u>39.68</u> we will use this number to equate the rest of the procedure.

(2) Proportion the cement:

[(cf cement ¸ total cf) x 11 cu/ft] = total cement cu/ft per batch

(_____ ¸ _____) x 11 cu/ft = _____cf/batch **(ANSWER)**

(3) Proportion the water:

[(Cf water ¸ total cf) x 11 cu/ft] x 7.5 = gallons of water per batch

(_____ ¸ _____) x 11 cu/ft x 7.5 = _____gal/batch **(ANSWER)**

(4) Proportion the sand:

(cf sand ¸ total cf) x 11 cu/ft = total sand cu/ft per batch

(_____ ¸ _____) x 11 cu/ft = _____ cu/ft per batch **(ANSWER)**

(5) Proportion the gravel:

(cf gravel ¸ total cf) x 11 cu/ft = total gravel cu/ft per batch

(_____ ¸ _____) x 11 cu/ft =_____cu/ft per batch **(ANSWER)**

SUMMARY

Cement Per Mixer Batch = _____ cf/sacks

Water Per Mixer Batch = _____ gallons

Sand Per Mixer Batch = _____ cf

Gravel Per Mixer Batch = _____ cf

d. Free Surface Moisture.

(1) Prior to mixing check for Free Surface Moisture (FSM) (Appendix B pg. B-1 of FM5-742)

(2) Determine the total amount of water on fine aggregates by performing the field test (appendix B). Determine the amount of water on the coarse aggregates by observation. Coarse aggregate will only hold 1 percent of water.

(3) Free Surface Moisture (FSM) - Fine aggregates have a tendency to bulk (expand in volume) when wet. This factor becomes very important if the concrete is being batched at a mixer by volume; **the initial mix design must be adjusted in order to maintain the water:cement ratio the**

concrete mix called for.

EXAMPLE PROBLEM: The materials are on site, and you are now ready to start mixing operations. But, first you must check your aggregates for free surface moisture. You're informed that you have **4% moisture on your fine aggregate and 1% moisture on your course aggregate**. Adjust the mix proportions **for (1) one mixer batch** due to the FSM on the aggregates.

Cement Per Mixer Batch: 1.89 cf/sacks x _____ = _____Lbs.

Water Per Mixer Batch: 9.81 gallons x _____ = _____Lbs

Sand Per Mixer Batch: 2.56 cf x _____ = _____Lbs

Gravel Per Mixer Batch: 5.23 cf x _____ = _____Lbs

Procedure

(a) Calculate the amount of FSM

Sand: .04 FSM x _____ Lbs/batch of sand = _____

Gravel: .01 FSM X _____ Lbs/batch of gravel = + _____

= _____Lbs. of FSM

(b) Decrease the mixing water due to FSM.

_____Lbs. of water/mixer batch

- _____ Lbs. of total FSM in aggregrates

= _____ Lbs. of adjusted water/mixer batch

(c) Adjust the aggregates by volume using the bulking factor (BF) obtained from figure 3-4 on page 3-13.

[Cubic Feet of sand per Mixer Batch x (1 + Bulking Factor)] = Vwet
or
[Vdry x (1 + Bulk Factor)] = Vwet

Sand: [_____ x (1 + _____)] = _____ cf/mixer batch (**ANSWER**)

Gravel: [_____ x (1 + _____)]= _____ cf/mixer batch (**ANSWER**)

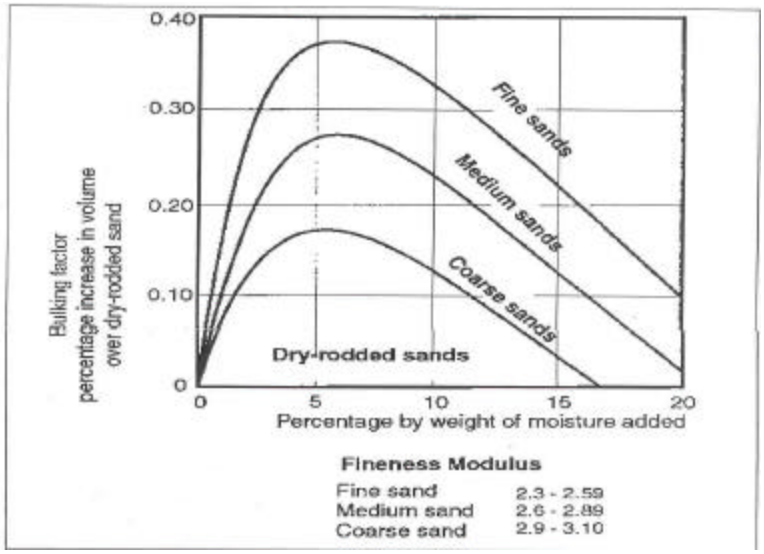

(d) Adjusted Mix Design for one (1) mixer batch due to FSM.

Cement _____ Sacks **(ANSWER)** Sand _____ cf/cy **(ANSWER)**

Water _____ Lbs. **(ANSWER)** Gravel _____ cf/cy **(ANSWER)**

Slump _____ **(ANSWER)**

3. **CONCRETE FORMWORK**

a. Forces on Formwork.

(1) Hydrostatic Fluid Pressure - The basis of form design is to offset the maximum pressure developed by the concrete during placing. The amount of pressure depends on the rate of placing and the ambient temperature of the plastic concrete. Knowing these two factors (rate of placement and ambient temperature) plus the specified type of form material, you can calculate a tentative design. The following formula will help you determine the maximum concrete pressure that will be exerted on the form you are to design:

P max = 150 + [(9000 x R) ¸ T] **Note: T = °f and for R < 7 ft/hr**

(2) Rate of placement (R) – The speed of placing the concrete mix into the formwork expressed in feet per hour.

(a) For an economical form design, the recommended placement rate **should not exceed 5 feet per hour**.

(b) There are two stipulations: P max cannot exceed 2000 psf for wall forms and 3,000 psf for column forms.

(3) **EXAMPLE PROBLEM**: Determine the PMax for the concrete retaining wall in Student Handout page 6. An 11-S Mixer will be used. It can produce 1 cy of concrete every 12 min. The concrete temperature is estimated to be **70 degrees Fahrenheit**.

PROCEDURE

(a) Mixer Output:

(Mixer Capacity x 60 min/hr x # of Mixers) ¸ Batch Cycle = Mixer Output

NOTE: BATCHING CYCLE WILL VARY, DEPENDING ON THE SPEED OF THE CREW; WE ARE USING AN EXPERIENCE CREW.

(_____ cf x 60 min/hr x_____) ¸ **5 minutes** = _____ cf/hr

(b) Plan Area: **Length (ft) x width (ft) = Plan Area in Sq.Ft.**

1 FOR TRAPEZOID SHAPE WALLS USE THE FOLLOWING FORMULA FOR THE AVERAGE WIDTH OF THE WALL:

(Top + Bottom) ¸ 2 = Average width of wall

Example (.66' + 1') ¸ 2 = .$\overline{83}$

2 Find the Square Footage of the plan area

_____(length) x _____(width) = _____ sf

(c) Rate of placement (R): **Mixer Output ¸ Plan Area = Rate in ft/hr**

_____cf/hr ¸ _____sf = _____ ft/hr **(ANSWER)**

(d) Time required to place concrete.

(Height of form ¸ Rate of placement) = Time Required to Pour

_____ ÷ _____ = _____ Hours

(e) Estimated Concrete Pressure: Use the formula for an accurate answer.

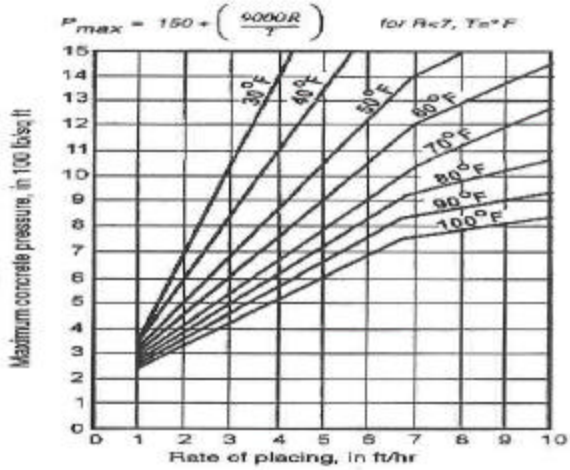

OR

Concrete Pressure: P max = 150 + [(9000 x R) ¸ T]

[(9000 x _____ ft/hr) ¸ _____°] + 150 = _____ Lbs/sf

b. Wall Form Design.

(1) Select Materials and Grain Direction:

Sheathing	-	3/4" plywood/strongway
Studs	-	2" x 4" lumber; single member
Wales	-	2" x 4" lumber; double member
Ties	-	#8 Gage Wire

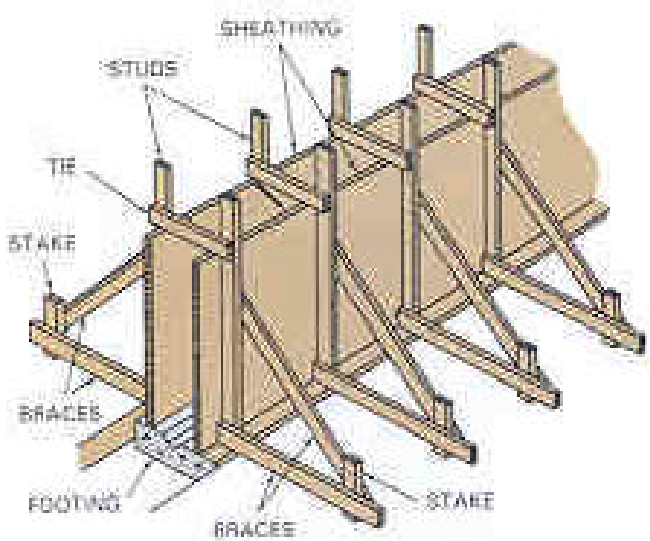

(2) Maximum Stud Spacing.

NOTE: When using charts on table, always round up the Pmax answer to next larger number.

Stud Spacing = _____inches O/C

Table 4-2

Table 4-1. Maximum stud (joist) spacing for board sheathing

Maximum Concrete Pressure, in Pounds per Square Foot	Nominal Thickness of S4S Boards, in Inches			
	1	1 1/4	1 1/2	2
75	30	37	44	50
100	28	34	41	47
125	26	33	39	44
150	25	31	37	42
175	24	30	35	41
200	23	29	34	39
300	21	26	31	35
400	18	24	29	33
500	16	22	27	31
600	15	20	25	30
700	14	18	23	28
800	13	17	22	26
900	12	16	20	24
1,000	12	15	19	23
1,100	11	15	18	22
1,200	11	14	18	22
1,400	10	13	16	20
1,600	9	12	15	18
1,800	9	12	14	17
2,000	8	11	14	16
2,200	8	10	13	16
2,400	7	10	12	15
2,600	7	10	12	14
2,800	7	9	12	14
3,000	7	9	11	13

Maximum Concrete Pressure, in Pounds per Square Foot	Strong Way - 5-Ply Sanded Face, Grain Perpendicular to the Stud				Weak Way - 5-Ply Sanded Face, Grain Parallel to the Stud			
	1/2	5/8	3/4	1 (7 ply)	1/2	5/8	3/4	1 (7 ply)
75	20	24	26	31	13	18	23	30
100	18	22	24	29	12	17	22	28
125	17	20	23	28	11	15	20	27
150	16	19	22	27	11	15	19	25
175	15	18	21	26	10	14	18	24
200	15	17	20	25	10	13	17	24
300	13	15	17	22	8	12	15	21
400	12	14	16	20	8	11	14	19
500	11	13	15	19	7	10	13	18
600	10	12	14	17	6	9	12	17
700	10	11	13	16	6	9	11	16
800	9	10	12	15	5	8	11	15
900	9	10	11	14	4	8	9	15
1,000	8	9	10	13	4	7	9	14
1,100	7	9	10	12	4	6	8	12
1,200	7	8	10	11	-	6	7	11
1,300	6	8	9	11	-	5	7	11
1,400	6	7	9	10	-	5	6	10
1,500	5	7	9	9	-	5	6	9
1,600	5	6	8	9	-	4	5	9
1,700	5	6	8	8	-	4	5	8
1,800	4	6	8	8	-	4	5	8
1,900	4	5	8	7	-	4	4	7
2,000	4	5	7	7	-	-	4	7
2,200	4	5	6	6			4	6
2,400	-	4	5	6			4	6
2,600	-	4	5	5			-	5
2,800	-	4	4	5			-	5

(8) Uniform Load on the Stud **(ULS):**

[Concrete Pressure x Stud Spacing (in inches)] ¸ 12 in/ft = ULS

[_____Lbs/ft x _____inches] ¸ 12in/ft = _____ Lbs/Lf **(ANSWER)**

(9) Maximum Wale Spacing **(Page 4-7, Table 4-3 or Table 4-4):**

NOTE: When using charts on table, **always round up the ULS answer** to the next larger number on the chart.

Pressure on 2″x 4″material = _____ Lbs/Lf

Wale Spacing = _____ inches O/C

Table 4-3. Maximum spacing, in inches, for whales, ties, stringers, and 4" x 4 or larger shore where member to be supported is a SINGLE member

Uniform Load in Pounds per Linear Foot	Supported Members Size (S4S)*				
	2 x 4	2 x 6	3 x 6	4 x 4	4 x 6
100	60	95	120	92	131
125	54	85	440	80	124
150	49	77	100	75	118
175	45	72	93	70	110
200	42	67	87	65	102
225	40	62	82	61	97
250	38	60	77	58	92
275	36	57	74	55	87
300	35	55	71	53	84
350	32	50	65	49	77
400	30	47	61	46	72
450	28	44	58	43	68
500	27	41	55	41	65
600	24	38	50	37	59
700	22	36	46	35	55
800	21	33	43	32	51
900	20	31	41	30	48
1,000	19	30	38	29	46
1,200	17	27	35	27	42
1,400	16	25	33	25	39
1,600	15	23	31	23	36
1,800	14	22	29	22	34
2,000	13	21	27	21	32
2,200	13	20	26	20	31
2,400	12	19	25	19	30
2,600	12	19	24	18	28
2,800	11	18	23	17	27
3,000	11	17	22	17	26
3,400	10	16	21	16	25
3,800	10	15	20	15	23
4,500	9	14	18	13	21

*S4S indicates surfaced four sides.

Table 4-4. Maximum spacing, in inches, for ties and 4" x 4" or larger shores where member to be supported is a double member

Uniform Load, in Pounds per Linear Foot	Supporting Member Size (S4S)				
	2 x 4	2 x 6	3 x 6	4 x 4	4 x 6
100	85	126	143	222	156
125	76	119	135	105	147
150	70	110	129	100	141
175	64	102	124	96	135
200	60	95	120	92	131
225	57	89	116	87	127
250	54	85	109	82	124
275	51	84	104	78	121
300	49	77	100	75	118
350	46	72	93	70	110
400	43	67	87	65	102
450	40	63	82	61	97
500	38	60	77	58	92
600	35	55	71	53	81
700	32	51	65	49	77
800	30	47	61	46	72
900	28	44	58	43	68
1,000	27	43	55	41	65
1,200	25	39	50	38	59
1,400	23	36	46	35	55
1,600	21	34	43	33	51
1,800	20	32	41	31	48
2,000	19	30	39	29	46
2,200	18	29	37	28	44
2,400	17	27	36	27	42
2,600	17	26	34	26	40
2,800	16	25	33	25	39
3,000	15	24	32	24	38
3,400	14	23	30	22	35
3,800	14	21	28	21	33
4,500	12	20	25	19	30

(10) Uniform Load on the Wale **(ULW):**

[Concrete Pressure x Wale Spacing(in)] ¸ 12 in/ft = ULW

[_____ ___ Lbs/ft x _____ _____ inches] ¸ 12in/ft =_____Lbs/Lf **(ANSWER)**

(11) Tie Spacing based on ULW **(Page 4-7, Table 4-3 or 4-4):**

NOTE: When using charts on table, **always round up the ULW answer** to next larger number on the chart.

Pressure on Wale = _____ Lbs/Lf (ULS rounded up)

Tie Spacing = _____ inches O/C

(12) Tie Spacing based on the strength of tie **(Page 4-8, Table 4-5):**

Table 4-5. Average breaking load of tie material, in pounds

Steel Wire	
Size of Wire Gage Number	**Minimum Breaking Load Double Strand, in Pounds**
8	1,700
9	1,420
10	1,170
11	930
Barbwire	
Size of Wire Gage Number	**Minimum Breaking Load**
12 1/2	950
13*	660
13 1/2	950
14	650
15 1/2	850
Tie-rod	
Description	**Minimum Breaking Load, in Pounds**
Snap ties	3,000
Pencil roads	3,000
***Single-strand barbwire**	

[Tie Strength x 12 in/ft] ÷ ULW = Tie Spacing (TS)

[_____ x 12in/ft] ÷ _____Lbs/Lf =_____**(rd. down)** =_____inches

(13) Maximum Tie Spacing:

(Pick the smaller between tie spacing due to ULW or wire breaking strength) = _____inches

(14) Adjusted Tie/Stud Spacing (Wire Ties Only):

Maximum Tie Spacing = _____ inches

Stud Spacing = _____ inches

Select the smaller of the two = _____inches

(15) Procedure to determine area of wall structure for sheathing:

(a) Area of walls = (Length x Height) x 2 sides

Walls: _____ft x _____ft x 2 sides = _____ SF

(b) Area of end walls = (Height x Width) x 2 ends

Ends = _____ft x _____ft x 2 ends = _____ SF

(c) Sheets of plywood = (Add total area of both walls)÷ 32 sf/sht

_____sf of walls

+ _____sf of end walls

_____Total sf ÷ 32 = _____ x 1.2 Waste factor = _____Sheets
(Round up whole #)

(16) Required number of studs per side:

[(Lgt of form x 12in/ft) ¸ Stud Spacing] + 1 = # of studs (Round Up)

[(_____ft x 12in/ft) ¸ _____inches] + 1 = ____ ↑ ____studs per side

Note: The spacing between the last two studs may be <u>less</u> than the maximum allowable spacing.

(17) Procedure to determine material for studs:

(a) Calculate studs both sides;

_____ Studs/(1) Side x 2 Sides = _____Studs for both side walls

(b) Calculate studs for ends;

_____ Studs/(1) End X 2 Ends = _____Studs for both end walls

(c) Total studs = _____ + _____ = _____
(sides) (ends) (Total Studs)

(d) Determine the best EOL and the number of pieces required:

(Total studs ÷ # of studs/EOL = # of pieces required) x 1.1 waste factor

(_____ ÷ _____) x 1.1 = _____Total # of EOL needed

(e) Total bdft: (_____ x ____ x ____ x _____)÷ 12 = _____bdft
Qty Thick Width Length

(18) Required number of Wales per side:

(Height of form x 12in/ft) ¸ Wale spacing = Number of Wales(Round up)

(_____ft x 12in/ft) ¸ _____inches = _____ ____ Wales per side

(19) Procedure to determine material for wales:

(a) Calculate material in Linear Feet for the length of wales;

(b) Determine the length of the wale for the wall

NOTE 1: The wales go beyond the actual wall length to make the form.

[(Width of two 2^2 x 4^2 is 7 inches + $.75^2$ thickness of plywood) x 2 for both ends] = 15.5 inches ¸ 12 (to convert to feet) = 1.29 feet (Add to the actual length of the wall)

_____LF x _____ Wales/Side x 2 Sides x 2 (Doubled) = _____LF(Round up to the next whole number)

(c) Calculate the wale length for the width of the end wall;

NOTE 2: Same as note 1, but add the thickness of the walls vice the length of the wall.

Wale extends 15.5^2 + 10^2 (Average thickness of end wall) = 25.5 inches ¸ 12" per foot
2.125'

2.125 LF/Wale x 8 Wales/End x 2 Sides x 2 Ends(Doubled) = _____LF(Round up to next whole number)

(d) Total Material: _____LF(Walls) + _____LF(Ends) = _____
Total LF

(e) Determine the best EOL and the number of pieces required:

(Total Lnft ÷ best EOL = # of pieces required) x 1.1 waste factor

(_____ ÷ _____) x 1.1 = _____Total # of EOL needed

(f) Total bdft:(_____ x ____ x ____ x _____) ÷ 12 = _____bdft

(20) Procedure to determine for ties:

(a) Use wire ties at every stud-wale intersection.

NOTE: Intersection is every time a stud comes in contact with a wale.

_____ Studs(1)Side x _____ Wales/Side = _____ Total Intersections

(b) Calculate length of wire tie (inches).

NOTE: See length of wale for width of end wall

Wale length on end wall: 25.5" x 2(Top/bottom) = _____ inches

Thickness of wale doubled (two 2″ x 4″): 3" x 2 (sides) = _____ inches

Twisting and tying: 1 ½″ x 2 = _____ inches

Add total length of wire of above answers = _____ Total length of wire in inches

(c) Calculate the total linear feet of wire required

(_____# of Intersections x _____Lgt.of wire) ÷ 12 in/ft = _____ LF

x 1.1 Waste

Total wire needed _____LF

c. BRACES FOR WALL FORMS.

(1) External Forces - wind, men, and equipment will move forms out of place or tend to tip them over. Braces are used to prevent this possible movement.

(2) Design.

(a) Expedient.

1 Brace every stud or every other stud.

2 Ensure brace angle is between 20 to 60 degrees.

3 Brace supports are required, if angle brace is greater than 6.5 feet.

(b) Exact Method.

1 Terms- To work the formula, you first must understand the following terms.

Lb- The total length of the brace member in feet from end connection to end connection.

Lmax - The maximum allowable unsupported length of the brace in feet, due to buckling and bending. For 2" material = 6.5'; for all 4" material = 14.5'.

L - The actual unsupported length of the brace used in feet.

H - The overall height of the wall form in feet.

Y - The point of application of the brace on the wall form, measured in feet from the base of the form.

Ø = The angle in degrees, that the brace makes with the horizontal. For best effect, **Ø** should be between 20 and 60 degrees.

J - Factor applied which includes all constant values (material properties and assumed wind force) measured in ft4; use Table 4-6, page 4-13.

Material, in Inches	J, In Feet^4
2 x 4	2,360
2 x 6	3,710
2 x 8	4,890
2 x 10	6,240
2 x 12	7,590
4 x 4	30,010

COS - cosine; Ratio of the distance from the stake to the wall divided by the length of the brace.

SIN - sine; The ratio "Y" divided by "Lb".

Smax - Maximum safe spacing of braces (ft) center to center, to support the walls against external wind forces.

Formula: $\{(J \times y) \div [(h^2) \times (L^2)]\} \times \cos Ø = Smax$

2 Designing the brace support for the wall in Student Handout page 6.

H - 14.75' (14' 9") **Lmax -** 6.5' (6' 6")

Lb - 16' **Y -** 10.5 (10' 6") **L – 4'**

NOTE 1: Lb = 16'; based on the factor that our form is 14.75 feet high, we determined that a 16'- 2^2 x 4^2 would be needed.

NOTE 2: Y = (10.5); this is randomly picked as a starting point that will fall into the 20 to 60 degree angle range.

NOTE 3: For our project we will use 4' as L, because it will divide evenly into 16' and is within our requirements)

a To determine **J;** consult Table 4-6 on page 4-13. Using 2" x 4" material, the **J** factor is 2,360.

b Determine the angle of placement, **Ø** through the following equation.

$$\sin Ø = \frac{y}{Lb} \qquad \sin Ø = \frac{10.5}{16} = \_\_\_\_\_$$

c Using the TRIGONOMETRIC TABLE on page 10-9 of FM 5-34, determine the **DEGREE OF ANGLE,** and the **COSINE.**

Sin Ø = .656 **Degree of angle Ø = _____ degrees**

Cosine = _____

d With the information we now have, we can determine the **Smax** of our braces, using the following equation.

{(J x y) , [(h^2) x (L^2)]} x cos Ø = Smax

{(____ x ____) , [(_____x_____) x (_____x____)]}

[_____ x _____]}

{(_____) , [_____]}

{_____} x _____ = _____

(ANSWER)

e The braces must be attached to a stud, and since our stud spacing is 15" we can adjust our **Smax** to **5'** and brace every 4th stud.

4. **Materials Estimation for Concrete**: After designing a mix and a form design, it is necessary to estimate the total amounts of material needed for the job.

a. Compute the total volume of concrete to be poured, adding a waste factor, and multiplying this volume times the amount of each component in the 1 cubic yard mix design.

EXAMPLE PROBLEM: Estimate the quantities of cement, water, sand, and gravel required to construct the concrete retaining wall from Shudent Handout page 6. Use the mix design calculated for 1 cubic yard.

SUMMARY

Cement = **641.3** Lbs/cy ÷ **94** = **6.82** Sacks/cy

Water = **295** Lbs/cy ÷ **8.33** = **35.41** Gallons/cy

Sand = **1177.36** Lbs/cy ÷ **120 BUW** = **9.81** cf/y

Gravel = **1795.50** Lbs/cy ÷ **95 BUW** = **18.9** cf/cy

Procedure

(1) To figure for total cubic yards of concrete use the following formula:

[(Length x Width x Height) ¸ 27 cf] = Total cubic yards needed to pour

NOTE 1: THIS IS A STANDARD FORMULA FOR CONCRETE. THERE ARE 27 CUBIC FEET IN A CUBIC YARD OF CONCRETE.

NOTE 2: FOR A PROJECT FORM LIKE THE ONE WE HAVE BEEN DESIGNING, IT IS EASER TO FIGURE FOR EACH SECTION SEPERATELY. THEN ADD THEM TOGETHER FOR TOTAL YARDAGE.

(a) Wall [(_____' x _____' x _____') ÷ 27] = _____cy
Lgt Hgt Thickness (**ANSWER**)

(b) Slab [(_____' x _____' x _____') ÷ 27] = _____cy
Lgt Wth Thickness (**ANSWER**)

(c) Add the cy for both wall and slab: Total = _____cy

(**ANSWER**)

(d) Add waste factor

1 When ordering concrete, use the following waste factor as a rule of thumb.

a Volume > 200 CY, Waste Factor = 5%

b Volume ≤ 200 CY, Waste Factor = 10%

c Project Volume with the waste factor

_____Total cy x _____waste factor = (Rd. up whole #)_____TOTAL CY
(**ANSWER**)

(e) Order Quantities

1 Ordering by each concrete mix ingredients.

NOTE 1: REMEMBER TO ORDER 8 GALLONS OF WATER PER SACK OF CEMENT.

NOTE 2: WHEN ORDERING SAND AND GRAVEL ORDER BY TONNAGE OR CUBIC YARDS.

Total cubic yards X Quantities = Required material to order

Cement: _____ x _____Sacks =_____Total Sacks (Rd up to a full sack)

Sand: (_____ x _____Lbs.) ÷ 2000 =_____Tons (Rd up to whole #)

Gravel:(_____ x _____Lbs.) ÷ 2000 =_____Tons (Rd up to whole #)

Water: _____ x _____Gallons =_____Total Gallons

2 Ordering through a Commercial Ready Mix Company.

a The commercial ready mix trucks are capable hauling from 8 to 10 cubic yards of concrete. Most commercial concrete companies prefer to haul at least three yards or more on each truck. If you need less than three yards of concrete, the company may charge an extra fee.

b Procedures for ordering concrete from a commercial source will depend on your unit's purchasing policies. Most units would

require you to inform the Supply NCOIC of your request. He in turn, would notify the Purchasing And Contracting Branch who would then contact the commercial concrete company that will give the best price for the concrete. However, it is up to you, the requester, to inform the Supply NCOIC of any specifications that the Concrete Company may need to know, e.g., type of concrete, slump, PSI's, air entrainment, etc.

5. **REBAR**:

a. Basic Theory.

(1) Although concrete is strong in compression, it is relatively weak in tension. But the reverse is true for slender steel bars. Therefore, when the two are materials are combined, one makes up the deficiency of the other.

(2) The design of a reinforced concrete structure consists mainly of predicting both the position and direction of potential tension cracks in concrete, and in preventing the cracks by locating sufficient reinforcing steel across their positions.

(a) **Shear** - An action or stress resulting from applied forces that causes or tends to cause two contiguous parts of a body to slide relatively to each other in a direction parallel to their plane. Shear strength of concrete is about one-third the unit compressive strength.

(b) **Tensile Strength -** The greatest longitudinal stress a substance can bear without tearing apart. Tensile strength is less than one-half the shear strength. Horizontal steel bars well embedded in the tension area provide tensile resistance.

(c) **Bending Strength** - Tension by curving or bowing. A beam subjected to a bending moment deflects because its compression side shortens and its’ tension side lengthens. Therefore, the weak tension areas must be reinforced with steel.

b. Identification of Steel.

(1) Welded Wire Fabric - Its primary use is to control crack widths due to temperature changes.

(a) Does not add reinforcement

(b) Used to prevent shrinkage cracks

(2) Deformed Steel Bars - Bars are available in 11 sizes designated by numbers that range in size from 3/8 inch to about 2-1/4 inch in diameter.

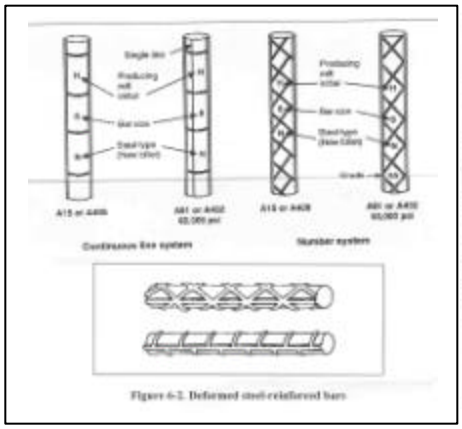

Figure 6-2. Deformed steel reinforced bars

Table 6-1. Standard steel reinforcing bar

Bar Designation Number*	Unit Weight, in Pounds per Foot	Diameter, in Inches	Area, in Square Inches	Perimeter, in Inches
3	.376	0.375	0.11	1.178
4	.668	0.500	0.20	1.571
5	1.043	0.625	0.30	1.963
6	1.502	0.750	0.44	2.356
7	2.044	0.875	0.60	2.749
8	2.670	1.000	0.79	3.142
9	3.400	1.128	1.00	3.544
10	4.303	1.270	1.27	3.990
11	5.313	1.410	1.56	4.430
14	7.65	1.693	2.25	5.320
18	13.60	2.257	4.00	7.090

NOTE: The nominal dimensions of a deformed bar are equivalent to those of a plan round bar having the same weight per foot as the deformed bar.

*Bar numbers are based on the number of eighths of an inch included in the nominal diameter of the bars (example: a number 3 bar is 3/8 inch in diameter).

c. Fabrication. Splicing - Because reinforcing bars are available only in certain lengths, you must splice them together for longer runs. If one bar is not long enough for the spans, never butt reinforcing bars. A common way to splice bars is to lap them.

(1) Principles. It is usually best to locate splices beyond the center of a beam. When possible, stagger the splices so that all of them do not fall at the same point.

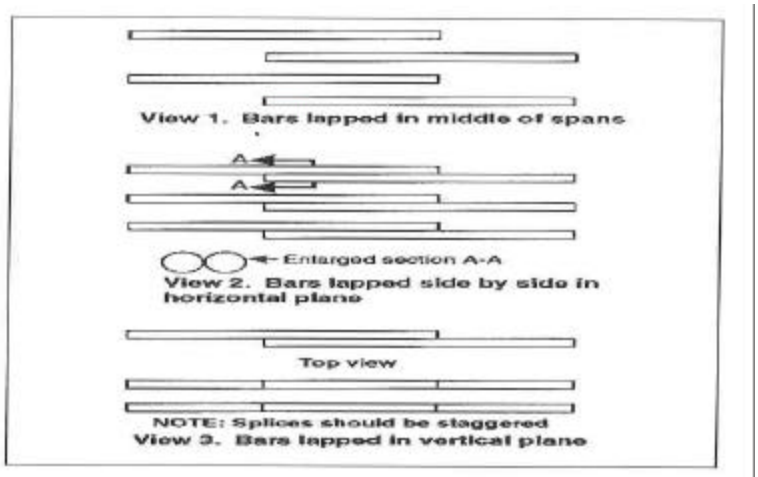

Figure 6-8. Method of splicing reinforcing bars

Table 6-4. Minimum splice overlap

(2) Methods.

(a) The Splicing Method is satisfactory when bar spacing is large, but do not use this method in a similar member having several closely spaced bars, or when the overlapping section interferes with the proper bar covering or form filling.

(b) Lapping bars in a horizontal plane is the most practical arrangement if the spacing provides enough clearance for aggregate to pass.

(c) Lapping bars in a vertical plane is used when the aggregate is too large for the horizontal plane method.

(d) Lap Welded Wire Fabric should be spliced and tied at one square plus 2 inches.

(3) Cutting Reinforcing Steel.

(a) Bolt cutters

(b) Hacksaw

(c) Rebar Cutting Set

d. Bending of bars. Hooks should be fabricated to meet dimensional requirements stated in table 6-3, page 6-8, FM 5-742.

Table 6-3. Recommended end hooks (all grades)

Bar Size Number	D*	180° Hooks		90° Hooks
		A or G	J	A or G
2	2 1/4"	5"	3"	6"
4	3"	6"	4"	8"
5	3 3/4"	7"	5"	10"
6	4 1/2"	8"	6"	12
7	5 1/4"	10"	7"	14"
8	6"	11"	8"	16"
9	9 1/2"	13"	11 3/4"	19"
10	10 3/4"	15"	11 1/4"	22"
11	12"	17"	12 3/4"	24"
14	18 3/4"	23"	19 3/4"	31"
18	24"	30"	24 1/2"	41"

*D = Finished bend diameter.

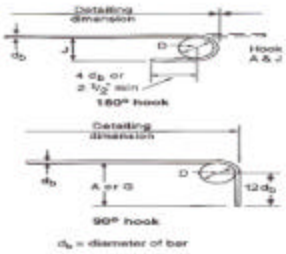

e. Placement.

(1) Spacing is based on specifications. Check alignment and overlap.

(2) Cover Minimums are based on several factors.

(a) If the concrete structure is cast against and will be permanently exposed to the earth should have a minimum concrete cover around the reinforcing steel of 3 inches.

(b) If the concrete structure is exposed to the earth or weather using #6 through #18 bars should have a minimum concrete cover around the reinforcing steel of 2 inches.

(c) If the concrete structure is exposed to the earth or weather using #5 bars should have a minimum concrete cover around the reinforcing steel of 1-1/2 inches.

(d) Concrete structures such as slabs, walls, and joists, using #14 and #18 bars that are not exposed to weather nor in contact with the ground should have a minimum concrete cover around the reinforcing steel of 1-1/2 inches.

(e) Concrete structures such as slabs, walls, and joists, using #11 bars and smaller that are not exposed to weather nor in contact with the ground should have a minimum concrete cover around the

reinforcing steel of 3/4 inch.

(f) Concrete structures such as beams and columns with the primary reinforcement being ties, stirrups, or spirals that are not exposed to weather or in contact with the ground should have a minimum concrete cover around the reinforcing steel of 1-1/2 inches.

(g) Concrete structures exposed to salt water should have a minimum concrete cover around the reinforcing steel of 4 inches.

f. Supports.

(1) All steel reinforcement must be accurately located in the forms and held firmly in place both before and during placing of concrete.

(2) Manufactured - High Chairs, Bolsters usually support the horizontal reinforcing bars and hold them in place during construction. Support horizontal bars at minimum intervals of 5 or 6 feet, and secure all bars to supports and other bars using tie wires not smaller than 18 gage. The twisted tie ends should project away from an interior surface.

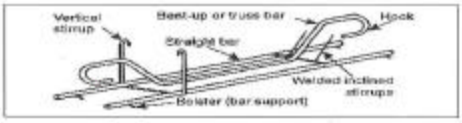

Figure 6-4. Typical shapes of reinforcing steel for beams

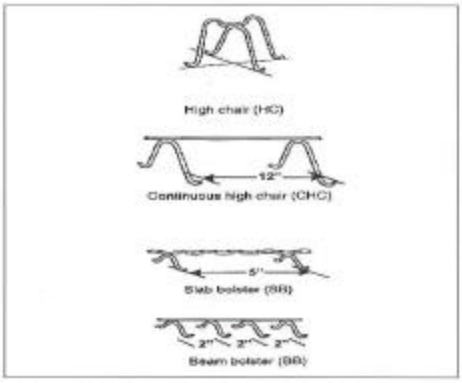

Figure 6-5. Supports for horizontal reinforcing steel

(3) Field Expedient - Wire Fabric, Mortar Cubes

(a) Wire fabric is sometimes used to pre-assemble the reinforcing steel for concrete walls in place.

(b) Mortar cubes can be made from the mortar having the same consistency as the concrete, but without the coarse-aggregate. Spacer blocks are usually 1-1/2 inches to 4 inches square, varying in length as required. Cast tie wires into the blocks to secure them to the reinforcing bars.

6. **Quality Control**:

a. Testing Materials

(1) Cement.

(a) Storage - Portland Cement that is kept dry will retain its quality indefinitely. Store sacked cement in a warehouse or shed that is as nearly airtight as possible.

1 Keep Dry, Palletized, Covered
2 Use old cement first
3 Stack 14 bags high if used < 60 days
4 Stack 7 bags high if used > 60 days

(b) Packing sacks to tightly or too high cause warehouse Pack.

1 Looks solid
2 Will return to powder form
3 Usable

(c) Partial Hydration is caused when moisture comes in contact with the cement.

1 Lumpy, Gritty
2 Has lost some strength
3 Will not break down to powder

(2) Excess Fines on Sand

(a) Lab Test: Sieve Analysis

(b) Field Test

1 2" Sand, 3" of Water above the sand level
2 Shake
3 Let Stand 1 hour
4 1/8" Silt or less is good sand

(c) Course of Action

1 Find another source
2 Resift, Wash

b. Site Preparation.

(1) Prior to placing check the trimming, compaction, and moistening of the subgrade. Moistening the subgrade is especially important in hot weather to prevent water extraction from the concrete.

(2) Check placement of forms.

(3) Check placement of anchor bolts. It is used to anchor either machinery, or structural steel and wood frame components.

(a) Meet Specification

(b) Properly aligned

(4) Air Content (Air-entrained concrete only)

(a) Acceptance ±1%

(b) Air Entrainment Meter

c. Construction Joints.

(1) Isolation Joints. These joints are used to separate adjacent structural members.

(2) Control joints. These joints are cut into the concrete slab to create a plane of weakness which forces cracking (if it happens) to occur at a designated place rather than randomly.

(3) Construction Joints. These joints are made where the concrete placement operations end for the day or where one structural element will be cast against previously placed concrete.

d. Placing.

(1) The principles of proper concrete placement include:

(2) Segregation. Avoid segregation during all operations from the mixer to the point of placement, including final consolidation and finishing.

(a) Place against previous load in layers of 6 to 12 inches.

(b) Never allow concrete to free fall more than 5 feet.

(c) Chutes no flatter than 3:1 and no stepper than 2:1 ratio.

(3) Consolidation. Thoroughly consolidate the concrete, working solidly around all embedded reinforcement, and filling all form angles and corners. Vibrate every foot for 3 to 5 seconds.

(4) Bonding. When placing fresh concrete against or upon hardened concrete, make sure that a good bond develops.

e. Finishing. The finishing process provides the desired final concrete surface. There are many ways to finish concrete surfaces, depending on the effect required.

(1) Screed. Screeding brings the surface to the correct elevation by striking off the excess concrete.

(2) Float. Floating has three purposes: to embed aggregate particles just beneath the surface; to remove slight imperfections, high

spots, and low spots; and to compact the concrete at the surface in preparation for other finishing operations.

(3) Trowel. For a dense, smoother finish, follow floating with steel troweling when the moisture film or water sheen disappears from the floated surface and the concrete has hardened enough to prevent fine material and water from working to the surface.

(4) Broom. Brooming can produce a nonskid surface by following the floating operation (after waiting 10-15 minutes) by brooming the concrete before it hardens thoroughly.

(5) Edger and jointer. For rounding the edges or control joints.

f. Curing. Take the appropriate steps to control the temperature of any fresh concrete from mixing through final placement, and protect the concrete from temperature extremes after placement.

(1) Desired Concrete Temperature

(a) Concrete Thermometer

(b) Acceptance $\pm 5\ ^{o}F$

(2) Adjustment Temperature

$$Ra = \frac{(Rd \times Ta)}{Td}$$

NOTE: Ra = Rate of placement adjusted
Rd = Rate of placement designed
Ta = Temperature actual
Td = Temperature designed

(3) Curing is the period of time from consolidation to the point where the concrete reaches its design strength.

(a) Moisture - Several curing methods will keep concrete moist and, in some cases, at a favorable hydration temperature. They fall into two categories: those that supply additional moisture, and those that prevent moisture loss.

(b) Temperature - 73 degrees Fahrenheit

(c) Time 3-14 days

(4) Adverse Weather Conditions.

(a) Hot weather.

1 Effects

a Rapid Evaporation

b Flash Set - Cracking

c Reduced Workability

2 Courses of Action

a Retarding Admixture

b Cool aggregates

c Ice water

d Work at night

e Shade, Cover

f Flood, Spray

(b) Cold Weather

1 Effects

a Slow curing

b Freezing concrete

2 Courses of Action

a Accelerator Admixture - 2% CaCl

b Use Type III Cement

c Heat Aggregates, Water

d Insulate

e Enclose and heat structure

(c) Wet Weather

1 Effects

a Change water cement ratio

b Affect finish

2 Courses of Action

a Delay project

b Cover

c Increase Crew size

7. **Slab projects**. Concrete slabs on grade are the most often constructed concrete projects by engineer units.

a. Basic assumptions.

(1) Minimum slab thickness will be 4 inches for Class 1, 2 and 3 floors.

(2) Only the static load (SL) area and flexural strength required will be considered, ie. Heaviest concentrated load the slab carries.

b. Design procedure.

EXAMPLE: Determine the slab thickness for the floor of a wheeled vehicle shop. Total weight on one wheel is 7,500 Lbs, and the loaded area = 40 square inches. Abrasive wear is expected. Maximum size aggregate from the source is 1 inch.

(1) Determine the floor classification; page 4-20, Table 4-9.

Class = _____**(ANSWER)**

Table 4-9. Concrete floor classifications

Class	Usual Traffic	Use	Special Consideration		Concrete Finishing Technique
1	Light foot	Residential or tile-covered	Grade for drainage; make plane for tile		Medium steel trowel
2	Foot	Offices, churches, schools, hospitals Ornamental residential	Nonslip aggregate; mix in surface Color shake, special		Steel trowel; special finish for nonslip Steel trowel, color, exposed aggregate; wash if aggregate is to be exposed
3	Light foot and pneumatic wheels	Drives, garage floors, sidewalks for residences	Crown; pitch joints Air entrainment		Float, trowel, and broom
4	Foot and pneumatic wheels*	Light industrial commercial	Careful curing		Hard steel trowel and brush for nonslip
5	Foot and wheel abrasive wear*	Single-course industrial, integral topping	Careful curing		Special hard aggregate float and trowel
6	Foot and steel-tire vehicles - severe abrasion	Bonded two-course, heavy industrial	Base	Textured surface and bond	Surface leveled by screeding
			Top	Special aggregate and/or mineral or metallic surface treatment	Special disc-type power floats with repeated steel troweling
7	Same as classes 3, 4, 5, 6	Unbonded topping	Mesh reinforcing; bond breaker on old concrete surface; minimum thickness 2 1/2 inches		

***Under abrasive conditions on floor surface, the exposure will be much more severe and a higher quality surface will be required for class 4 and 5; for a class 6, two-course floor, a mineral or metallic aggregate monolithic surface treatment is recommended.**

(2) Determine the Slump Range and the Minimum Compressive Strength (F’c).

Slump = _____**(ANSWER)** F’c = _____**(ANSWER)**

Table 4-10. Recommended slumps and compressive strengths

Class of Floors	Slump Range, in inches	Minimum Compressive Strength, f'_c in Pounds per Square Inch*Use
1	2-4	3,000
2	2-4	3,500
3	2-4	3,500
4	1-3	4,000
5	1-3	4,500
6 base	2-4	3,500
6 topping**	0-1	5,000 - 8,000
7	1-3	4,000

NOTE: These recommendations are specially for concrete made with normal-weight aggregate. For structural slabs, the requirements of ACI 318 and the contract documents should be met.

***Refer to the minimum compressive strength of cylinders made and tested according to applicable ASTM standards for 28 days. The average of any five consecutive strength tests of continuously moist-cured specimens representing each class of concrete should be equal to or greater than the specified strength.**

****The cement content of the heavy-duty floor topping depends upon the severity of the abrasion. The minimum is 846 pounds per cubic yard.**

(3) Determine the allowable flexural tensile stress (F’t);

Formula: F’t = 4.6 x (Square of F’c)

F’t = 4.6$\sqrt{_____}$ =_____Round up next whole number =_____**(ANSWER)**

(4) Determine the equivalent static load (ESL). Generally, the expected impact loading is 25% more than the static load (SL) for vehicles; ESL = (1 + 25%) x SL

ESL = (1.25) x _____Lbs. = _____**(ANSWER)**
SL

(5) Correct the equivalent static load (CESL), if F’t ≠ 300 psi. This is necessary to use the standard thickness figure chart;
CESL = ESL x (300 ÷ F’t)

CESL = _____x (300 ÷ _____) = _____Round up next whole

number = _____Lbs.**(ANSWER)**

(6) Determine slab thickness; page 4-21, figure 4-6 (Round up to

the next higher 1/4 inch thickness; _____**(ANSWER)**

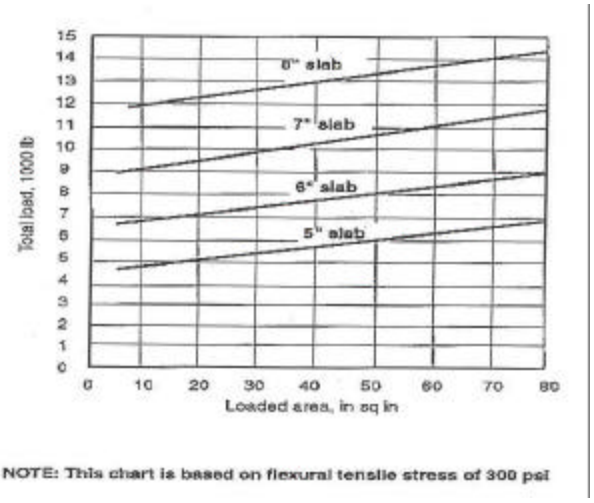

NOTE: This chart is based on flexural tensile stress of 300 psi

(7) Determine the minimum cement content and recommended air content; page 4-21, table 4-11; _____**Lbs/CY and** _____**%(ANSWER).**

Maximum Size of Coarse Aggregate	Minimum Cement Content, in Pounds per Cubic Yard	Air Content for Freeze-Thaw Resistance, Shown in Percentage*
1 1/2	470	5 ± 1
1	520	6 ± 1
3/4	540	6 ± 1
1/2	590	7 1/2 ± 1
3/8	610	7 1/2 ± 1

NOTES: These mixtures are specially for concrete made with normal-weight aggregate; different mixtures may be needed for lightweight aggregate concrete. For structural slabs, the requirements of ACI 318 and the contract document must be met.

*Smaller percentages of entrained air can be used for concrete floors that will not be exposed to freezing and thawing or deicing. This may improve the workability of the concrete and the finish product.

(8) Procedure with the same steps as figuring for the design for one cubic yard.

8. **Controlled Practical Application**:

a. The following student materials are needed to complete this practical application.

(1) Student Outline

(2) Calculator

(3) FM5-742, Concrete and Masonry

b. Read all directions carefully.

c. This practical application is self paced. **DO NOT** advance to fast in order that the instructor may check your work.

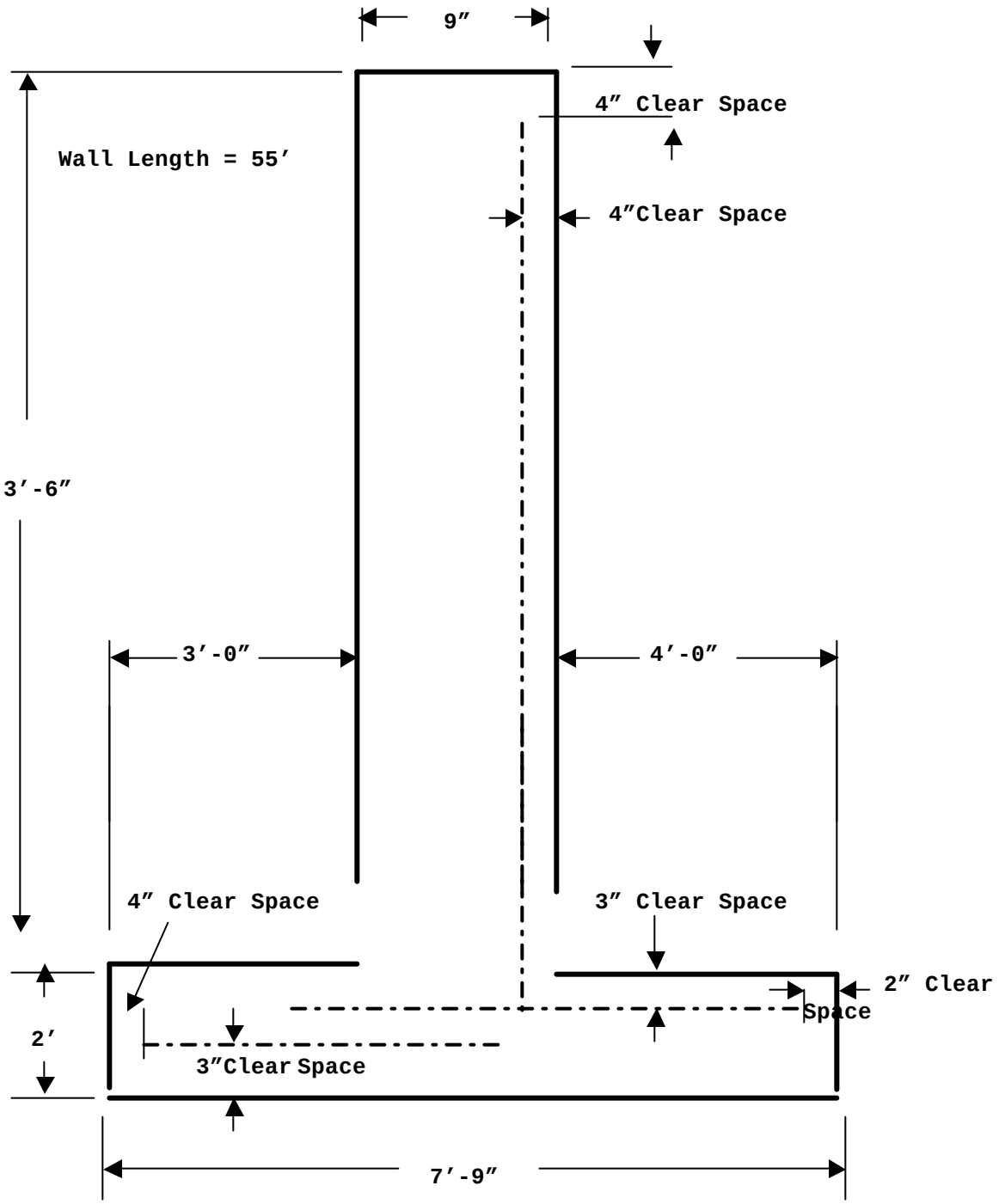

SPECIFICATIONS:

Strength @ 28 days – 4000 psi

Cement Types Available I, IA, IIIA

Water is from a potable source

FINE AGGREGATES:

	F.M.	S.G.	BUW	% FINES
Source A	2.60	2.80	125 Lbs.	4
Source B	2.85	2.60	120 Lbs.	7

COURSE AGGREGATES:

	TYPE	MSA	S.G.	BUW	% FINES
Source A	Gravel	3 inch	2.52	125 Lbs.	1.0
Source B	Gravel	2 inch	2.70	115 Lbs.	1.0
Source C	Gravel	1 inch	2.60	110 Lbs.	0.5

PART ONE (1): OBTAIN PRELIMINART MIX PROPORTIONS

OBTAIN THE PRELIMINARY MIX PROPORTIONS FOR A ONE CUBIC YARD CONCRETE MIX TO BE USED IN A **REINFORCED RETAINING WALL**. IT WILL BE CONSTRUCTED AT CAMP LEJEUNE, NC. **THE CLIMATE IS MODERATE**. **TWO (2) 11-S MIXERS** ARE AVAILABLE.

PROCEDURE:

1. Select Cement Type: _____ **(ANSWER)**

2. Select Aggregates:

   a. Fine Aggregate Source: _____ **(ANSWER)**

   b. Course Aggregates:

      1) Maximum size aggregates allowable for the project:

MSA for Wall = _____ **(ANSWER)**

MSA for Slab = _____ **(ANSWER)**

MSA for Clear Space = _____ **(ANSWER)**

MSA for Mixing Equipment Type used _____ = _____ **(ANSWER)**

MSA possible to use for this Project = _____ (ANSWER)

2) Choice of Course Aggregate Source: _____ **(ANSWER)**

3. Select Water: Cement Ratio:

a. Durability/Water Tightness _____ **(ANSWER)**

b. Strength _____ **(ANSWER)**

c. Chosen Water: Cement Ratio _____ **(ANSWER)**

4. Select Slump Design: _____ **(ANSWER)**

5. Select Water Content and Percent of Air:

a. Water Content _____ **(ANSWER)**

b. Air % _____ **(ANSWER)**

6. Calculate Cement Content: _____ **(ANSWER)**

7. Calculate Gravel Content/Weight:

a. Loose Volume of Gravel = _____ **(ANSWER)**

b. Weight of Gravel = _____ **(ANSWER)**

8. Calculate Sand Content:

a. Convert to Absolute Volumes

1. CEMENT: _____ **(ANSWER)**

2. WATER: _____ **(ANSWER)**

3. Gravel: _____ **(ANSWER)**

4. Air: _____ **(ANSWER)**

5. Partial Volume: _____ **(ANSWER)**

6. Absolute Volume of Sand: _____ **(ANSWER)**

7. Weight of Sand: _____ **(ANSWER)**

8. Loose Volume of Sand: _____ **(ANSWER)**

9. Preliminary Mix Proportions for a One (1) Cubic Yard:

Cement _____ Sacks/Cy **(ANSWER)**

Water _____ Gallons/Cy **(ANSWER)**

Sand _____ CuFt/Cy **(ANSWER)**

Gravel _____ CuFt/Cy **(ANSWER)**

Air _____ % **(ANSWER)** Slump _____ Inches **(ANSWER)**

PART TWO (2) BATCH PROPORTIONS

1. Determine the batch proportion for the 11s mixer:

a. Total Cubic Feet of all ingredient proportions = _____**(ANSWER)**

b. **Cubic Feet of Cement per Batch** = _____ **(ANSWER)**

c. **Gallons of Water per Batch** = _____ **(ANSWER)**

d. **Cubic Feet of Sand per Batch =** _____ **(ANSWER)**

e. **Cubic Feet of Gravel per Batch** = _____ **(ANSWER)**

PART THREE (3) ADJUST MIX DUE TO THE FREE SURFACE MOISTURE

THE MATERIALS ARE ON SITE. PRIOR TO STARTING MIXING OPERATIONS, YOU PERFORM A FIELD TEST ON YOUR AGGREGATES. YOU DETERMINE THAT YOU HAVE **APPROXIMATELY 2% FREE SURFACE MOISTURE ON YOUR FINE AGGREGATES**, AND **1% ON YOUR COURSE AGGREGATES.**

1. Determine the amount of water:

   a. Sand = _____ Lbs. of FSM **(ANSWER)**

   b. Gravel = _____ Lbs. of FSM **(ANSWER)**

   c. Total Pounds of FSM = _____ Lbs. **(ANSWER)**

2. Amount of Mixing Water after adjustment for FSM: _____ Lbs/batch **(ANSWER)**

3. Adjust the Aggregates due to Bulking from FSM:

Sand = _____ cuft/batch due to FSM **(ANSWER)**

Gravel = _____ cuft/batch due to FSM **(ANSWER)**

4. Adjusted Mix Design for (1) Mixer Batch due to FSM:

   Cement _____ Lbs. **(ANSWER) or** _____ Sacks/Batch **(ANSWER)**

   Water _____ Lbs. **(ANSWER) or** _____ Gallons/Batch **(ANSWER)**

   Sand _____ Cf/Batch **(ANSWER)**

Gravel _____ Cf/Batch **(ANSWER)**

Slump _____ **(ANSWER)**

PART FOUR (4) FORM DESIGN

DESIGN THE FORMS FOR THE CONCRETE RETAINING WALL. **TWO (2) 11s MIXER** WILL BE USED. THE CREW IS EXPERIENCED WITH A **FIVE (5) MINUTES BATCHING** TIME. CONCRETE TEMPERATURE IS ESTIMATED AT **70 DEGREES FAHRENHEIT**.

MATERIAL AVAILABLE:

2 x 4 LUMBER, 3/4 PLYWOOD **(STRONGWAY)**, # **9** GAGE TIE WIRE
Single member stud, Double member wale

Procedure:

1. Mixer Output: _____CuFt per Hour **(ANSWER)**

2. Plan Area: _____ SF **(ANSWER)**

3. Rate of Placement: _____ Feet Per Hour **(ANSWER)**

4. Time Required to Pour Concrete: _____ **(ANSWER)**

5. Estimated Concrete Pressure: _____ **(ANSWER)**

6. Maximum Stud Spacing: _____ **(ANSWER)**

7. Uniform Load On Stud: _____ **(ANSWER)**

8. Maximum Wale Spacing: _____ **(ANSWER)**

9. Uniform Load on Wale: _____ **(ANSWER)**

10. Tie Spacing based on ULW: _____ **(ANSWER)**

11. Tie Spacing based on Strength: _____ **(ANSWER)**

12. Maximum Tie Spacing: _____ **(ANSWER)**

13. Adjusted Tie / Stud Spacing: _____ **(ANSWER)**

PART FIVE (5) ESTIMATE MATERIALS

ESTIMATE THE MATERIALS NEEDED FOR THE CONCRETE RETAINING WALL.

MATERIAL AVAILABLE:

2 x 4 LUMBER, 3/4 PLYWOOD, # 9 GAGE TIE WIRE

1. Required Number of Studs Per Side: _____Per Side **(ANSWER)**

2. Required Number of Wales Per Side: _____Per Side **(ANSWER)**

3. Determine number of Sheathing Required: _____Total Sheets **(ANSWER)**

4. Determine Stud Requirements: _____ Total Studs **(ANSWER)**

_____ Best EOL **(ANSWER)**

_____ Total Board Feet **(ANSWER)**

5. Determine Material for Wales: _____ LF **(ANSWER)**

   _____ Best EOL **(ANSWER)**

   _____ Total Board Feet**(ANSWER)**

6. Determine # of Tie Wire: _____ Total Intersections **(ANSWER)**

7. Determine Total Linear Feet of Tie Wire: _____ Total LnFeet **(ANSWER)**

8. Determine Total Amount of Concrete Material:

   a. Preliminary Mix Proportions **for One (1) Cubic Yard**:

      Cement _____ Sacks

      Water _____ Gallons

      Sand _____ Cubic Feet = _____ Lbs.

      Gravel _____ Cubic Feet = _____ Lbs.

   b. Figure For Total Cubic Yards = _____ Total Cubic Yards **(ANSWER)**

   c. Order Quantities

Cement _____ Total Sacks **(ANSWER)**

Water _____ Total Gallons **(ANSWER)**

Sand _____ Total Tonnage **(ANSWER)**

Gravel _____ Total Tonnage **(ANSWER)**

REFERENCES:

1. FM 5-34, Engineer Field Data

2. FM 5-426, Carpentry

3. FM 5-428, Concrete and Masonry

UNITED STATES MARINE CORPS
COMBAT ENGINEER INSTRUCTION COMPANY
MARINE CORPS ENGINEER SCHOOL
PSC BOX 20069
CAMP LEJEUNE, NORTH CAROLINA 28542-0069

C-23D01
6 Jun 00
(95 POI)

STUDENT HANDOUT

ENGINEER RECONNAISSANCE

STUDENT ASSIGNMENT (Read Patrolling Section of outline prior to class)

1. PURPOSE: The purpose of this lesson is to teach you the fundamentals of reconnaissance and the basic knowledge of reconnoitering routes for military use.

2. INTRODUCE LEARNING OBJECTIVE(S):

a. TERMINAL LEARNING OBJECTIVE(S):

(1) Provided a mission, an area map, a compass, measuring tape, reconnaissance report forms (DA Form 1711R, 1248 1249, 1250, 1251, and 1252) and personnel, organize an engineer reconnaissance patrol in accordance with FM 5-34, FMFM 6-7, TM 5-312, GTA 5-2-5 and FM 5-36 (1371.2.13)

(2) Provided a mission, an area map, a compass, measuring tape, reconnaissance report forms (DA Form 1711R, 1248 1249, 1250, 1251, and 1252) as a member of a team, perform an engineer route reconnaissance in accordance with FM 5-34, FMFM 6-7, TM 5-312, GTA 5-2-5 and FM 5-36 (1371.2.13)

(3) Provided a mission, a completed hasty road reconnaissance report (DA Form 1711R, 1248 1249, 1250, 1251, and 1252) and FM 5-34, FMFM 6-7, TM 5-312, GTA 5-2-5 , complete an overlay for the reconnaissance in accordance with FM 5-34, FMFM 6-7, TM 5-312, GTA 5-2-5 and FM 5-36 (1371.2.13)

b. ENABLING LEARNING OBJECTIVE(S):

(1) Given a mission, maps, and equipment, reconnoiter an area in accordance with FMFM 6-7.(1371.2.15)

(2) Given a mission and reconnaissance forms, with the aid of references, complete the forms in accordance with FM 5-36.(1371.2.15)

(3) Given reconnaissance forms, a map, and overlay paper, with the aid of references, complete an overlay in accordance with FM 5-36.(1371.2.15)

3. Definitions:

a. Patrol. A patrol is a detachment of ground forces sent out by a larger unit for the purpose of gathering information or carrying out

destructive, harassing, or security type missions. Patrols may range in size from fire team to platoon depending on the type of patrol, its mission, and its distance from the parent unit. Patrols are limited only by the ingenuity with which they are employed, and the skill and aggressiveness of their members. Extensive patrolling provides one of the most effective information gathering agencies available to the commander of a tactical unit.

b. Reconnaissance. Reconnaissance is a mission undertaken to obtain, by visual observation or other detection methods, information about the activities and resources of an enemy, potential enemy or the geographic characteristics of a particular point/area.

4. Patrolling requires proficiency in many areas and is attained only through carefully planned practical exercises based upon realistic situations.

a. Leadership

b. Combat Intelligence

c. Map reading and land navigation

d. Team work

e. Small unit tactics

f. Communications

g. Ability to operate at night

h. Camouflage and concealment

i. Knowledge and use of supporting arms

j. Security

5. Types of Patrols. There are two general types of patrols which are classified according to the nature of the mission assigned. They are:

a. Reconnaissance Patrol. The commander needs information about the enemy and the terrain the enemy controls. The information must be accurate and timely to assist him in making tactical decisions. Reconnaissance patrols are one of the most reliable means for obtaining this information. Reconnaissance patrols engage enemy only to accomplish their mission or for protection. In general, they avoid contact and accomplish the mission by stealth. A reconnaissance patrol is capable of carrying the search for information into the area occupied by enemy forces and is capable of examining objects and events at close range. The distance reconnaissance patrols cover varies. The squad is ideally suited for reconnaissance patrol missions.

b. Combat Patrols. Combat patrols provide security, establishes and/or maintains contact with friendly and enemy forces, denies the enemy access to terrain, and harasses, destroys, or captures enemy personnel, equipment and installations. They have a secondary mission to collect and report information. There are six types of combat patrols.

(1) Raid Patrol. A combat patrol whose mission is to attack a position or installation for the purpose of:

(a) Destroying the position or installation.

(b) Destroying or capturing personnel or equipment.

(c) Liberating personnel.

Surprise, firepower and violence of action are the keys to a successful raid.

(2) Ambush Patrol. A surprise attack from a concealed position upon a moving or temporarily halted target.

(3) Contact Patrol. A combat patrol whose mission is to establish and maintain contact to the front, flanks, or rear, with friendly or enemy forces when their exact locations are not known. Contact patrols do not engage in decisive combat with the enemy forces.

(4) Economy of Force Patrols. A patrol organized to attack a defended or undefended objective, establish road blocks, seize key terrain, or act as a blocking force.

(5) Security Patrols. A combat patrol whose mission to screen flanks, areas, and routes. In a static situation, they prevent infiltration, detect and destroy infiltrators, and prevent surprise attack. They protect moving units, including convoys, by screening flanks, areas through which units will pass, and the routes units will use.

(6) Search and Attack. A patrol with the general mission of seeking out and attacking targets of opportunity. It is used most often in counter guerrilla operations.

6. Principles of Patrolling. There are four principles of patrolling.

a. Planning

b. Recon

c. Security

d. Control

7. Patrol Organization.

a. General. The key to successful small unit combat organization is unit cohesion. The nature of reconnaissance patrolling does not always permit long periods of preparation and rehearsal to build a unit specifically for each mission. Organization of a patrol is a two-step process. First, there is the general organization of the entire patrol and second, the task organization of various patrol members.

b. General Organization.

(1) Patrol Headquarters. The headquarters is composed of the patrol leader and the personnel who provided support for the entire patrol, such as a forward observer, corpsmen, and radio operator.

(2) Assault Section. Designate a unit to conduct the attack or assault. This unit engage the enemy at the objective by fire and maneuver.

(3) Support Section. Designate a unit to act as support. This unit will provide the base of fire in the attack or cover withdrawals or advances.

(4) Security Section. Designate a unit to provide security while in route to the objective or at the objective.

c. Task Organization: Organize the reconnaissance patrol so each individual, team, and unit is assigned a specific task or billet, keep in mind the need for individuals and units to know all tasks or billets, not just their own.

8. Reconnaissance Equipment. Patrol members are equipped as necessary for accomplishing the mission. The following are examples of gear that might be required for the completion of the mission: binoculars, compass, maps, watch, Nikonos V, alcohol pens, notebooks, and your map overlay. This list is just a small part of the gear that may be needed. Each mission should be looked at carefully by the unit commander and the appropriate gear taken.

a. Specialized Personnel Support and Equipment. There will be situations when the unit assigned to conduct a patrol does not have the necessary technical skills or equipment organic to it to successfully accomplish the patrol’s mission. In these cases, additions (attachments) are made to the unit. Examples are:

(1) Machine-gun and/or assault rocket launcher (SMAW) team/squad.

(2) Forward observer (mortar/artillery).

(3) Radio operators.

(4) Tracked vehicle crewman to assess the trafficability of the terrain.

(5) Corpsman.

(6) Other personnel as requires (snipers, translators, etc.).

9. Patrol Leaders Responsibilities. During planning and preparation, the patrol leader uses the patrol steps, a series of mental and physical processes to ensure that all required events are planned for and all patrol members know their duties. The patrol steps incorporate the troop leading procedures (BAMCIS), but are addressed in greater detail. The 12 patrol steps are:

BAMCIS	*12 PATROL STEPS*

(1) Begin planning.

1 Study the mission

2 Plan use of time

3 Study the terrain and situation

(2) Arrange for reconnaissance and coordination.

4 Organize the patrol

5 Select men, weapons, and equipment

6 Issue the warning order

7 Coordinate (continuous throughout)

(3) Make reconnaissance and complete the estimate.

8 Make a reconnaissance

(4) Complete the plan.

9 Complete detailed plans

(5) Issue the order.

10 Issue the patrol order

(6) Supervise.

11 Supervise (continuous), inspect, rehearse, and re-inspect

12 Execute the mission

a. The first patrol step is "study the mission."

(1) When receiving the mission, the patrol leader listens carefully to the operation order to ensure that he clearly understands all information, instructions, and guidance. He takes copious notes for later use in his planning. Afterwards, he asks questions if any points are not clear.

(2) Ensure that commander’s intent is understood.

(3) By studying the mission the patrol leader identifies essential tasks to be accomplished in executing the mission. These essential tasks become missions of the patrol's elements and teams. The patrol leader must also consider organization, personnel, and equipment.

b. The second patrol step is "plan use of available time."

(1) Combat situations seldom allow the patrol leader as much time for planning and preparation as he would like. When the patrol leader finishes his study of the mission, he quickly makes a mental or written time schedule which allots time for each action of the patrol.

(2) Use a planning sequence called "Reverse Planning". The patrol leader starts his schedule with the last action for which a time has been specified, and works back to the receipt of the operation order.

(3) In planning the use of time, the patrol leader ensures that subordinate leaders and patrol members are allotted enough time to prepare for the mission. The patrol leader uses the "half rule", the first half is to prepare the warning order and the second is to prepare the patrol order. This gives the subordinate leaders time to prepare their sections for the mission.

c. The third patrol step is "study terrain and situation."

(1) The patrol leader studies the terrain over which the patrol will operate and friendly and enemy situations, relating these considerations to his study of the mission.

(2) When analyzing terrain, the patrol leader makes a detailed study of maps and photos, if available. He studies notes, fields of fire and observation, cover, concealment, obstacles, key terrain features, and avenues of approach and withdrawal. He considers the influence of terrain on the execution of the mission.

(a) The terrain may influence the patrol's size, organization, and equipment.

(b) Patrol formations are influenced by the terrain.

(c) The terrain may affect the patrol's speed of movement.

(d) The terrain in the objective area helps determine the security needed and the positioning of fire support.

(3) The patrol leader studies the situation with respect to strengths, locations, dispositions, and capabilities of both friendly and enemy forces that may affect the patrol's operation.

d. The fourth patrol step is "organize the patrol."

(1) Organization consists of determining the elements and teams required to accomplish essential tasks. It is a two step process. The two steps are general and special organization.

e. The fifth patrol step is "select men, weapons and equipment."

(1) Patrol members are usually selected from the unit commanded by the patrol leader.

(a) The headquarters dispatching the patrol provides specially qualified personnel, such as linguists, guides, scout dog teams, and forward observers.

(b) The patrol leader's company or platoon may provide corpsmen and radio operators.

(2) The patrol leader should ask himself, "What weapons and equipment are needed to accomplish the mission?" The value of the weapons and equipment in accomplishing the mission is weighed against the difficulty in transporting it. Furthermore, personnel handling weapons and equipment need to be proficient in their use.

f. The sixth patrol step is "issue the warning order."

(1) Up to this time, the patrol members have no idea of the patrol's mission or what their individual role will be. The patrol leader issues a warning order to provide the patrol members with the maximum time possible to prepare for the patrol. The warning order format is as follows:

(a) SITUATION: This includes only the information the subordinate leaders need in order to prepare for the patrol. The complete situation is given in the patrol order.

(b) MISSION: This is a brief and clear statement of what the patrol must accomplish. It must tell who, what, when, where, and why.

(c) GENERAL INSTRUCTIONS: These are instructions for all members of the patrol. It consist of:

1 Organization: This explains the general and special organizations. Men are assigned to either the headquarters or one of the elements or teams.

2 Uniform and equipment common to all.

3 Weapons, Ammunition, and equipment needed for the patrol, and which element is to carry them.

4 Chain Of Command: The patrol leader designates the chain of command within the patrol. Each element leader is assigned a place within the chain of command and they set up a chain of command within their own elements.

5 Time Schedule: The patrol leader prepares a time schedule for all upcoming actions. He uses reverse planning sequence to make this schedule. The time schedule helps the patrol and element leaders make the best use of their time in planning and preparing for the mission.

6 Time, place, uniform and equipment for receiving the patrol order. The patrol leader tells his subordinate leaders when and where the order will be given and what to wear, and what equipment to bring.

7 Time and place for inspection and rehearsals.

(8) Specific Instructions to subordinate leaders. Instructions are given to special purpose teams and key men for such things as preparing explosives, checking radios, making a map study to point and compass men.

g. The seventh patrol step is "coordinate."

(1) Coordination is continuous throughout the planning, preparation, and conduct of the patrol. The patrol leader may effect coordination with staff members of the unit who can assist him, or with other units or personnel immediately affected by the patrol's operation. The unit commander or his subordinates may have conducted some coordination for the patrol leader. If at all possible, the patrol leader arranges for as much coordination as possible before leaving the area where he received the operation order. Those interested, knowledgeable personnel who may affect the patrol are centrally located there (S-2, S-3, S-4, CommO, etc.).

(2) Some examples of coordination would be with the friendly unit commander through whose lines you may have to depart or return. If the patrol will be operating in a unit's area of responsibility then they should know about it to prevent endangering or restricting the patrol. And, of course, a patrol leader should plan on fire support if available. Coordination for fire support is enacted with the Fire Support Coordinator (FSC). You may have the opportunity to submit an overlay of your planned route.

h. The eighth patrol step is "make reconnaissance."

(1) The patrol leader makes a reconnaissance while the patrol members prepare for the patrol.

(2) A visual ground reconnaissance confirms, clarifies, and supplements information provided by maps, aerial photos, and other sources. Remember, however, a great deal of time must be available to the patrol leader if he is to conduct a ground reconnaissance, if its possible at all.

(3) An aerial reconnaissance can be conducted if aircraft are available and the enemy situation is appropriate. An aerial reconnaissance is less time consuming than a ground reconnaissance and fulfills many of the same purposes of a ground reconnaissance.

(4) However, in most cases the patrol leader will conduct a map and aerial photo reconnaissance.

i. The ninth patrol step is "complete detailed plans".

(1) The patrol leader now develops his tentative plan and warning order for accomplishing the mission. This plan is later issued to the patrol in paragraphs 3, 4, and 5 of the patrol order.

(2) The following format may be used when issuing the warning order:

(a) Situation. The minimum information required to allow patrol members to begin preparation.

1 Enemy. (**SALUTE**)

a **S**ize

b **A**ctivity

c **L**ocation

d **U**nit

e **T**ime

f **E**quipment

2 Friendly (Mission and Location). (**HAS**)

a **H**igher unit

b **A**djacent units

c **S**upporting units

3 Mission.

a A brief statement of what the patrol is to accomplish and the location of the area in which it is to be done. Who, What, When, Why and Where.

4 General Instructions.

a Name

b Chain of Command

c Organization - Either a combat patrol or a reconnaissance patrol.

d Weapons, Ammo, and Equipment

e Uniform and Equipment common to all

f Time Schedule

g Specific Instructions

h Fire Support Plan - Which could include planned fires or targets of opportunity. Elements which may be needed with these would be overlays and target lists.

j. The tenth patrol step is "Issue patrol order".

(1) There are four keys to success in issuing a patrol order.

(a) After making a detailed map study, a terrain model or sand table can be built. This task can be assigned to a member of the patrol. If at all possible, take the patrol members to a vantage point.

(b) You must insure all patrol members are present, use warning orders to hold muster.

(c) You should instruct the patrol members to break out their maps and note taking materials holding all questions until the order is complete.

(d) Conclude the order with a time check.

(2) The patrol order format: (**SMEAC**)

(a) **S**ituation.

1 Enemy Forces.

a Weather.

aa Sunrise/sunset

ab Moonrise/moonset/moon phase

ac BMNT/EENT

ad Precipitation

ae State how weather will affect the patrol.

b Terrain.

(1) General description of terrain and how it will affect the patrol's size, organization and equipment.

c Enemy. (**SALUTE**)

2 Friendly Forces. (**HAS**)

a Attatchments and detachments. State who or what and effective time.

b **M**ission. (Read twice) A brief statement of who, what, when, where, and why. Must also state whether mission or time has priority.

c **E**xecution.

1 Commanders Intent.

2 Concept of Operation. A statement of the overall scheme of maneuver of the operation from start to finish is given.

3 Sub-unit missions. During movement and actions on the objective.

4 Detailed instructions.

a Formations and order of movement

b Primary and alternate patrol route.

c Procedures for departure and reentry of friendly lines.

d Actions at danger areas and procedures for crossing danger areas.

e Actions on enemy contact. I/A drills

f Rally points and actions at rally points.

g Actions in the objective area.

h Fire support plan.

5 Coordinating Instructions. Contains instructions common to two or more elements/teams, coordinating details and control measures objective area. applicable to the patrol as a whole, and time or conditions when order is to be executed.

a Time of departure/time of return.

b Rehearsals/briefback.

c Inspections.

d Debriefing.

e Priority Intelligence Requirements (PIR).

f Annexes. Actions not normally included in other parts of the order, such as stream crossings, aerial insert/extract, resupply and rough terrain procedures.

(d) **A**dministration and Logistics. This would include rations, food and water, equipment and method of handling WIA, KIA, and EPW's. **(5 S's: Search, Silence, Segregate, Safeguard, & Speed)**

(e) **C**ommand and Signal.

(1) Signal.

(a) Signals to be used within the patrol. Standing signals are hand and arm, pyro and audible.

(b) Communication with higher headquarters. Radio frequencies and call signs, time to report and special codes to be used are disseminated.

(2) Command Relationships.

(a) When operating with other services, to include foreign services, assignment of senior man must be determined.

(3) Chain of Command.

(4) Location of Leaders. During movement, in danger areas, and at the objective. End the patrol order with a time check.

k. The eleventh patrol step is "supervise, inspect, and rehearse."

l. The twelfth patrol step is "execute the mission." The first eleven patrol steps are oriented towards reaching this goal.

10. RECONNAISSANCE OPERATIONS. Reconnaissance operations vary within the operational environment and depend on the assigned mission, size, type and composition of the reconnaissance element.

a. Fundamentals of Reconnaissance. Ground reconnaissance operations are performed in conformance with the following fundamentals:

(1) Orient on the location or movement of the intelligence objectives. Units engaged in reconnaissance operations maneuver according to location or movement of the intelligence objective.

(2) Report All Information Accurately. To be of value, reconnaissance reports must be complete, timely, and accurate.

(3) Avoid Decisive Engagement. The reconnaissance mission must not be jeopardized by unnecessary combat and is most effective when undetected.

(4) Develop the Situation (RAPIDLY). You would deploy and report, reconnoiter, choose a course of action, make the report.

(5) Debrief the Reconnaissance Patrol. Upon return of the patrol, the commander receives the report(s) at a debriefing attended by the reconnaissance leader and all recon members. Necessary information is given with the commander’s needs and patrol’s mission in mind. The debriefing should be conducted as soon as possible following the patrol's return, while information is still fresh in the minds of the patrol members.

b. Types of Reconnaissance Missions. There are three types of ground reconnaissance mission:

(1) Route reconnaissance: Is directed in order to obtain information on routes. Obstacles including chemical or radiological contamination, route conditions, and critical terrain and man-made features along a specific route.

Techniques used are less time consuming, performed more rapidly and use less qualified personnel than other types of reconnaissance.

(2) Zone reconnaissance: Is used to gather information within a zone establish be defined lateral boundaries, (i. e. corridor). It may include but is not limited to information about all routes, obstacles, key terrain and chemical or radiological contamination. This type is used when enemy location is unknown or in doubt.

(3) Area/Point reconnaissance: Is a directed effort to obtain specific and detailed information within any clearly defined area with specified limits of advance, (i.e. a "box"). It may include, but is not limited to routes, obstacles, chemical or radiological contamination, minefields, breach sites, enemy emplacements, and enemy forces.

c. Techniques of Reconnaissance:

(1) Reconnaissance in force. Is a limited objective offensive operation by a considerable force to discover and test the enemy's disposition and strength. Route reconnaissance teams are often included in reconnaissance in force operations.

(2) Reconnaissance of Suspect Area. Areas along a route which are likely to be defended by enemy detachments. Approach routes are checked for mines, , and signs of ambush. Detailed observation proceeds actual reconnaissance.

(3) Reconnaissance by Fire. Is accomplished by firing on likely or suspected enemy positions in an attempt to remove camouflage and cause an undisciplined enemy to disclose his presence by movement or return fire. Engineer reconnaissance teams may use this type of reconnaissance when time is critical and the loss of surprise is not critical.

(4) Reconnaissance at Night. Night reconnaissance is limited usually to electronic surveillance devices, observation of routes, and use of listening posts. This type of reconnaissance is slower and less effective.

(5) Reconnaissance by Aircraft. Normally employed in fluid situations to obtain general information concerning enemy movements and locations, and the conditions of roads, bridges, airfields, terrain features, and waterways, both enemy and friendly. Reports from photographs provide information on the condition, type, classification, length, width, and construction material of bridges; and information about fording sites, bypasses, and obstacles. Aerial photographic reconnaissance is used to deny or confirm information obtain by visual reconnaissance or other means.

11. REFERENCE MATERIAL

a. FM 5-36 (Route Reconnaissance And Classification) This manual describes intelligence aspects, fundamentals of Route/Road Reconnaissance, methods of reconnoitering and classifying routes for military use. Also

included are procedures for electrical transmission of engineer reconnaissance information and procedures for filling in engineer reconnaissance forms.

b. FM 5-34, (Engineer Field Data). The "Engineer Bible" is one of the most sought after books. It holds formulas and formats for most engineer data.

c. GTA 5-2-5 (Engineer Reconnaissance Card). It is an excerpt from FM 5-36 used for training.

12. ROUTE RECONNAISSANCE. The ability to carry out a mission depends heavily upon available lines of communication, and in particular, the land routes. There are two types of route reconnaissance:

a. Hasty Route Reconnaissance. Is conducted to determine the immediate military load classification of a specified route when time has priority.

(1) It is limited to critical terrain data necessary for route classification.

(2) The route reconnaissance overlay is accurate, clear, and concise.

b. Deliberate Route Reconnaissance. Is much greater in scope and is made when sufficient time and qualified personnel are available.

(1) Enclosures describe in detail each terrain feature covered by the report.

(2) It differs from hasty route reconnaissance reports only in the degree and completeness of reported information. Deliberate reconnaissance provides a thorough analysis and classification of significant information along a route and considers demolition and repair information that may be necessary.

c. Terrain Considerations. Terrain features are important in route reconnaissance and require consideration. Examples are:

(1) Existing routes and their physical characteristics.

(2) Gradients and radius of curvature.

(3) Bridges.

(4) Vehicular fording, ferrying.

(5) Tunnels, underpasses, and similar obstructions to traffic flow.

(6) Reinforcing obstacles (craters, minefields, road blocks, NBC).

(7) Rock falls and slide areas.

(8) Drainage.

(9) Other natural or man-made features such as wooded or built up areas that may impact movement.

d. Route Classification System. This is designed to assist in planning and executing military movement. Routes are classified according to the factors of minimum width, worst route type, least bridge military load classification and obstructions to traffic flow. (See GTA Card Pg. 8)

e. Route Types. For the purpose of classification, routes are designated by their ability to withstand the effects of weather. There are three types. (See GTA Card, pg. 8).

(1) Type X. All weather route is any route which with reasonable maintenance, is passable through the year to traffic never appreciably less than maximum capacity.

(2) Type Y. All weather route (limited traffic due to weather) is any route which with reasonable maintenance can be kept open in all weather, but sometimes less than maximum capacity. Bad weather could halt traffic, for a short time, on this type of road.

(3) Type Z. Fair weather route is any route which quickly becomes impassable in adverse weather and cannot be kept open by maintenance short of major construction. (See GTA Card, pg. 8).

f. Military Load Classification. (MLC) Considers vehicle weight and type and its effect on routes and bridges. (See GTA Card, pg. 10).

(1) The classification system is represented by whole numbers assigned to vehicles, bridges, and routes.

(2) Bridges and routes are assigned military load classifications based on their safe load capacity and physical dimensions.

(3) The lowest military load classification number regardless of vehicle type or conditions of traffic flow determines the military load classification of the entire route in question.

g. Obstruction to traffic flows. Route obstructions are factors which restrict the type, amount and speed of traffic flow. Obstructions to be reported on are indicated in the route classification formula by the abbreviation (OB). Examples of obstructions are:

(1) Overhead obstructions: Tunnels, underpasses, overhead wires, overhanging buildings, overhead clearance less than 4.3 meters (14 ft)

(2) Reduction in traveled way widths: Single flow 5.5 meters to 7.3 meters (18 to 24 ft), double flow over 7.3 meters (24 ft).

(3) Gradients (slopes) of 7 percent or greater.

(4) Curves with a radius of less than 25 meters (82 ft).

(5) Ferry and/or ford sites.

h. Special Conditions

(1) Snow blockage: Where snow blockage is regular, recurrent, and serious the classification symbol is (T).

(2) Flooding: Where flooding is regular, recurrent, and serious the classification formula is (W).

i. Route Classification Formula. (See GTA 5-2-5 Card, pg. 8). Is developed from notations expressed in the standardized sequence of, minimum traveled way width, route type, lowest military load classification, and obstructions if present.

(1) Example: 20 ft. Z 10 (OB). This describes a fair weather route with a minimum traveled way width of 20 feet and a military load classification of 10 with an obstruction.

(2) Student Problem #1 = 7m Y 50 (OB): A LIMITED ALL WEATHER ROUTE WITH A MINIMUM TRAVELED WAY OF 7 METERS, A MILITARY LOAD CLASSIFICATION OF 50, AND WITH OBSTRUCTION(S).

(3) Student Problem #2 - All weather route with a minimum traveled way width of 10.5 meters, a military load classification of 120 with a grade of 8 percent. 10.5m X 120 (OB)

13. ROAD RECONNAISSANCE: Road reconnaissance is conducted to determine the traffic capabilities of a particular road and to provide more detailed information than that needed for the route classification formula.

a. A road is an open way provided for the convenient passage of vehicles. Road reconnaissance is conducted to determine the traffic capabilities of a particular road and to provide more detailed information than that needed for the route classification formula. To determining the load-bearing capacity of roads, a basic knowledge of road structure and design (as outlined in FM 5-36 and TM 5-330) is desirable. A road usually consists of a pavement or surface, a base course, a subgrade, and a drainage system(s).

(1) Surfaces - The surface of a road is the top portion of the road structure. Surfaces are made of various materials; natural earth stabilized with oil, bituminous pavement, portland cement, concrete, brick, block and stone.

(2) Base Course and Subgrades - The base course of a road is the intermediate portion of the road. Base courses are usually made from gravel or crushed rock. The subgrade is the foundation. Roads usually have a subgrade made of locally available natural materials.

(3) Drainage Systems - Drainage systems remove surface water, intercepts and disposes of runoff from adjoining areas, and removes harmful groundwater from the road surface or subsurface areas. The entire serviceability of a road depends on the adequacy of the drainage system. In addition, drainage systems are targets for demolition. Reconnaissance personnel should therefore inspect the drainage system to report structures in

need of repair or debris which may clog the system and to check likely sites for prepared demolition or acts of sabotage. Components of drainage systems are open channels, embankments, culverts, and dips.

(a) Open channels or ditches are the simplest and most common method of handling surface water. Deep or wide ditches bordering roads are definite traffic hazards. These ditches may reduce the width of the traveled way and require posting with caution signs.

(b) Dikes, berms, or intercepting embankments are used along shoulders of high fill or along the tops of cut slopes to collect runoff. Such runoff may be directed into ditches or natural drainage courses to prevent the erosion of unstable slopes.

(c) Culverts are used under roads and air landing facilities to carry water that cannot be diverted to natural drainage channels by other means. Culverts are relatively short and conform generally to the grade and alignment of the open ditch, stream, or natural drainage course at the inlet and outlet ends. Culverts are particularly good demolition targets.

(d) Dips are portions of a road, normally paved, that may be used as fords for crossing shallow watercourses or washes in semi-arid regions subject to flash floods and in other locations where the construction of a bridge is impractical or too expensive.

b. Road Classification Formula: A series of numbers and symbols express the road classification formula in standardized order. The formula describes the worst section of a road. It is expressed as follows:

(1) The formula is prefixed by the letter "A" if there are no limiting characteristics and letter "B" if there is one or more limiting characteristic.

(2) Limiting characteristics: (On GTA Card, pg. 9.) Each characteristic has its own symbol.

Symbol c - curves with radius less than 25 meters (82 ft)
d - inadequate drainage
f - unstable foundation
g - gradients of 7% or more
j - excessive camber or super elevation
s - rough surface condition

Any unknown characteristic is represented by a question mark, for example: f-?.

(3) The minimum width of the traveled way is expressed in meters and is followed by a slash and the combined width of the traveled way and the shoulders (for example, 14/16m). A description of the shoulders is not reported as part of the formula but as a separate notation which specifies the surface of the shoulders (grass, gravel metaling), condition (unusable, emergency only, capable of improvements), width, vegetation, and critical side slopes. To report a dual road in which the two traveled ways are narrowly separated by a fixed barrier, turf in center, the width of each traveled way

is noted first and followed by the combined width including shoulder (for example 7 + 7/21m). If the two traveled ways are significantly divided, each is reported as a separate road.

(4) Next is the type of surface material. Road surface material is expressed by a letter symbol, see GTA Card, pg. 9, in the route classification formula.

(5) The road length in km may be shown in parentheses.

(6) Obstructions along a road are indicated by placing the symbol (OB) at the end of the formula. Details of obstructions affecting the traffic flow of a road are not shown in the formula but are reported separately by appropriate symbols on accompanying maps or overlays or on DA Form 1248 (Road Reconnaissance Report). Reportable obstructions are:

(a) Overhead clearance is less than 4.3 meters (14 feet).

(b) Reductions in Traveled way widths below standards (see GTA card table 3, page 12 or FM 5-36, page 2-4, table 2-1)

1 (OB) Whenever the traveled way width is reduced below the minimum standard for the type of traffic conditions, (less than 5.5 meters for single flow traffic and less than 7 meters for double flow traffic).

2 If type of vehicle is not known, use 8 meters (26 ft) as minimum width.

(c) Excessive grades. (OB) When gradient is 7% or greater.

(d) Sharp curves. (OB) Whenever the radius of curvature is less than or equal to 25 meters (82.5 ft).

(e) Fords & Ferries. (OB) When present.

(7) Special Conditions. If road blockage is regular, recurrent, and serious, the effects of snow blockage (T) and flooding (W) are indicated in the road classification formula.

(8) Example: B g s 4/5 l (OB). This formula describes a road with limiting characteristics of steep gradients and rough surface, a minimum traveled way of 4 meters, a combining width of 5 meters, gravel, or lightly metaled surface, and obstruction.

Student Problem. A road with a sharp curve, unknown foundation, a traveled way of 3.2 meters. It has a paving of brick on stone surface, 4.3 kilometers long, and there are signs of heavy snow. Classify this road using the road classification formula.

ANSWER: **B c (f?) 3.2m P (4.3km) (OB) (T)**

14. ROAD RECONNAISSANCE REPORT. DA Form 1248 provides the format required for road classification. When DA form's are not available, short forms or work sheets for field work, may be designed by the unit making the reconnaissance. During deliberate route reconnaissance, each road within the route will be classified and a DA Form 1248 will be completed.

a. The top part of the form consists of standard identification information.

b. Section I. Consists of general road information. Grid references, roadway width, reconnaissance date and time occurred, weather during reconnaissance, road marking, and length of road.

c. Section II. Consists of detailed road information. Alignment, drainage, foundation, surface, and type of surface. You simply check the appropriate blocks.

d. Section III. Obstructions (OB) in the road.

e. The mileage chart on the reverse side reads from the bottom up and is used to show the location of noticeable or prominent features along the road. You can use miles or kilometers to create a scale.

15. BRIDGE RECONNAISSANCE:

a. A bridge is a structure that carries a roadway or railway over a depression or obstacle. A bridge that is completely supported by its two abutments (end supports) is called a single-span bridge. A bridge that has one or more supports between the abutments is a multi-span bridge. From a military standpoint, bridges either already exist in an area of operations or must be constructed for military purposes during the course of a specific operation. Existing bridges vary in size and complexity, and it is these types of bridges that military engineers must most often reconnoiter and classify. Military bridges, on the other hand, which are usually constructed and classified by military engineers, include floating bridges, standard prefabricated bridges, and field-fabricated bridges.

b. Bridge Components: The main components of the bridge are the approaches, substructure, and the superstructure. The approaches (portions of a route leading to a bridge) are often constructed as either fills that rise to the bridge or cuts that slope down to the bridge. Approaches may be mined or booby trapped and, therefore, require thorough investigation during reconnaissance. The substructure (lower part) of a bridge consists of the abutments and intermediate supports that transfer the load of the bridge to the ground. The superstructure is the upper part of the bridge and consists of the components described below.

(1) Stringers rest on and span the distance between the intermediate supports or abutments. Stringers are the main load-carrying members of the superstructure. They receive the load from the flooring and transfer it to the substructure.

(2) The flooring system often consists of both decking and tread. The decking is laid directly over the stringers at right angles to the center line

of the bridge. The tread is laid parallel to the center line of the bridge and between the curbs. It acts to strengthen the structure and increase load bearing capacity as well as preventing traffic wear on the decking.

(3) Curbs are usually placed at both edges of the flooring to guide crossing vehicles. A vehicle with an a axle that is wider than the width of the road, will not fit between the curbs and cannot cross the bridge. Most bridges, however, allow for vehicular overhang beyond the wheels or tracks. This allowance is called horizontal clearance above the curbs.

(4) Railings along the bridge are built to guide drivers and to protect vehicular and foot traffic.

(5) Trusses are used in some bridge superstructures, either above or below the traveled way, to increase the load-carrying capacity. A truss is a structural element made of several members joined together to form a series of triangles.

c. Time and qualified personnel, (Engineers), need to be available for detailed analysis, or if the bridge is of a complicated design, more precise methods and better qualified personnel (SEA B'S or Civil Engineers) are used (for the methods see TM 5-312). A bridge reconnaissance must be done before the class of a bridge can be determined, measurements and other data that determine the classification of a bridge are taken and noted.

(1) The number of members in each span is noted, where applicable (stringer bridges and concrete T-beam bridges, for example). Exact and complete dimensions of specific bridge members are taken as outlined later in this lesson.

(2) The span length is measured from center-to-center of supports. The classification of the bridge is usually based on the critical (weakest) span, and if the weakest span is readily apparent, no other spans need be investigated. However, if the weakest span is difficult or impossible to locate by looking, all spans must be classified. Even if several spans look identical, actual measurements are taken to prevent error.

(3) The traveled way width is measured between the inside faces of the curbs. On a truss bridge, however, the horizontal clearance is measured from a point four feet above the roadway, but only one foot for other bridges.

(4) It is essential to note the general condition of the bridge, paying particular attention to evidence of damage from natural causes (rot and rust) or combat action. Classification procedures presume that a bridge is in good condition. If the bridge is in poor condition, the class obtained from mathematical computations must be reduced in accordance with the classifier's judgment.

(5) Additional Bridge Information: There are several items of bridge information which may be collected and recorded when possible.

(a) Approaches (limiting factors, minimum traveled way width, surface material, and obstructions) may be recorded.

(b) The geographical feature, which the bridge spans, and its width and depth may be recorded. If the crossing is over a water obstacle, additional information includes current conditions, width and depth at mean water level, tidal conditions, flood susceptibility, location of dams and locks, nature and slope of banks, and type stream bottom.

(c) Abutments, including foundation conditions, type and material of construction, and bearing areas, may be recorded (see TM 5-312 or FM 5-34).

(d) Intermediate supports may be recorded. This information could include foundation conditions, type and material of construction, bearing areas, height above ground or mean water level, horizontal clearance between supports at ground or mean water level, special design features such as ice breakers, and critical dimensions required for demolition or classification calculations (see TM 5-312 or FM 5-34).

(e) Bridge structure (including a detailed description of the type and material of construction, wearing surface, deck or flooring, and supporting members) may be recorded. Also included are capacity dimensions, where applicable (Table 11); engines and machinery for swing, lift, , and retractile bridges; supply, utility, or communication lines supported by the bridge; date of construction; and critical dimensions for demolition and calculation of military load classification (see TM 5-312 or FM 5-34).

(f) Repair information may be recorded. This information should include a description of the nature of repair or the reinforcement needed; an estimate of time , labor, and material required; availability of construction material nearby; and results to be expected from repairs or reinforcement (TM 5-312). Extensive repair information is recorded on DA Form 1711-R and attached to the Bridge Reconnaissance Report.

(g) Demolition information may be recorded. This should include a description of the demolition procedures planned and the expected effect, a description of any prior preparation, and an estimate of time, labor, and material required to execute the demolition (FM 5-250) (see target folders).

(h) Alternate crossing sites may be recorded. This could include data concerning the approaches, type of crossing (ferry, ford, or floating bridge), and estimate of the time, labor, and materials needed to construct alternate crossings.

16. Bridge Reconnaissance Report Form. DA Form 1249 is used for each bridge encountered.

(1) Standard information along the top of the form.

(2) The assigned serial number of the bridge is entered in Column 1. This number corresponds with the number used on the overlay.

(3) The bridge location is reported by means of Universal Transverse Mercator (UTM) grid coordinates in Column 2. Standard grid coordinates used on all ground military maps.

(4) Horizontal clearance is entered in Column 3. If unlimited clearance, put infinity symbol.

(5) Under bridge clearance is entered in Column 4. Both heights are listed in order; height between the underspan and stream bed, back slash, then the height between the underspan and the normal water depth.(12m/10m)

(6) The number of spans is listed in Column 5. Each span is listed, form the west to east. In the event a more westerly span cannot be determined, i.e. the bridge run due north/south, the spans are listed north to south in sequence

(7) Types of span construction are recorded by corrected number symbol in Column 6. The number symbol are listed on pg. 5-12 in FM 5-34 and pg. 6 of the GTA card 5-2-5 (Engineer Recon).

(8) The construction material of each span is recorded by letter symbols in Column 7. The symbols are found on pg. 5-13 in FM 5-34, and pg. 9 in GTA card 5-2-5.

(9) The length of each span is recorded in Column 8. This is the center to center distance between bearings, so the sum of all spans will not equal the overall length of the bridge. In this column place a "#" next to the length if the span is damage or unusable and/or a "W" next to the length if the span is over water.

(10) For additional bridge information add column as needed, or write on another paper/form.

(11) Bridge Sketches. Sketches on the back of DA Form 1249 show as much information as necessary. Several important details must be illustrated in the sketches:

(a) A side elevation (profile) shows general features of the bridge. This should include abutments, piers, spans, with their type and construction material indicated.

(b) The critical span (the span with the least load carrying capacity) should be sketched in cross-section. This is generally the longest span but this depends on the construction of the bridge, (number and size of stringers). Enough detail must be provided to compute military load classification.

(c) Cross sections of critical members should be sketched in detail. Enough detail must be provided to compute military load classification.

(d) Site plan sketch shows location, alignment, gap or obstacles spanned, dimensions, classification, gradient of approaches.

(e) Bridge photographs if possible.

17. RECONNAISSANCE FOR STREAM CROSSING OPERATIONS. Considerations for stream crossing ops. are depth, width, approaches, velocities, and natural, and man-made obstacles.

a. Stream depths are normally taken every three meters to provide warning for changes. Usually poles or weighted ropes work well for determining depth. Take into consideration high water marks that may indicate the depth of the stream in heavy rainfall or spring thaw. Sluggish streams may turn into raging river in a short notice, especially in tropical, mountain, or desert regions.

b. Stream width determined by compass.

(1) Take an azimuth from a point on the near shore and close to the water's edge to a point on the opposite shore.

(2) On the near shore, establish another point that is on a line and at a right angle (90) to the azimuth selected.

(3) The azimuth to the same point on the far shore is ± 45 degrees form the previous azimuth. Depending on if you travel 90 degrees to the left or right, will tell you to add or subtract the 45 degrees. (See GTA Card, pg. 14).

(4) Measure the distance between the two points on the near shore.

(5) This distance is equal to the distance across the stream.

c. Stream width by measuring the gap.

(1) Have a member of the reconnaissance team hold an end of a tape or rope on the near bank.

(2) Another member crosses to the opposite bank and pulls the tape tight.

(3) The length of tape that corresponds to the distance across the gap is measured.

(4) This method is particularly useful during darkness when lights are not allowed.

d. Current velocities vary in different parts of a stream. The current is slower near the shore and swifter in the main channel.

(1) To determine velocity of a stream, measure a distance along the river bank.

(2) Throw a light object that can float into the stream. Record the time required for the object to float the measured distance.

(3) The formula is measured distance in feet (or meters) divided by average time in seconds equals stream velocity in FPS (or MPS).

18. FORDS. A ford is a location in a water barrier where the current, bottom and approaches allow personnel and/or vehicles and other equipment to cross, where suspension systems remain in contact with the bottom. All fords are considered obstructions.

a. Fords are classified according to their crossing potential or trafficability for pedestrians or vehicles.

b. The composition of the stream bottom of a ford determines its trafficability. (See GTA Card, pg. 4).

c. Limited ford information is recorded on maps or overlays by means of symbols.

d. Ford reconnaissance report form: The following details should be entered on the ford reconnaissance report.

(1) Items 1-10: Enter all data which establishes positive identification of the ford.

(2) Item 11: Record the width and depth of the crossing and velocity of the stream. Low, mean, and high water data may be obtain from local records, talking to the locals, or estimated based on the terrain along the site.

(3) Items 12-17: Record composition of the stream bottom, composition and percent of slope of both approaches, usable width of approaches and any known hazards such as flash floods, quicksand, or floating debris.

(4) Item 18: Enter any other pertinent data not recorded elsewhere on the report.

(5) Items 19-20: Draw sketches of the ford showing both a profile and site plan.

(6) Ford signs are used to mark fords. The trace of the ford should also be marked, especially in low light conditions. (See GTA Card, pg. 4).

(7) Vehicle Swimming Operations are related to the ford reconnaissance, in that some fording sites may be to deep for fording but not deep enough for a ferry and should be annotated as such. Most details of ford reconnaissance apply to swimming operations (stream depth and bottom conditions, sandbars and other obstructions, and especially stream entrances and exits. The DA form 1251 and the format for electrically ford data are modified with the notation that the site is appropriate for Swimming vehicles only.

19. FERRIES. A floating vehicle whose construction varies widely and ranges from expedient rafts to ocean-going vessels. Propulsion may be by oars, cable, pulleys, poles, stream current, or by steam, gasoline, or diesel engines. Ferries are obstructions. Limiting features of a ferry site that

should be considered are the width of the water barrier, distance and time for the ferry to travel from one bank to bank and the water depth of both slips.

a. Desirable Site Characteristics:

(1) Current velocity between 0 and 1.6 meters per second.

(2) Banks which permit loading without a great deal of preparation.

(3) Approaches that permit easy access and exit.

(4) Strong natural holdfast.

(5) No shoals, sandbars, or snags.

(6) Sites clear of obstacles immediately downstream.

(7) Sites clear of mines and boobytraps.

(8) Enough depth to prevent grounding the raft or ferry during loading and unloading operations, or when crossing.

(9) Holding areas for vehicles awaiting passage.

(10) Limited ferry information is recorded on maps or overlays by means of symbols.

b. Ferry Reconnaissance Report Form (DA 1252).

(1) Items 1-11. Enter all information which identifies the ferry.

(2) Item 12. Enter limiting features which would affect ferry operations. Such as varying depths of water at high and low tide, effects of freezing temperatures, etc....

(3) Items 13-15. Record the depth of the stream or body of water at high/low tides, the crossing times and the length of the course.

(4) Item 16. Record the pertinent design features for the vessels used. Include number of each type, length, beam, max capacity, and draft.

(5) Item 17. Designate the geographic direction of each bank by circling the appropriate abbreviations (N, E, S, W), the dimensions and capacity of each slip, the conditions of any docking facilities and the types and conditions of approaches.

(6) Item 18. Enter facilities for transferring freight.

(7) Items 19-20. Draw a sketch showing the route alignment plan and two sketches showing terminal's accessibility on both sides of the crossing. Pay particular attention to record any obstructions.

20. SLOPES. The rise or fall of the ground is known as slope or gradient (grade).

a. Percent of Slope. The percent is the ratio of change in elevation (vertical distance to horizontal ground distance) multiplied by 100. (See GTA Card, pg. 14)

b. Large scale maps may be used to approximate the percent of slope.

(1) The difference in elevation between the top and bottom of the slope is found by reading the contour lines (check your contour interval) or spot elevation.

(2) The horizontal distance (usually road distance) is measured and converted to the same unit of measurement as the elevation interval.

(3) The vertical and horizontal distance are substituted in the percent of slope formula and the percent of slope is computed. **This method is not suitable where cuts and fills have been used to reduce the gradient.**

V X 100 = % of slope
H

c. Line of sight and pace is a quick method of estimating the percent of slope. See example and pg.3-3 FM 5-36.

(1) The eye level of the average man is 1.75 meters (5 feet, 7 inches) above ground.

(2) The pace of the average man is .75 meters (30 inches).

(3) Vertical distance is then computed by multiplying the number of eye level height.(If it takes two eye level heights to get to the top of the slope, than: 2 eye level height x 1.75m = 3.5m)

(4) Horizontal distance is computed by totaling the number of paces and converting the meters by multiplying by the factor .75, (If it takes a total of 200 paces to travel to the top of the slope, than: 200 x .75m = 150m).

d. Slope Reconnaissance Symbols. Most vehicles that must negotiate slopes of 7 percent or greater for any significant distance will be slowed down. (See GTA Card, pg. 3).

21. CURVES: The speed at which a vehicle can move along a route is affected by sharp curves. A radius curvature of 25 meters (82.5 feet) or less is an obstruction.

a. There are several ways to measure curves. The easiest method is:

(1) Radius of a curve based on the formula
(see fig.3-8, pg.3-7, FM 5-36)

$$R = \frac{C^2}{8M} + \frac{M}{2}$$

Where R = radius of the circle

C = distance from the centerline of road to the center line of the road at the extremities of the curve.

M = perpendicular distance from center of tape to centerline of road

(2) If c is fixed at a constant of 2 meters, the formula is much easier to calculate.

Example: **R** = $\frac{15^2}{2}$ + $\frac{2}{}$ = 14.06 + 1 = 15.06 **R** = 15

(3) The result of calculation would be placed in the route classification formula.

(4) Curve symbols: (See GTA Card, pg. 3).

NOTE: Any radius less than or equal to 25 meters is an obstruction. Any radius between 25.1m and 45m are reportable but not considered obstructions.

22. TUNNELS: Tunnels are underground galleries or section of road that has been artificially covered for the passage of a route. Tunnel reconnaissance determines essential information such as serial number, location, type, length, width including sidewalks, alignment, gradient, and cross section.

a. Common shapes of tunnel bores are:

(1) Square with arch ceiling.

(2) Elliptical

(3) Horseshoe

(4) Semicircular

b. Tunnel reconnaissance symbol is recorded on maps or overlays. The tunnel entrance is shown on the map or overlay by an arrow from the symbol to the location of the entrance.

c. The width of the traveled way is shown in meters and is placed below the symbol.

d. Overhead clearances is the least distance between the surface of the traveled way and any obstruction vertically above it. Minimum and maximum overhead clearance is shown in meters to the left of the symbol.

e. Tunnel reconnaissance report form DA 1250:

(1) 1 - 11. Enter all information which identifies the tunnel.

(2) 12 - 17. Enter overall tunnel dimensions.

(3) 18 - 21. Enter the type of lining material, portal material, type of ventilation, and drainage means.

(4) 22 - 29. Enter bypass possibilities, gradient, and passability of approaches, in tunnel restrictions such as curves, any geological information pertinent to maintenance, improvement, or safety.

(5) 30 - 32. Draw a plan, profile, portal view, and a cross section of the bore.

(6) 33. Enter any pertinent information not mentioned above and attach appropriate photographs, if available.

23. ENGINEER RECONNAISSANCE. Is terrain reconnaissance conducted to support engineer activities. General engineer reconnaissance gathers engineer information of a **broad** nature within the operational area to locate and evaluate items, such as construction material, resources, and terrain features, that have engineer implications. General reconnaissance missions may be assigned on a zone, area, or route basis. To ensure that important engineer aspects are not overlooked, a checklist is recommended. A copy of the check list is located in FM 5-34 pg 5-17, and FM 5-36, pg 7-2.

a. Engineer Reconnaissance Checklist. Consists of the following:

(1) Roads. Classify using symbols.

(2) Bridges, fords, and ferries. Classify using symbols.

(3) Obstacles to movement. Report natural or artificial.

(4) Terrain, nature ridge system, drainage, swamps, forest.

(5) Engineer materials, road material, bridge timber, lumber, steel, concrete

(6) Engineer equipment, sawmills, machine shops, garages.

(7) Errors and omissions on maps used.

(8) Water points. Recommend location.

(9) Barriers to enemy movement. Natural or artificial barriers.

(10) Streams. Description of width, depth, banks, approaches.

(11) Defensive positions.

(12) Bivouac areas. Give data on soil, drainage, entrances, concealment.

(13) Utilities, water sewage, electricity, gas utilities.

(14) Construction sites, access, earthwork, acreage, power source.

(15) Ports, cargo handling facilities, storage transportation routes.

(16) Railways, switching stations, off-load capabilities, storage.

(17) Airfields, tower facilities, length of runway , condition of strip.

b. The location of important terrain features is shown on the reconnaissance overlay by conventional military, topographic, and reconnaissance symbols. (See GTA Card, pg. 7).

c. Engineer Reconnaissance Report (DA 1711-R Form) is used to report on engineer activities. (See GTA Card, pg. 1).

(1) The heading. Contains self-explanatory information that identifies who conducted the reconnaissance.

(2) The key. References the item of the report and its corresponding location on the reconnaissance overlay.

(3) The object. To be explained. Is shown in this column by conventional symbol or brief, written description.

(4) If a work estimate is included as part of the report, enter YES; if not, enter NO.

(5) In the additional remarks column: Report the location of the object by grid coordinates followed by explanatory remarks, calculations, and appropriate sketch.

(6) The work estimate. On the reverse side, is used to indicate the amount and type of engineer effort required for construction or repair.

24. OVERLAYS

a. An overlay is a clear sheet of plastic or transparent paper. Information is plotted on it at the same scale as on the map, aerial photograph, or other graphic. When the overlay is placed over one of these, the details plotted on the overlay are shown in their true position.

b. Overlays are used to display military operations with enemy and friendly troop dispositions, and as supplements to orders sent to the field. They show detail that will aid in understanding the orders, displays of communication networks, and so forth. They are also used as annexes to reports made in the field because they can clarify matters that are difficult to explain clearly in writing.

c. Route Reconnaissance Overlays - The route reconnaissance overlay is an accurate and concise report of the conditions affecting traffic flow along a specified route and is the preferred method of preparing a route reconnaissance report. An overlay normally satisfies the requirements of a hasty route reconnaissance. If more detail is required to support the reconnaissance, the overlay is supplemented with written reports describing critical route characteristics in more detail.

d. Preparation of a overlay. There are three steps in making a map overlay; orienting the overlay material, plotting and symbolizing the detail, and adding the required marginal information.

(1) Orienting the overlay

(a) Orient the overlay over the place on the map to be annotated. Then, if possible, attach it to the edges of the map with tape.

(b) Trace the grid intersections nearest the two opposite corners of the overlay and label each with the proper grid coordinates. These register marks show the receiver of the overlay exactly where it fits on his map, without them, the overlay is difficult to orient. It is imperative that absolute accuracy be maintained in plotting the cross hairs, as the smallest mistake will throw off the overlay.

(2) Plotting detail.

(a) Colored pencils or markers in standard colors are used when available to plot any detail (Field Manual 101-5-1). Otherwise plot the positions of the activities or other information you wish to show with a pen or pencil that makes a lasting mark without cutting the overlay. Use standard topographic or military symbols where possible. Nonstandard symbols invented by the author must be identified in a legend on the overlay. Depending on the conditions under which the overlay is made, it may be advisable to plot the positions first on the map, then trace them onto the overlay. Since the overlay is to be used as a supplement to orders or reports and the recipient will have an identical map, show only that detail with which the report is directly concerned.

(b) If you have observed any topographic or cultural features that are not shown on the map, such as a new road or a destroyed bridge, plot the positions as accurately as possible on the overlay and mark with the standard topographic symbol.

(c) If difficulty in seeing through the overlay material is encountered while plotting or tracing detail, lift the overlay from time to time to check orientation of information being added.

(3) Recording marginal information - When all required detail has been plotted or traced on the overly, print information as close to the lower right-hand corner as detail permits. This information includes the following data.

(a) Title and objective - This tells the reader why the overlay was made and may also give the actual location. For example, "Road Reconnaissance" is not as specific as "Route 146 Road Reconnaissance."

(b) Time and date - Any overlay should contain the latest possible information. An overlay received in time is very valuable to the planning staff and may affect the entire situation; an overlay that has been delayed for any reason may be of little use. Therefore, the exact time the information was obtained aids the receivers in determining its reliability and usefulness.

(c) Map reference - The sheet name, sheet number, map series number, and scale must be included. If the reader does not have the map used for the overlay, this provides the information necessary to obtain it.

(d) Author - The name, rank, **SSN**, and organization of the author, supplemented with a date and time of preparation of the overlay, tells the reader if there was a time difference between when the information was obtained and when it was reported.

(e) Legend - If it is necessary to invent nonstandard symbols to show the required information, the legend must show what these symbols mean.

(f) Security classification - This must correspond to the highest classification of either the map or the information placed on the overlay. If the information and map are unclassified, this shall be so stated. The locations of the classification are, top center, bottom center, and near the marginal information block, of the overlay.

(g) Additional information - Any other information that amplifies the overlay shall also be included. Make it as brief as possible.

References:

FM 5-34
FMFM 6-7
FM 5-36
FM 101-5-1
TM 5-312
GTA 5-2-5

UNITED STATES MARINE CORPS
COMBAT ENGINEER INSTRUCTION COMPANY
MARINE CORPS ENGINEER SCHOOL
PSC BOX 20069
CAMP LEJEUNE, NORTH CAROLINA 28542-0069

C-23D03
5 June 00
(95 POI)

STUDENT HANDOUT

BRIDGE AND ROAD CLASSIFICATION

1. PURPOSE: The purpose of this lesson is to provide you the student on expedient way of classifying routes and bridges to ensure mobility is sustained in the theater of operations.

2. LEARNING OBJECTIVE(S):

a. TERMINAL LEARNING OBJECTIVE(S): Provided a mission, a bridge or a completed Bridge Reconnaissance Report (DA Form 1249) a road or a completed Road Reconnaissance Report (DA Form 1248), and FM 5-34, expediently classify the bridge and road in accordance with FM 5-36, FM 5-446. (1371.2.16)

BODY:

1. ROAD CLASSIFICATION: A wheel vehicle effects a road more than a track vehicle. A track vehicle is about 18"-24" wide, 14' long. The weight is spread loaded evenly. A wheel vehicle each wheel effects the road. A bouncing effect.

a. Road Capacity: The load-bearing capacity of a road is its ability to support traffic and is expressed by a Military Load Classification number (MLC). Road classification for tracked vehicles is usually not assigned. Other factors, such as wear and tear on road surfaces by track action, determine the road's capability to support tracked vehicles. If the military load classification of the road is greater than the classification of the weakest bridge on a route, the bridge classification determines the capacity of the route. What we are concern with is the surface or wearing course.

b. Road Capacity Computations: Computation of the approximate load-bearing capacity of a road with a flexible surface for wheeled vehicles is made by measuring the thickness of the surface and base course and by determining the type of subgrade material. When this information has been found, the military load classification of the road may be estimated by referring to Tables 5-1, 2, 3, and Figure 5-2. The accuracy of this method depends upon the experience and judgment of those conducting the reconnaissance. The California Bearing Ratio (CBR) is used to compute the load-bearing capacity of a road. The CBR is a measure of the shearing resistance of soil under controlled density and moisture conditions (Table 5-2). It is expressed as a ratio of the unit load required to force a piston into the soil to the unit load required to force the same piston the same depth into standard crushed stone. An example computation of the load-bearing capacity of a road with flexible surface follows.

c. Shearing Resistance: A force causing two contacting parts of layers to slide upon each other, in opposite directions parallel to the plane of their contact. Soil test kit - 4' x 4' hole to determine the base course and subgrade.

(1) By field inspection, it is determined that a road has an 6-inch compacted gravel base course and a flexible 5-inch bituminous surface for a combined thickness of 11 inches. By using the soil identification method explained in Table 5-1, it is figured that the subgrade consists of clayey silts with low plasticity. (See page 5-2, FM 5-36)

(2) Clayey silts with low plasticity are shown in Table 5-2, to be in the ML range of soil groupings and to have a safe CBR between 5 to 15 or an average value of 10. Average by adding 5 + 15 and dividing by 2, CBR if 10. (See page 5-3, FM 5-36)

(3) Figure 5-2, shows that an 11-inch combined thickness of flexible surface and base course and a subgrade CBR value of 10 has a permissible wheel load of approximately 13,000 pounds. (See page 5-5, Figure 5-2, FM 5-36)

(4) Table 5-3, shows that this load corresponds to a military load classification of about 28. The road is, therefore, assigned a military load classification of 28. Since the maximum allowable single-wheel load of all vehicle classes from 50 to 120 inclusive is the same (20,000 pounds), the load classification of a road capable of supporting this single-wheel load cannot be immediately determined. In such cases, a determination of the single-axle load which the road can carry must be known or found. If maximum single wheel load falls between two numbers, take the average of the higher and lower vehicle class number add together, divide by 2. (See page 5-4, Table 5-3, FM 5-36)

2. BRIDGE CLASSIFICATION:

a. Classifications Systems: Bridge reconnaissance requires a general knowledge of the vehicle military load classification system, and bridge military load classification system, so these elements are discussed before bridge reconnaissance procedures. The bridge and vehicle classification system complies with NATO standardization agreements and provides a way in which a driver can determine whether or not his vehicle can safely cross a specific bridge. The purpose of the system is to protect the bridge, vehicle, load, and driver.

Typical Single-Lane Bridge Classification Sign

Typical Two-Lane Bridge Classification Sign

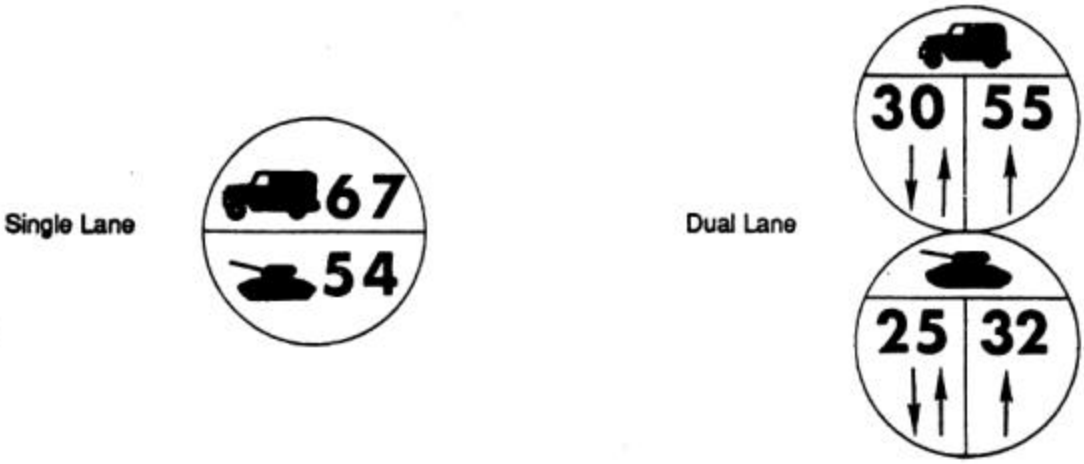

Typical Dual-Classification Bridge Signs

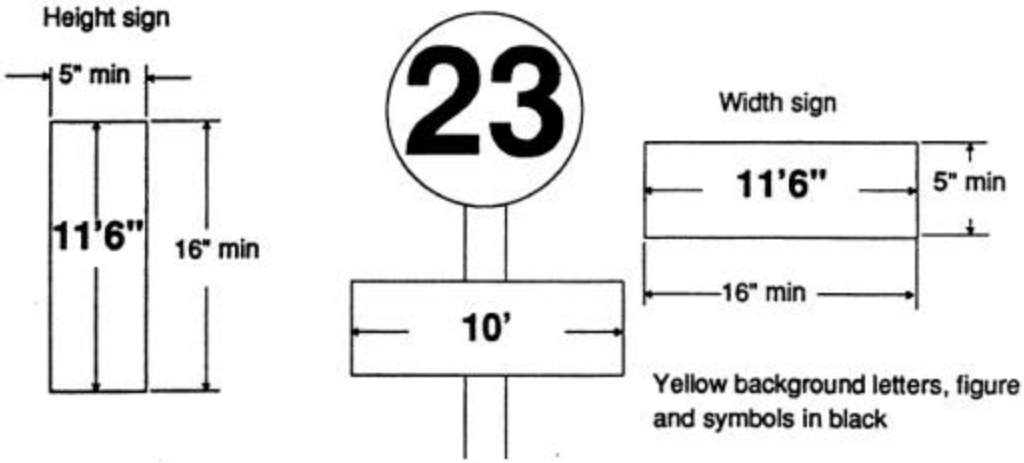

Width and Height Signs

b. <u>Vehicle Military Load Classification:</u> Most military vehicles display a vehicle classification sign. This classification number represents the effect a crossing vehicle has on a bridge. The driver compares the vehicle classification number with the bridge classification number. If the vehicle classification number is equal to or less than the bridge classification number, the vehicle can make a normal crossing. All self-propelled vehicles in military use that has a gross weight greater than 3 tons must have a

classification number. The mathematical computation of a vehicle's military load classification is beyond the capability of route reconnaissance teams. (For more details see FM 5-446,pg C-22,pg C-23.

(1) Compare the unclassified vehicle to a known vehicle having similar wheel and axle loadings and wheel spacings. Use Figure C-1 pg c-13 FM 5-446 or FM-5-36 to assign a temporary class number.

(2) Assign a temporary class number. Estimate the gross vehicle weight from the ground contact area and pressure of the tires. To do this use the following procedure:

(a) Figure the gross vehicle weight for all tires of the same size as--

$$w = \frac{A_c p_t N}{1{,}000}$$

where--

w = estimated gross vehicle weight for all tires of the same size, in kips.
A_c = ground contact area of each tire, in square inches.
P_t = tire pressure of each tire, in psi.
N = number of tires of the same size.

If you cannot directly measure the tire pressure, use the maximum allowable pressure printed on the side of the tire or on the vehicle's data plate.

(b) Total the estimate gross vehicle weight for all tires. For example, an unclassified wheeled vehicle has the following ground contact areas and tire pressures:

-Two front wheels, each with a ground contact area of 42 square inches and tire pressure of 72 psi.
-Eight rear wheels, each with a ground contact area of 34 square inches and tire pressure of 74 psi.

Therefore

$$w = \frac{A_c P_t N}{1{,}000}$$

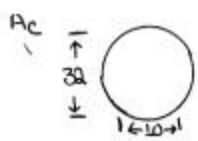

$$w = \frac{42(72)2}{1{,}000} + \frac{34(74)8}{1{,}000} = 26.18 \text{ kips}$$

The temporary class is equal to 42.5 percent of the gross vehicle weight, in kips.

MLC = 0.425*w*

MLC = 0.425(26.18) = 11.13 *or* 11

where--

MLC = temporary military load classification for a wheeled-vehicle.
w = estimated gross vehicle weight, in kips

b. Tracked Vehicles. for expedient classification of tracked vehicles, use one of the following methods.

(1) Compare the ground contact area of the unclassified tracked vehicle with that of a known or an appropriate hypothetical vehicle. Use figure C-1 or FM 5-36 to obtain a temporary class number.

(2) Assume that tracked vehicles weigh 2 kips per square foot of ground contact area (most heavy vehicles weight slightly less than this). The MLC is equal to the total ground area, in square feet, which is about twice the gross weight in kips. The total ground contact area of the tracks is--

$$A_c = \frac{2bL}{144}$$

where--

A_c = total ground contact area of the tracks, in square feet.
b = track width, in inches.
L = track length, in inches.

c. Nonstandard Combinations. Temporarily classify nonstandard combinations, such as two single vehicles traveling less than 100 feet apart or one vehicle towing another. Change the lead vehicle's front sign, if necessary, to reflect the combination class. A *C* above the numerals indicates that the number represents a combination class. Determine the temporary classification as follow:

--If the sum of the MLC's of the lead and trailing vehicles is less than or equal to 60, the MLC's is 90 percent of the sum of the MLC's.

--If the sum of the MLC's of the lead and trailing vehicles is greater than 60, the MLC is equal to the sum of the MLC's.

d. Adjustment for Other-Than-Rated Load. Temporarily classify overloaded or under loaded vehicles by adding or subtracting the weight difference in kips from the normally assigned design load. For example, a 5-ton dump truck with a maximum load has an MLC of 20. With an 8-ton load, the MLC is 23 (Figure C-7 pg-24 FM 5-446). Change the front sign to show the overload class.

3. Vehicle Classification Signs.

a. Categories. Vehicles are divided into two categories, single and combination, for classification purposes.

(1)Single Vehicles. A single vehicle has only one frame or chassis. Examples are trucks, tanks, trailers, and gun carriages. Single vehicles are assigned a class number rounded up to the nearest whole number. All vehicles except trailers have front signs to show their classifications when loaded to

rated capacity. For unloaded or overloaded vehicles, adjust the front sign to show the actual load classification.

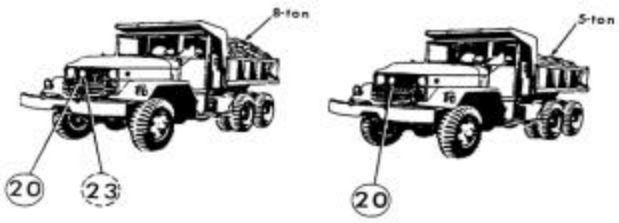

Figure C-7. Example Nonstandard Load Classification

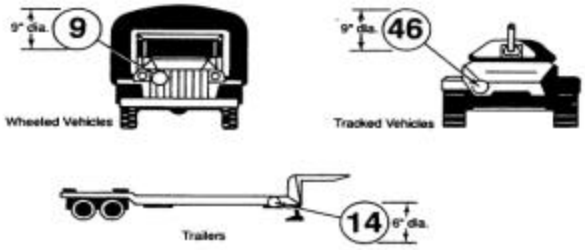

Classification Markings for Single Vehicles

(2) Combination Vehicles. A combination vehicle is two or more single vehicles operating as one unit, such as prime movers pulling semitrailers. One vehicle towing another less than 100 feet behind is also a combination vehicle (nonstandard). The sign on the front of the combination vehicle (towing vehicle or prime mover) has the letter *C* above the classification number of the combination.

b. Shape, Color, and Size. Both front and side signs are circular and marked in contrasting colors consistent with camouflage requirements. Black figures on a yellow background are normally used. Front signs are 9 inches in diameter and side signs are 6 inches in diameter. Figures are as large as the sign allows.

c.Location. Place or paint front signs on or above the bumper, below the driver's line of vision. When possible, place it on the right front (passenger side) of the vehicle. Place or paint side signs on the right side of the vehicle facing outward.

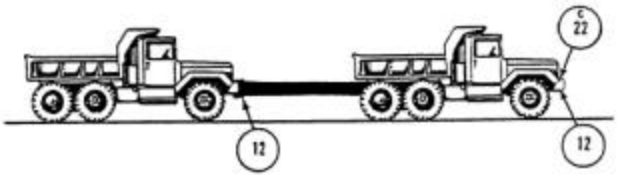

Classification Marking of Nonstandard Combination Vehicles

d. Bridge Military Load Classification: A mobile army must make maximum use of existing bridges, but before any existing bridge can be used to capacity, it needs to be classified in terms of the bridge and military load classification system that has been adopted by the US and allied nations. The class of each bridge indicates the carrying capacity of the bridge and is posted to prevent overloading that may cause failure and hamper future operations. To classify bridges, various methods are available, however, this

outline limits discussion to only one of these methods, the GTA 5-7-13 (Bridge Classification Card). For more detailed bridge classifications, see FM 5-446.

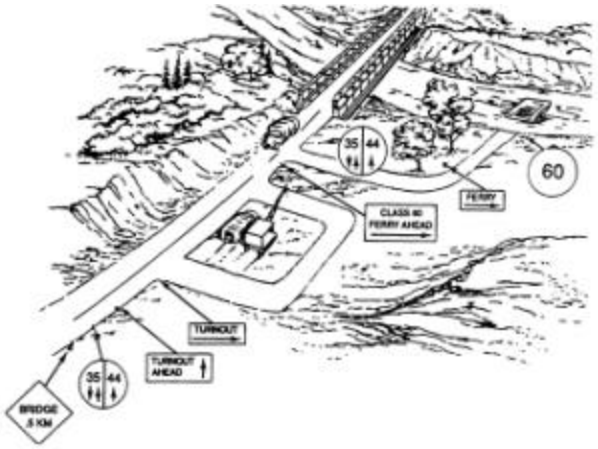

Standard Bridge Signs and Supplementary Signs

e. Special Crossings. Under exceptional conditions, the theater commander may authorize vehicles to cross bridges when the bridge classification number is less than the vehicle classification number. These special crossings carry restrictions on vehicle speed and spacing. Special crossings are limited to caution and risk crossings and are not posted on standard bridge signs.

(1) Caution Crossings. Obtain the caution classification for nonstandard, fixed bridges by multiplying the normal one-way class number by 125%. Obtain the caution classification from the published data for standard prefabricated, fixed, and floating bridges. Table outlines restrictions.

NOTE: CONSIDER AFCS BRIDGES AS NONSTANDARD FOR PURPOSES OF SPECIAL CROSSINGS.

(2) Risk Crossings. Obtain risk classifications from the published data for standard fixed and floating bridges. Risk crossings are not made on nonstandard, fixed bridges. These crossings are made only in emergencies when authorized by the responsible commanders. Table 5-1 outlines restriction on travel under risk conditions. A qualified engineer officer must inspect the bridge for signs of failure after each risk crossing. Damaged parts must be replaced or repaired before the bridge is reopened.

Table 5-1. Special-Crossing Considerations

Considerations	Type of Crossing		
	Normal	Caution	Risk
Classification	As posted	Standard bridges: as published Nonstandard bridges: 125 percent of normal one-way classification	Standard bridges: as published Nonstandard bridges: no crossing
Spacing	100 feet	150 feet	One vehicle on bridge at a time
Speed	25 mph	8 mph	3 mph
Location	In lane	Bridge centerline	Bridge centerline
Other	None	No stopping, breaking, or acceleration	No stopping, breaking, or acceleration Inspect bridge after each crossing

d. Bridge Classification Card: Bridges can be classified quickly by using the Bridge Classification Card (GTA 5-7-13). The card uses a partially graphic method to simplify classification procedures. The card outlines procedures for determining the class of simple steel and timber stringers, masonry arch, concrete T-beam, and concrete slab bridges. Bridge classification with this card is based on the superstructure only since this is considered to be the controlling feature in classification. A balanced design in the substructure is assumed. The bridge classification card is based on many assumptions in arriving at a bridge military load classification. This method is a way to estimate the military load classification of simple structure bridges under field conditions. When time and qualified personnel are available to provide a more detailed analysis, or if the bridge is a complicated design, more precise methods are used (FM 5-446). Before the class of a bridge can be determined, measurements and other data that determine the class of the bridge are taken and noted.

e. Shear Stress: Shear forces act very much like a pair of scissors cutting a piece of paper. When forces of equal magnitude and opposite direction act on a member, internal shear forces are generated as a reaction to external loads see fiqure below. Shear failures in stringers usually occur close to the supports in members less than 20 ft long. The formula to calculate shear stresses is also in the fiqure below.

$$f_v = \frac{V}{A} = \frac{lbs}{in^2}$$

Where V is by convention the sum of all vertical forces to the left of the section of interest.

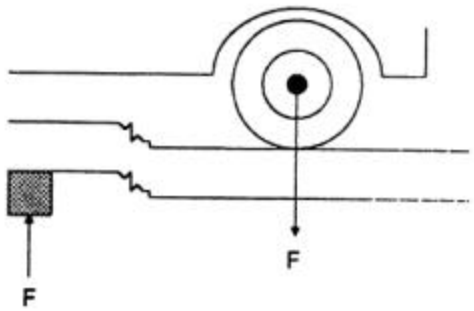

Shear Stress

f. Moment. Moment is the tendency of a body to rotate about an axis as a result of a force acting over a lever arm. Using a wrench to turn a bolt is a good example of moment; the longer the wrench, the less effort required to turn the bolt. Internal moment stresses are generated when members bend, such as when a stringer bends under the load of a vehicle. As shown in the figure below, compressive and tensile forces are generated inside the stringer as a result of an applied moment.

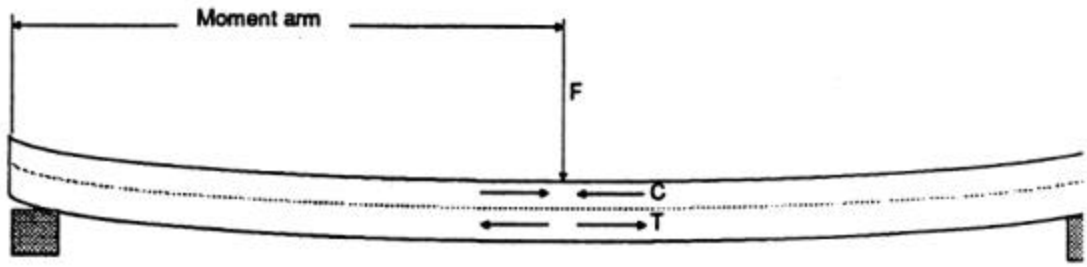

Moment (Bending Stress)

The property of a beam that measures the beam's ability to resist bending is called section modulus. Although expressed in units of volume, section modulus functions as an index of the member size, shape, and orientation with respect to the load. For example, of the two timber orientations shown in the figure below, the one to the left results in less deflection. This orientation is stronger and distributes the stress better because the compressive and tensile stresses generated by the moment in the beam are farther away from each other. Consequently, the section modulus of a stringer in the diagram to the left is greater than the section modulus of a stringer in the diagram to the right.

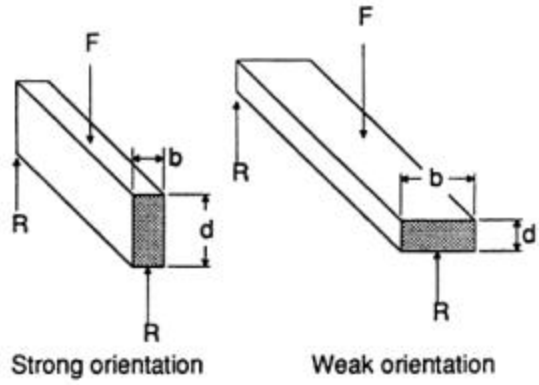

Stringer Orientations for Section Modulus

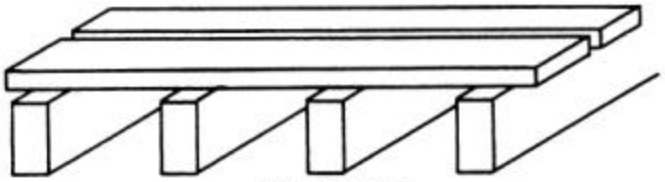

(1) Plank Decking

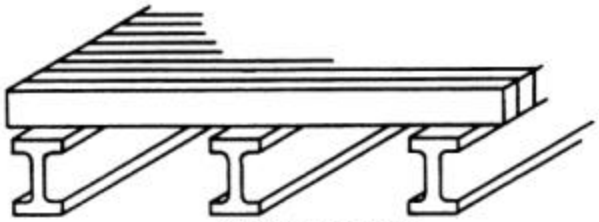

(2) Laminated Decking

Timber Decking

FACTS THAT AFFECT BRIDGE CLASSIFICATION

Superstructure. Consists of the stringer, flooring, curbing, walks, handrails, trusses and other components forming that part of the bridge above the substructure.

Substructure. Consists of the transverse supports for the superstructure. The substructure takes the load directly from the superstructure and transmits it to the ground.

Dead Load. Is assumed to be evenly distributed over the bridge and distributed equally to the main structural members. Dead load consist of:

a. The weight of the main structural members, such as stringers, girders or trusses.

b. The weight of the decking.

c. The weight of all accessories and hardware, such as curbs, handrails, bracing, nails and bolts.

Live Load. Any load not consistent in its application, as moving traffic, which a bridge or structure carries in addition to its own weight (vehicles, snow, ice).

Span Length. A portion of the superstructure between two supports, as the span increases, larger end reactions are delivered to the foundations and more substantial substructures become necessary.

Shearing Stress. A force causing two contacting parts or layers to slide upon each other in opposite direction parallel to the plane of their contact.

Traveled Way Width. Roadway width limits for maximum two way class, and/or one way width restriction. (See GTA 5-7-13)

Stringers. Rest on and span the distance between the intermediate supports or abutments. Stringers are the main load - carrying members of the superstructure; they receive the load from the flooring and transmit it to the substructure.

STUDENT EXERCISE: Enclosed are (5) five of the most common types of bridges that are encountered. The training information is set up step by step procedures for classification. Your references are the GTA 5-7-13 card and FM 5-446, if you are having problems or would like more information, see FM 5-446 (military fixed bridges). The information that you will be using in the sample problem(s) is given to you here in this text. In the future you will have to get this information from a bridge reconnaissance report, or other sources.

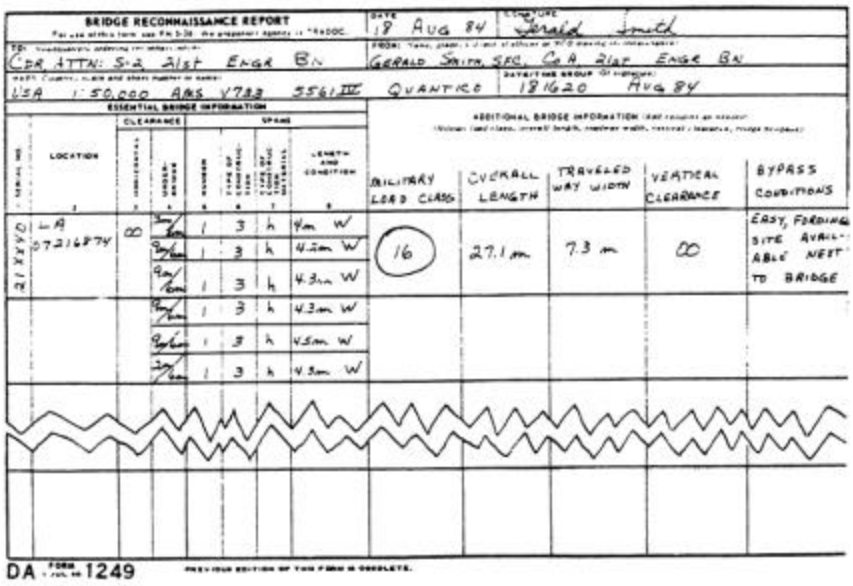

BRIDGE RECONNAISSANCE REPORT

DATE: 18 AUG 84 | SIGNATURE: Gerald Smith

TO: CDR, ATTN: S-2 21st ENGR BN | FROM: GERALD SMITH, SFC, Co A 21st ENGR BN

USA 1:50,000 AMS V733 5561 III QUANTICO | DATE/TIME GROUP: 181620 AUG 84

ESSENTIAL BRIDGE INFORMATION

SERIAL NO.	LOCATION	CLEARANCE		SPANS				ADDITIONAL BRIDGE INFORMATION				
							LENGTH AND CONDITION	MILITARY LOAD CLASS	OVERALL LENGTH	TRAVELED WAY WIDTH	VERTICAL CLEARANCE	BYPASS CONDITIONS
21XXXO	LA 07216874	∞	9m/6m	1	3	h	4m W	16	27.1 m	7.3 m	∞	EASY, FORDING SITE AVAILABLE NEXT TO BRIDGE
			9m/6m	1	3	h	4.2m W					
			9m/6m	1	3	h	4.3m W					
			9m/6m	1	3	h	4.3m W					
			9m/6m	1	3	h	4.5m W					
			9m/6m	1	3	h	4.3m W					

DA FORM 1249 PREVIOUS EDITION OF THIS FORM IS OBSOLETE.

Sample Bridge Reconnaissance report with an abbreviated bridge symbol

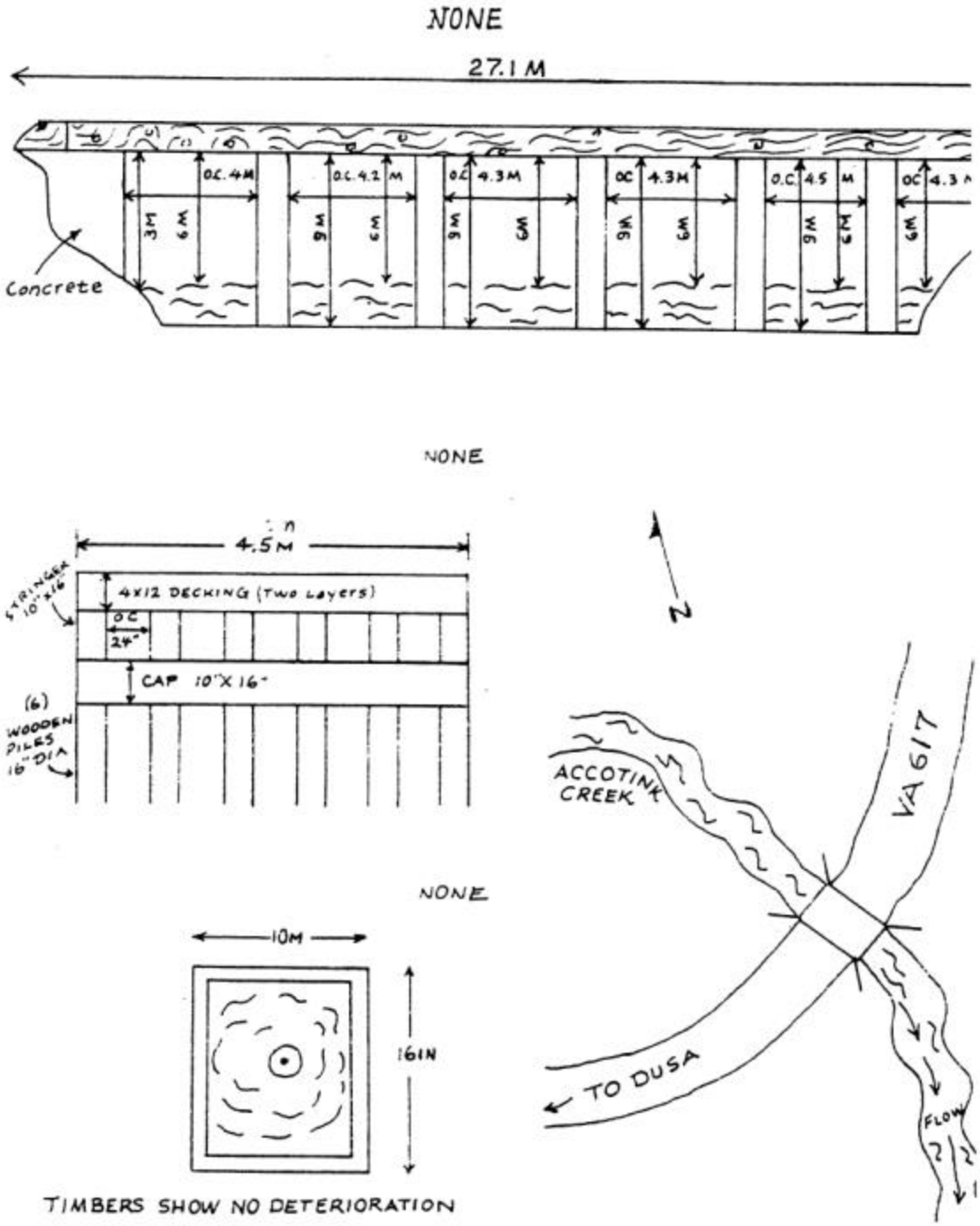

Sample bridge sketch on a Bridge Reconnaissance Report

DETERMINE THE MILITARY LOAD CLASSIFICATIONB OF A TIMBER TRESTLE BRIDGE

CONDITIONS

You are given a sample problem (less the military load classification), GTA 5-7-13, FM 5-446, and a directive to classify the bridge.

STANDARDS

You will determine the one- and two-way military load classifications for wheeled- and tracked-vehicles within ± three classes. Remember this is a hasty method of classification.

TRAINING

Sample Problem

1. Review the bridge reconnaissance report, and obtain the following information about the bridge, (sample problem);

a. Roadway width, curb to curb in feet (b_R). 18 feet

b. Critical span length, in feet (L). 23 feet

c. Type, size, and number of stringer (NS). 8 Timber stringers: 12 x 18 inches

d. Stringer Spacing(SS); 30 inches or 2.5 feet

e. Number of lateral braces(Nb). No lateral braces

f. Deck: Single-plank, Multilayer or Laminated 2 layers of 4 x 12 inch planks

g. Deck thickness (td_____, % lamination_____

NOTES:

(1) All necessary tables and figures are in your GTA 5-7-13.

(2) Carry out all calculations two places to the right of the decimal point and do not round up.

2. Determine the moment class of the bridge span.

a. Obtain the total moment capacity per stringer from Table 2.

m (moment capacity) = kip foot/stringer.

b. Determine the dead-load moment for the span (MDL) from Table 4.

NOTE: If L is not shown in the Table, add the higher and lower L and divide by 2 to determine the MDL.

c. Calculate the dead-load moment per stringer (mDL).

mDL = MDL

NS

d. Calculate the live-load moment capacity per stringer (mLL).

(1) Steel stringers.

$$mLL = \frac{m - mDL}{1.15}$$

(2) Timber stringers.

$$mLL = m - mDL$$

(3) Check the maximum span length (Lm) on tables 2 or 3 for excess deflection to obtain the safe live-load moment capacity per stringer.

NOTE: If L > Lm, multiply mLL by $\frac{Lm}{L}$

e. Calculate the effective number of stringers for one- and two-way traffic.

One-way $N1 = \frac{5}{SS} + 1$ DO NOT ROUND OFF

Two-way $N2 = 3/8\ (NS)$ DO NOT ROUND OFF

NOTE: Calculate N2 only if the bR $\geq$ 18 because the bridge will have a two-way class.

f. Calculate the live-load moment per lane (MLL) using the effective number of stringers.

NOTE: MLL must be calculated for one- and two-way traffic.

MLL1 = N1 (mLL)

MLL2 = (smaller of N1 or N2 (mLL)

Condition if	For one-way use	For two-way use
N1 > N2	N1	N2
N2 $\geq$ N1	N1	N1

g. Determine the moment class from figures 8 and 9 using MLL for the appropriate modes of traffic. Find both tracked- and wheeled-vehicle classes.

3. Determine the shear class of the bridge span.

a. Obtain the total shear capacity of a stringer v from table 2 or 3.

b. Obtain the dead-load shear VDL from table 4.

NOTE: If L is not shown in GTA card, add the higher and lower VDL together, and divide by 2 to determine VDL.

c. Calculate the dead-load shear per stringer vDL.

$$vDL = \frac{VDL}{NS}$$

d. Calculate the allowable live-load shear per stringer (vLL).

$$vLL = v - vDL$$

e. Calculate the live-load shear capacity per lane (VLL).

(1) Steel stringers.

$$VLL = \frac{2vLL}{1.15}$$

(2) Timber stringers.

One lane Two lanes

$$VLL = \frac{16}{3}(vLL)\frac{(N1)}{N1 + 1} \quad \text{or} \quad \frac{16}{3}(vLL)\frac{(N2)}{N2 + 1}$$

f. Determine the tracked and wheeled shear class from fig. 10 & 11 using VLL for the appropriate traffic modes.

4. Determine the width restrictions and class from table 1.

NOTE: Use the highest class on the chart.

5. Determine the deck classification.

a. Calculate the effective thickness of the deck (teff).

(1) Laminated deck.

$$teff = (\%Lam)td$$

(2) Single-layer plank deck.

$$teff = td$$

(3) Multi-layer plank deck.

teff = td - 2 inches

b. Determine the deck class from fig. 3.

NOTE: If the class falls on the line for class 50 to 150, use the highest class.

6. Check the lateral bracing requirements. Calculate the number of lateral braces required (Nb).

NOTE: Add bracing, if required, before posting the final bridge classification.

a. Steel stringer.

$$Nb = \frac{L}{Sb} + 1 \text{ (table 3)}$$

b. Timber stringer.

(1) Three lateral braces are required if the stringer is marked by a asterisk (*) in your GTA card, or if $d \geq 2b$.

NOTE: The total depth of the stringer is d. The width of the stringer is b.

(2) Add bracing to the bridge, if required.

7. Determine the final class.

8. Draw the bridge sign.

Procedure for Timber Trestle Bridge

Timber- or Steel-Trestle Bridge with Timber Deck

Map Sheet Grid
Recon Officer/NCO Unit Date

BRIDGE DIMENSIONS

L _____ ft
b_n _____ ft
N_L _____ (2 if $b_n \geq 18$ ft)
N_s _____
S_s _____ in
N_b _____
S_b _____ ft
Deck: Single-layer, Multilayer, or Laminated
t_d _____ in
$\%lam$ _____

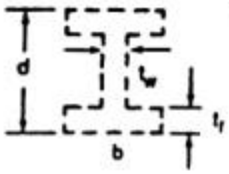

STRINGER DIMENSIONS

Timber: b _____ in
d _____ in
Steel: Type _____ (Table 3)
d _____ in
b _____ in
t_w _____ in
t_f _____ in

1. m _____ (Table 2, Timber; or Table 3, Steel)
2. M_{DL} _____ (Table 4)
3. m_{DL} _____ (M_{DL}/N_s)
4. m_{LL} _____
   a. Timber: $m - m_{DL}$
   b. Steel: $(m - m_{DL})/1.15$
5. L_m _____ (Table 2 or 3)
6. Adjust m_{LL} if $L>L_m$: $m_{LL}(L_m/L)$
7. N_1 _____ $(60/S_s) + 1$
8. N_2 _____ $0.375N_s$; calculate only if $b_n \geq 18$ ft
9. M_{LL1} _____ $(N_1)m_{LL}$
10. M_{LL2} _____ (smaller of N_1 or N_2)m_{LL}
11. Moment Classification (Figures 8 and 9):
    T_1 ____ T_2 ____ W_1 ____ W_2 ____
12. v _____ (Table 2 or 3)
13. V_{DL} _____ (Table 4)
14. v_{DL} _____ (V_{DL}/N_s)
15. v_{LL} _____ ($v - v_{DL}$)
16. V_{LL} _____
    a. Timber: $(16/3)(v_{LL}) \dfrac{(N_1 \text{ or } N_2)}{(N_1 \text{ or } N_2) + 1}$
    b. Steel: $(2v_{LL}/1.15)$
17. Shear Classification (Figures 10 and 11):
    T_1 ____ T_2 ____ W_1 ____ W_2 ____
18. Width Classification (Table 1):
    T_1 ____ T_2 ____ W_1 ____ W_2 ____
19. Deck Classification (Figure 3):
    T_1 ____ T_2 ____ W_1 ____ W_2 ____
    a. Single-layer: $t_{eff} = t_d$
    b. Multilayer: $t_{eff} = t_d - 2''$
    c. Laminated: $t_{eff} = t_d(\%lam)$
20. $N_{b(reqd)}$ _____
    a. Timber: 3 required if $d \geq 2_b$
    b. Steel: $(L/L_c) + 1$ (L_c in Table 3)
    Add braces if $N_b < N_{b\,(reqd)}$
21. **Final Classification:**

	T_1	T_2	W_1	W_2
Moment (Step 11)				
Shear (Step 17)				
Width (Step 18)				
Deck (Step 19)				
Final				

DETERMINE THE MILITARY LOAD CLASSIFICATION OF A CONCRETE SLAB BRIDGE

CONDITIONS

You are given a sample problem (less the military load classification), GTA 5-7-13, FM 5-446, and a directive to classify the bridge.

STANDARDS

You will determine the one- and two-way military load classifications for wheeled- and tracked-vehicles within ± three Classes. Remember this is a hasty method of classification.

TRAINING

1. Review the bridge reconnaissance report, and obtain the following information:

	Sample Problem
Given:	Span length (L) - 20 feet
	Roadway width (b_R) - 17 feet
	Width of slab (bd) - 21 feet
	Depth of slab (td) - 14 inches

NOTES:

1. Carry out all calculations two places to the right of the decimal.

2. Calculate be2only if bR ≥ 18 feet.

2. Determine the live-load moment, mLL (fig. 8)

a. Enter the table with the span length (L)drawing a vertical line until it intersects the curve representing the depth (td) of the slab, estimating (when necessary) where this point is.

b. From this intersection, draw a horizontal line to read the value of mLL on the left-hand axis.

3. Determine the effective roadway width;

One-way

$$be1 = \frac{L}{\frac{3}{4} + \frac{L}{bd}}$$

Two-way

$$be2 = \frac{L}{\frac{1}{4} + \frac{2L}{bd}}$$

4. Determine the live bending moment (MLL) for the bridge.

a. To determine MLL1 for one-way traffic, use the following formula:

MLL = be1 x mLL

b. To determine MLL2 for two-way traffic, use the following formula:

MLL = smaller of be1 or be2 x mLL

5. Determine the bridge class using figures 8 and 9.

a. To determine the one-way class, enter the Tables on the left-hand side with the value of MLL1 (one-way) and draw a horizontal line across to the right until it intersects with the span length in feet. Read the wheel and track one-way bridge class.

b. To determine the two-way class, enter the Tables on the left-hand side with the value of MLL2 (two-way) and proceed the same as when determining the one-way class explained in step 5a. (**NOTE: THIS STEP IS NOT ALWAYS NEEDED**)

c. Check the class determined for the bridge against the minimum lane widths and overhead clearance table. (Table 1) If the bridge does not meet the minimum width and overhead clearance standards, reduce the class IAW the table located on your GTA 5-7-13.

Concrete-Slab Bridge with Asphalt Wearing Surface

Map Sheet Grid
Recon Officer/NCO Unit Date

BRIDGE DIMENSIONS

L _____ ft
b_d _____ ft
b_R _____ ft
t_v _____ in (Do not include wearing surface.)

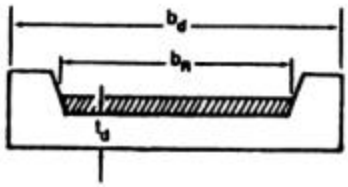

PROCEDURE

1. m_{LL} _____ (Figure 5)
2. b_e _____
   a. One-Lane:
   $$b_{e1} = \frac{L}{0.75+(L/b_d)}$$
   b. Two-Lane:
   $$b_{e2} = \frac{L}{0.25+(2L/b_d)}$$
   (Calculate b_{e2} only if $b_R \geq 18$ ft)
3. M_{LL1} _____ $(b_{e1})m_{LL}$
4. M_{LL2} _____ $(b_{e2})m_{LL}$
5. Moment Classification (Figures 8 and 9):
   T_1 ____ T_2 ____ W_1 ____ W_2 ____
6. Width Classification (Table 1):
   T_1 ____ T_2 ____ W_1 ____ W_2 ____
7. **Final Classification:**

	T_1	T_2	W_1	W_2
Moment (Step 5)				
Width (Step 6)				
Final				

DETERMINE THE MILITARY LOAD CLASSIFICATION OF A CONCRETE T-BEAM BRIDGE

CONDITIONS

You are given a sample problem (less the military load classification), FM 5-446,GTA 5-7-13, and a directive to classify the bridge.

STANDARDS

You will determine one- and two-way military load classifications for wheeled- and tracked-vehicles within ± theee classes. Remember this is a hasty method of classification.

TRAINING

Training Information Outline

1. Review the bridge reconnaissance report, and obtain the following information about the bridge:

a. Span Length (L). Given: L = 30 feet

b. Roadway width (bR). bR = 25 feet

c. Thickness of the slab (td). td = 7 inches

d. Depth of the stringers (d). d = 22 inches

e. Stringer spacing (SS). SS = 60 inches c/c = 5 feet c/c

f. Width of the stringers (b). b = 9 inches

g. Number of stringers (NS). NS = 6

NOTE: Carry out all calculations two places to the right of the decimal point.

2. Determine the total moment capacity of one stringer (m).

$m = .0116\ (SS \times d2)$

NOTE: Use SS and D in inches.

3. Calculate the dead load moment per stringer mDL.

$mDL = .00013(L^2)[(b)(d)+(td)(SS)]$

NOTE: Use L in feet; b, d, td, and SS in inches.

4. Determine the load moment per stringer mLL.

$$mLL = \frac{m - mDL}{1.15}$$

5. Calculate the effective number of stringers N1 and/or N2.

$N1 = \underline{5} + 1$ Do not round off

$$N2 = \frac{SS}{8}(NS)$$ Do not round off

NOTES:*

***1. Use SS in feet.**

***2. Calculate N2 only if the bR is ≥ 18 feet.**

Condition if	For one-way use	For two-way use
N1 > N2	N1	N2
N2 ≥ N1	N1	N1

6. Calculate the live load moment per lane (MLL).

MLL1 = N1 (mLL) and/or MLL2 = [smaller of N1 or N2](mLL)

NOTE: All necessary tables and figures are on GTA 5-7-13.

7. Determine the moment classes for both tracked- and wheeled-classes from GTA card.

8. Determine the width class from GTA card.

9. Determine the bridge classification.

10. Draw the bridge sign.

Concrete T-Beam Bridge with Asphalt Wearing Surface

Map Sheet
Recon Officer/NCO
Grid
Unit
Date

BRIDGE DIMENSIONS

L ____ ft
b_R ____ ft
t_d ____ in
S_s ____ in
N_s ____

STRINGER DIMENSIONS

d ____ in
b ____ in

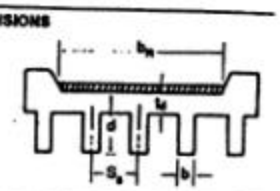

PROCEDURE

1. m ____ $0.0116(S_s)(d^2)$
2. m_{ss} ____ $0.00013\ L^2(bd + (t_d)S_s)$
3. m_{LL} ____ $(m - m_{ss})/1.15$
4. N_1 ____ $(60/S_s) + 1$
5. N_2 ____ $0.375N_1$; calculate only if $b_R \geq 18$ ft
6. M_{LL1} ____ $(N_1)m_{LL}$
7. M_{LL2} ____ (smaller of N_1 or N_2)m_{LL}
8. Moment Classification (Figures 8 and 9): T_1 ____ T_2 ____ W_1 ____ W_2 ____
9. Width Classification (Table 1): T_1 ____ T_2 ____ W_1 ____ W_2 ____
10. Final Classification:

	T_1	T_2	W_1	W_2
Moment (Step 8)				
Width (Step 9)				
Final				

DETERMINE THE MILITARY LOAD CLASSIFICATION OF A MASONRY ARCH BRIDGE

CONDITIONS

You are given a sample problem (less the military load classification), GTA 5-7-13, FM 5-446, and a directive to classify the bridge.

STANDARDS

You will determine the one- and two-way military load classification for wheeled and tracked vehicles within ± three classes. Remember this is a hasty method of classification.

TRAINING

Training Information Outline

Sample Problem

Given: Roadway width, bR = 24 feet.

Span length, L = 35 feet.

Depth of fill, df = 15 inches.

Crown thickness, tc = 15 inches.

Rise, R = 6 feet

Materials: Granite.

Joints: Normal joints with up to 1/4 inch of unpointed mortar.

Deformations: None.

Abutments: Minor vertical settlement of the left abutment--good size.

Approaches: Level and good condition.

Fill material: Good granular material.

Cracks: Small lateral and diagonal.

1. Determine the provisional load class(PLC).

a. Calculate the total crown thickness (tc + df).

b. Determine the PLC using figure 6 of your GTA card. Enter column A with the arch span (L) and column B with the total crown thickness. Connect these points with a straight line extending to column C. Read the provisional load class where the line intersects column C.

2. Determine the Arch factors.

a. Calculate the span/rise ratio.

Span/rise ratio (SR)= $\frac{L}{R}$

b. Determine the profile factor from Table 5.

c. Determine the material factor from Table 6.

d. Determine the joint factor from Table 6.

e. Determine the deformation factor from Table 6.

f. Determine the crack factor from Table 6.

g. Determine the abutment size factor from Table 6.

h. Determine abutment fault factor from Table 6.

NOTE: If two different factors are used, multiply one by the other.

i. Determine the abutment fault factor from GTA card. The value used for each type of abutment fault depends on the severity of the fault, the lower values being the more severe faults. The abutment faults should be evaluated by a trained engineer. If there is doubt of how severe a fault may be, use the lowest value for the fault factors.

j. Determine the deformation factor from GTA card. This factor accounts for the structural failure of the crown and is extremely critical because the arch gains most of its strength from the crown. (If no faults are found, use 1.0.)

3. Calculate the one-way tracked class of the bridge by multiplying the provisional class by all of the previous factors.

a. T1 = PLC x Product of factors 2b thru 2h.

NOTE: Always round down.

b. Determine the one and two-way width class of the bridge from GTA card.

c. Calculate the two-way tracked class for two-lane bridges.

T2 = .9 T1.

d. Determine the one and two-way wheeled-vehicle classes from figure 7 in your GTA card.

e. Determine the final bridge classification.

Masonry-Arch Bridge

Map Sheet
Recon Officer/NCO

Grid
Unit

Date

BRIDGE DIMENSIONS

L _____ ft
t_c _____ ft
d_f _____ ft

b_R _____ ft
R _____ ft

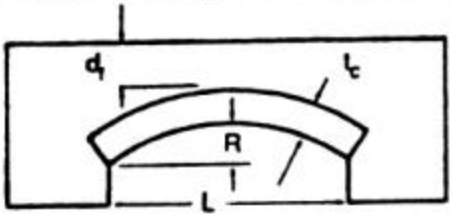

PROCEDURE

1. *PLC* _____ (Figure 6)

2. Arch Factors:
   a. Span-to-Rise Ratio ($SR = L/R$) _____
   b. Profile Factors (Table 5) _____
   c. Material Factors (Table 6) _____
   d. Joint Factors (Table 6) _____
   e. Deformations (Table 6) _____
   f. Crack Factors (Table 6) _____
   g. Abutment Size Factors (Table 6) _____
   h. Abutment Fault Factors (Table 6) _____

3. Classification of Arch Factors:
   T_1 _____ (*PLC x Product of Factors 2b through 2h*)
   T_2 _____ ($0.9T_1$)
   W_1 _____ (Figure 7)
   W_2 _____ (Figure 7)

4. Width Classification (Table 1):
   T_1_____ T_2_____ W_1_____ W_2_____

5. **Final Classification:**

	T_1	T_2	W_1	W_2
Factors (Step 3)				
Width (Step 4)				
Final				

REFERENCE(S):

FM 5-36	Route Reconnaissance & Classification
FM 5-446	Military Nonstandard Fixed Bridging
GTA 5-7-13	Bridge Classification Booklet

UNITED STATES MARINE CORPS
COMBAT ENGINEER INSTRUCTION COMPANY
MARINE CORPS ENGINEER SCHOOL
MARINE CORPS BASE
CAMP LEJEUNE, NORTH CAROLINA 28542-0069

C-23E01
5 June 00
(95 POI)

STUDENT HANDOUT

MEDIUM GIRDER BRIDGE

PURPOSE: The purpose of this period of instruction is to give you the knowledge and skills necessary to select the type of bridge to satisfy a particular gap and load class requirement, you will also compute the amount of bridge required to span the gap, either wet or dry, and the palletization and logistical requirements to move the bridge to the site. You will also be taught the components and construction procedures of the MGB.

LEARNING OBJECTIVE(S):

1. **TERMINAL LEARNING OBJECTIVE**(S):

a. Given a mission to install a Medium Girder Bridge, with the aid of references describe the procedures to erect a Medium Girder Bridge in accordance with FM 5-34 and TM 08676A-10/1-1. (1371.2.1)

2. **ENABLING LEARNING OBJECTIVE**(S):

a. Given a mission to span a gap with a MGB and military load classification requirements, determine the configuration of the MGB in accordance with FM 5-34 and TM 08676A-10\1-1 (1371.2.1a)

b. Given a mission to span a gap with a MGB and the bridge configuration, determine the resources (personnel and equipment) required to construct the bridge in accordance with FM 5-34 and TM 08676A-10\1-1 (1371.2.1b)

c. Given a mission to span a gap with a MGB and the personnel and equipment required, describe the construction sequence to construct the bridge in accordance with FM 5-34 and TM 08676A-10\1-1 (1371.2.1c)

OUTLINE

1. **SAFETY PRECAUTIONS**:

*****WARNING WARNING*****

a. MGB cannot be used when bridging requirements exceed the capabilities given in table 1-1 of TM 08676A-10/1-1.

b. Death or Severe Injury to personnel and damage to equipment may result if personnel fail to observe safety precautions.

c. Never throw tools or MGB components, injury to personnel, or damage to tools and components will occur which can cause accidents.

d. All members of a working party must be fully aware of what actions are to take place prior to start action.

e. Death or Injury to personnel will occur if extreme caution is not used when connecting bays. Use correct lifting techniques and make sure of secure footing. DO NOT put fingers or hands into pin holes or between components being moved or connected.

f. Always use the access holes in the side of the Landing Roller Pedestal (LRP) to operate the jack, keep hands and feet clear of the LRP base when operating the jack.

g. DO NOT use any type of metal object to drive pins or shoot bolts, if a pin has to be driven, use a rubber nylon faced hammer or a block of wood.

h. Death or Injury to personnel will occur if carrying bars are used to boom the bridge. Carrying bars can forcefully strike/crush personnel if the bridge were to run out of control into the gap.

i. Death or personal injury can result if the bridge is launched or delaunched by hand. Launching/delaunching by hand can result in personnel loosing control and the bridge crashing into the gap. When a bridge is to be launched or delaunched, a vehicle must be used at all times.

j. Personnel must be down off the bridge and out of the interior during booming, launching and delaunching.

k. Never raise or lower one end of the bridge unless the other end is fixed on locked rollers, on the ground or secured to vehicle (when on capsule or front roller beams).

l. Exposure to hydraulic oil under pressure is hazardous. Exercise appropriate safeguards when working with the 15 ton and 20 ton jacks.

m. Do not perform maintenance on the equipment while traffic is on the bridge.

n. When using compressed air, wear safety goggles or glasses and ensure air blast is not directed toward another person.

o. Welding of steel MGB components can be done at Direct Support Maintenance level. Welding aluminum MGB components requires special skills, equipment and safety procedures to prevent the risk of explosion and ensure structurally safe repair. Therefore welding of aluminum MGB components will only be done at depot maintenance.

2. **MEDIUM GIRDER BRIDGE (MGB) CHARACTERISTICS**

a. General: The Medium Girder Bridge (MGB) is a two girder bridge, with deck units fitted horizontally between the two longitudinal girders connected at each end with bankseat beams to form a 13'2" roadway width. Ramps connect at each end of the bridge to provide access, and curbs are added to the outer edge of the girders to mark the edges of the roadway. The weight bearing components are made of a fine magnesium aluminum zinc alloy and they are designed to handle 10,000 military load class (MLC) 70 crossings.

NOTE: ALL MGB ABBREVIATIONS ARE LOCATED IN THE STUDENT REFERENCE TEXT, FM 5-34, TM 08676A-10/1-1.

b. CONFIGURATION:

(1) The single story MGB provides class 70 bridging for gaps up to 29 feet. The four major components used in single story construction are, (1) Bankseat beams (2) Top panels (3) Deck units and (4) Ramp units.

(2) The double story MGB (without link reinforcement) provides class 70 bridging for gaps up to 95.5 feet, and is comprised of the seven major components listed above.

(3) The double story bridge will provide class 70 bridging for gaps up to 151.5 feet. When aided by the Link Reinforcement set (LRS), the LRS is comprised of (1) Anchor assembly, (2) Post tension assembly, (3) Long and short link.

(4) Bridge set capabilities: One medium girder bridge set will provide enough bridging components to build these bridge configurations and maintain a military load class of 70.

(a) (3) 5 bay single story bridges, or

(b) (1) 12 bay double story bridge, or

(c) (1) 13 bay double story bridge with link reinforcement.
Two sets of medium girder bridge will build;

(d) (7) 5 bay single story bridges, or

(e) (2) 12 bay double story bridge, or

(f) (1) 22 bay double story bridge with link reinforcement.

3. **COMPONENTS**: The Medium Girder Bridge is comprised of seven major components. Four are used in single story construction and all seven are used in double story construction. With every two sets of MGB, an erection set and link reinforcement set are issued. The following is a list of the seven major components in the MGB set:

(1) Bankseat Beam - 13' 3 1/2" long, 1' 9 3/8" wide, and 1'6" high, weight 570 lbs.

(2) Junction Panel - 5' 3/4" high, 3' 5 1/2" long on top, 2' 2 3/4" long on bottom, and 2' 1 1/2" wide, weight 478 lbs.

(3) End Taper Panel - 13' 2 5/8" long, 2' 4" wide, 1' 5 3/4" high, weight 600lbs.

(4) Ramp Unit - (UK) or short ramp 10' 1 1/2" long, 1' 10" wide, 9 1/4" high, weight 264 lbs.(US) or long ramp 14' 1/2" long, 1' 10 3/8" wide, 1' high, weight 400 lbs.

(5) Deck Unit - 9' 1" long, 1' 5 1/4" wide, 6 7/8" high, weight 163 lbs.

(6) Top Panel - 6'4" long, 2' 1 3/8" wide, 1' 9 5/8" high, weight 385 lbs.

(7) Bottom Panel - 6' 5" long, 2' 3" wide, 3' 7 3/8" high, weight 435 lbs.

(8) Anchor assembly LR - 10' 9 1/2" long, 2' 3 5/8" wide, 11 3/16" high, weight 362 lbs.

(9) Post tensioning assembly LR - 9' 4" long, 2' 3 3/4" wide, 2' 10 1/16" high, weight 657 lbs.

(10) Long reinforcing link - 12' 3 1/2" long, 1' 2 1/16" wide, 3 15/16" high, weight 125 lbs.

(11) Short reinforcing link - 6' 3 1/2" long, 1' 2 1/16" wide, 3 15/16" high, weight 77.5 lbs.

b. Connecting Components:

a. The bankseat beam, junction panel, and top panels all connect the same. Each have a dowel with a hole in it for the shoot bolt to go through, and each have a socket for the dowels to fit into. Align the dowels with the receiving socket and slide them together. Once the compression faces contact each other lift the shoot bolt and turn it into place this locks the components together. Now insert a panel pin into the lower jaws of the components and insert a safety clip through the pin on the inside end of the panel pin.

b. The bottom panel connects by sliding the upper jaws under the panel pin of the top panel, when fully seated close the shoot bolts and this locks the components together. Then push down on the back end of the component to align the lower jaws into the previous panel, then slide a panel pin through the jaws and insert a safety clip through the pin on the inside end of the panel pin.

c. The end taper panels do not have shoot bolts they simply pin into place with panel pins.

d. Deck units fit into the deck spacers on the top panels, four per bay. These are not pinned in place either, they just set in place.

e. Ramp units fit onto the outside edge of the bankseat beam in a tongue and grove fashion.

4. **LAUNCHING**

a. Panel point code and center of gravity: The panel point code is a system of numbering used to identify the location of the center of gravity (CG) and the boom and launch points of the bridge. The numbering is based on the top panels, their deck spacers and drain holes. The top panel numbering starts at the top panel next to the far bank bankseat beam. The panel point numbering begins at the front of the top panel i.e. the end closest to the far bank.

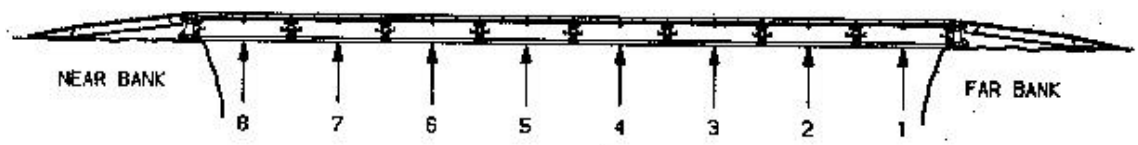

(1) The top panels are the bays of bridge and are numbered 1,2,3 etc.

(2) The deck spacers are panel points 2,4 and 6. The deck spacer at the rear of the top panel becomes panel point 0 of the next bay.

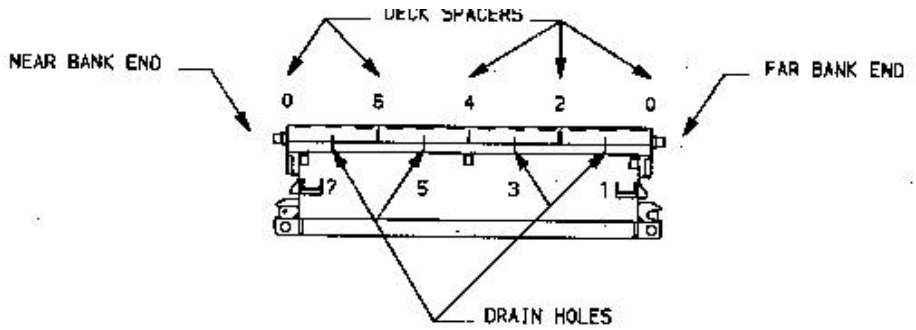

(3) The drain holes which are halfway between each deck spacer, are panel points 1,3,5 and 7.

b. Double story and link reinforced; The code system for double story and linked reinforced bridges is the same as described for single story bridges, except the junction and top panels at the ends of the bridge are lettered A, B and C (far bank end of bridge) and D, E and F (near bank end of bridge). The panel points run down the junction panel to the bankseat beam.

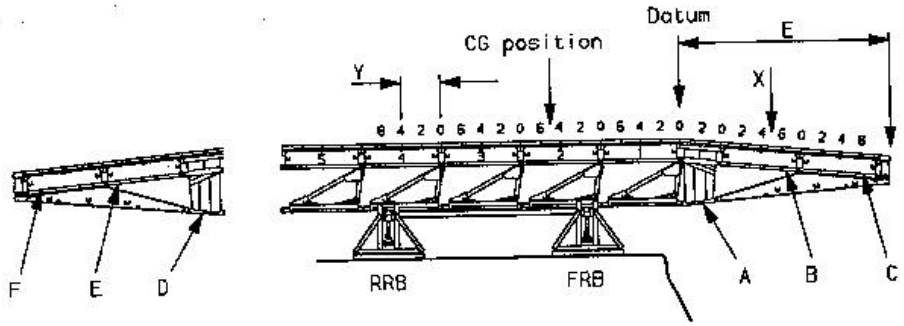

CG is at 2p5
Bridge boomed to 4p5
Distance Y = 4pp

X is described as Bp5
Junction between A and B is Bp0
E = End of bridge

c. BOOMING: This is the movement of a single story (ss) or double story (DS) MGB to a predetermined panel position in accordance with the TM 08676a-10/1-1. This movement will always terminate at a panel position which ensures that the center of gravity is behind the front roller beam. booming points are always read from the rear roller beam for (DS) MGB'S.

d. LAUNCHING: Launching occurs when the center of gravity is positioned over or forward (gap side) of the front roller beam (or capsule roller beam for linked bridges). All (DS) MGB'S will be launched by a vehicle. Once the center of gravity passes over the front roller beam (FRB) all further launch positions are read over the (FRB) (or capsule roller beam for linked bridges).

e. Launching Nose Code: The launching nose is coded in the build procedures and building tables as follows.

(1) The light launching nose front, light launching nose rear, and first launching nose heavy (total length 30 ft) are coded 1N1. The second launching nose heavy (10 ft) is coded 2N1, the third 3N1 and so on. When the nose configuration changes to two tier (double story), the first double story

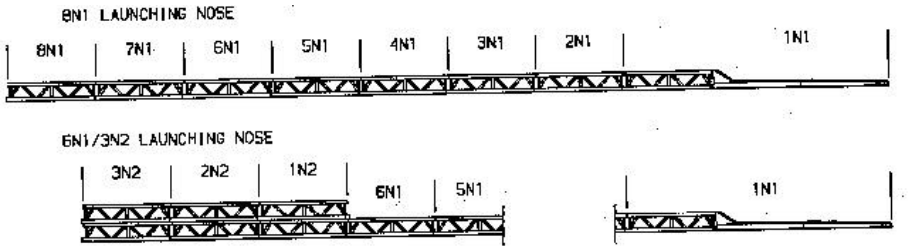

is coded 1N2, the second 2N2 and the third 3N2.

f. Landing Zone Number:

(1) The building tables and build procedures include a landing zone number to ensure correct location of the landing roller pedestal under the launching nose. The light launching nose is considered as divided into twenty equal zones, each 1 ft (300 mm) in length. During building or delaunching, the landing roller pedestal must be positioned not less than 9 in (229 mm) from the F peg, and at this time the LZ number is checked for correct position over the landing roller pedestal roller. The landing zone number should be that given or HIGHER. Never less than that given in the tables.

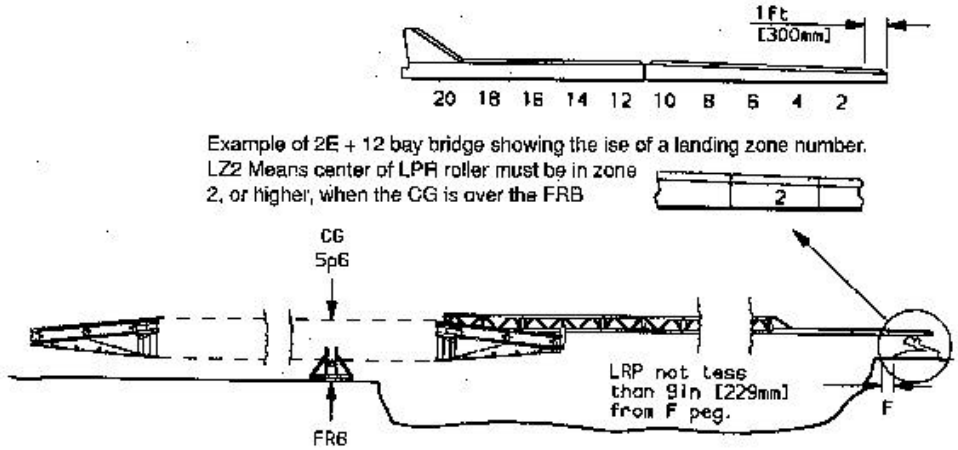

7. **DISASSEMBLY ON FAR BANK**: When disassembling the bridge on the far bank different procedures are required. The bridge has been delaunched onto roller beams on the far bank and safety packing placed between the gap and the forward roller beam (on normal sites). Sway braces, bankseat beam end of bridge top panels and end tapered panel have been removed. Because the junction panels, top panels and bottom panels are facing in the opposite direction to a normal near bank strip, they cannot be disconnected in the usual way. The drills to remove them are as follows:

a. REMOVING JUNCTION PANEL:

(1) Remove sway braces in the last three bays of bridge.

(2) Place one 10,000 lb cargo tie down strap around panel point 7 of last bay. this strap must be adjusted so as to provide 6 in (15.0 cm) of slack below bottom panel. Placement of this tie down strap prevents the bottom panel from dropping to far when the junction panel is removed. This strap reduces the chance of injury to personnel and damaging the panel.

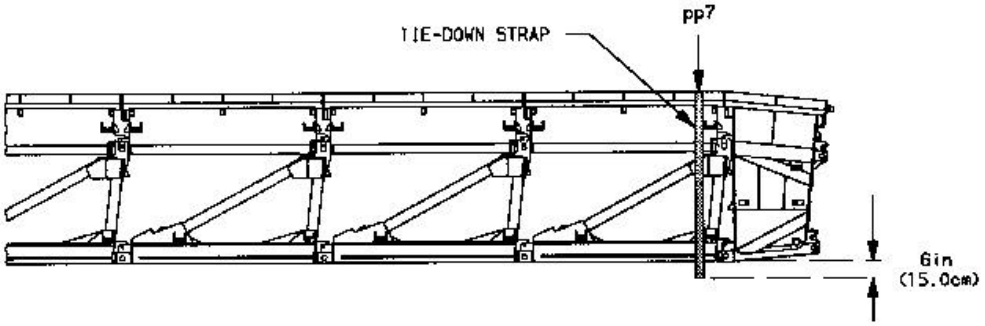

(3) Remove the retainer clips from the headless pins in the junction panel.

(4) Unlock shoot bolts of bottom panel in the last bay of bridge.

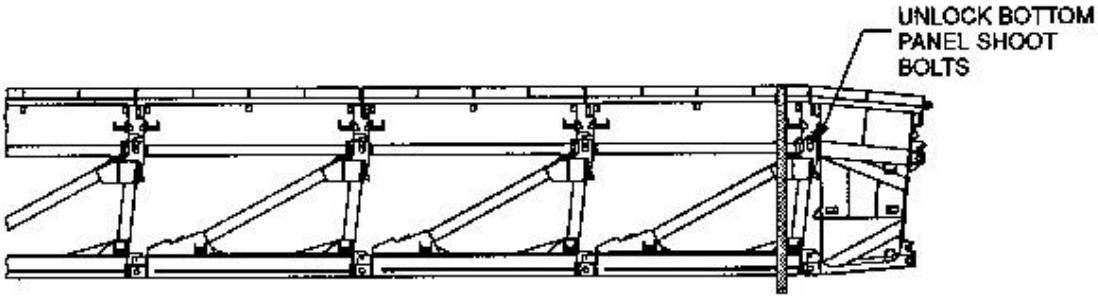

(5) Using decks as shown lift the junction panel and remove headless pin from upper pin hole in junction panel.

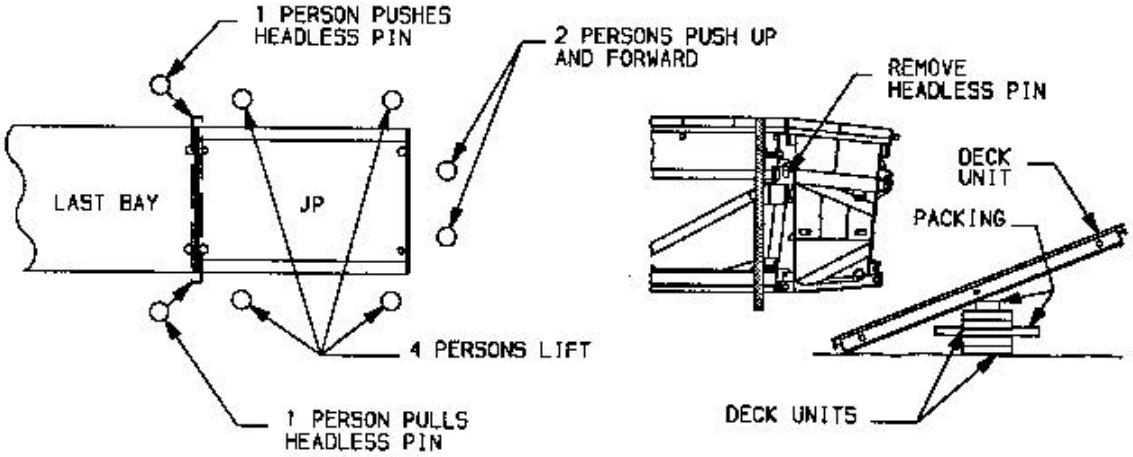

(6) Remove the panel pin from the pin hole in junction panel.

WARNING
BOTTOM PANEL WILL DROP INTO STRAP AS JUNCTION PANEL IS REMOVED
KEEP FEET AND LEG CLEAR OF BOTTOM PANEL.

(7) Four personnel lift junction panel and unlock top panel shoot bolts. Remove junction panel from the end of bridge.

b. REMOVING BOTTOM PANELS: When the bottom panel is ready to be removed, it will be supported by a strap at panel point seven, that was positioned there prior to removing the junction panel.

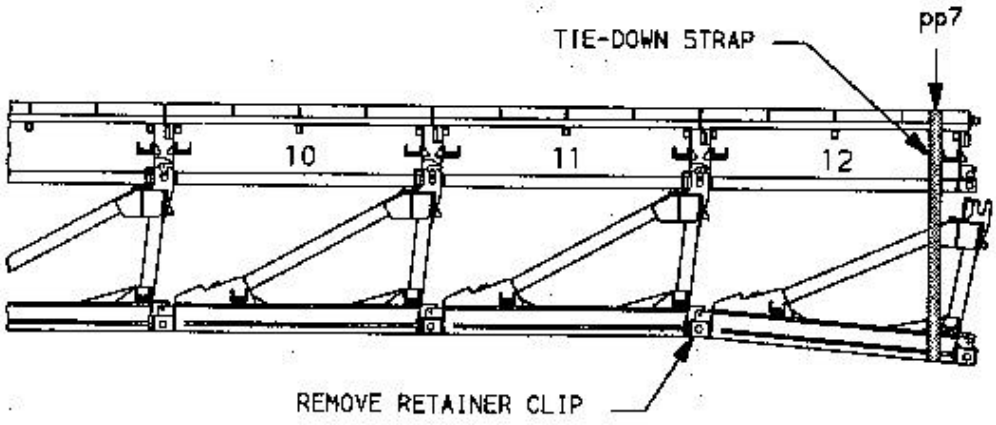

(1) Remove the retainer clip from the panel pin in the bottom panel.

(2) Four Marines lift bottom panel, while another Marine unhooks and removes the tie down strap, and repositions it at panel point seven of the next bay. Another Marine removes panel pins.

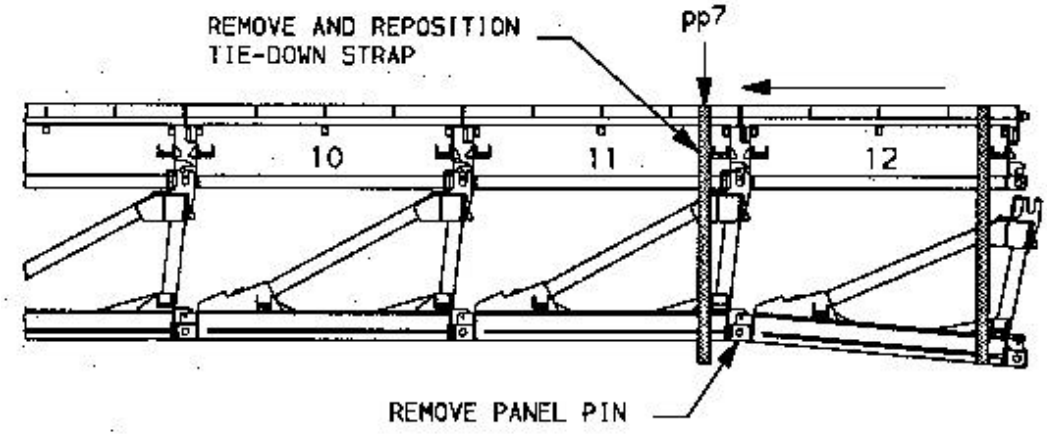

(3) Move bottom panel from under top panel.

c. REMOVING TOP PANELS:

(1) Place second tie-down strap around panel point seven of the next unstrapped bay.

NOTE

FROM THIS POINT ON, THESE TWO STRAPS WILL BE MOVED ALONG THE BRIDGE GIRDER SO THERE ARE ALWAYS TWO STRAPS AROUND THE LAST TWO BAYS OF BRIDGE.

(2) Remove the retainer pin from the panel pin in the last top panel.

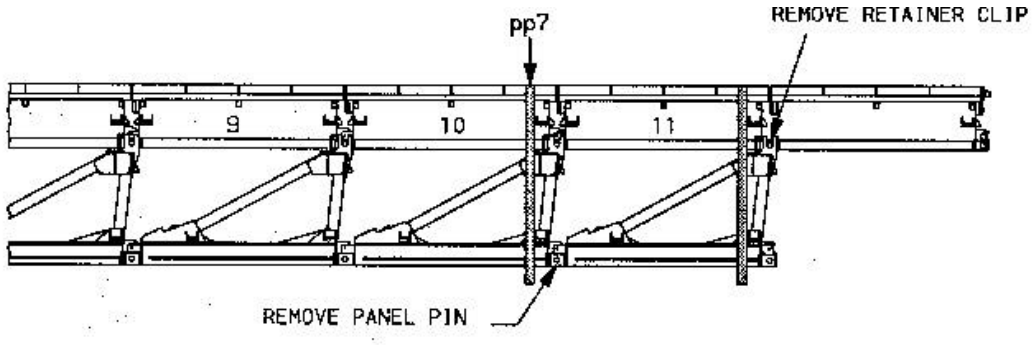

(3) Unlock the shoot bolts of the next four bottom panels.

NOTE

IT IS NECESSARY TO UNLOCK FOUR SHOOT BOLTS SO AS TO PROVIDE ENOUGH SLACK IN THE GIRDER TO PERMIT RELEASING THE BOTTOM PANEL UPPER JAWS FROM THE PANEL PIN IN THE REARMOST TOP PANEL. ENSURE THAT THE FOUR SHOOT BOLTS ARE UNLOCKED BEFORE TRYING TO LIFT THE REARMOST TOP PANEL.

(4) Remove the next sway brace in the bridge.

(5) Using 12 Marines, as shown below, lift rearmost top panel until bottom panel falls free of panel pin in top panel.

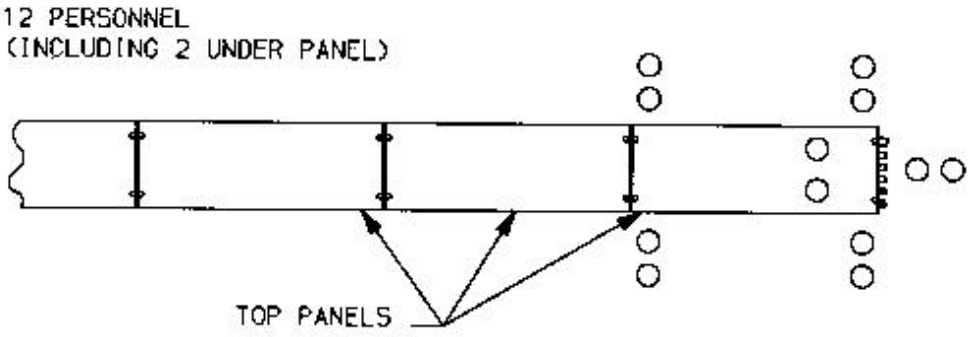

NOTE

THE PANEL PINS IN THE UPPER JAWS MAY NOT SETTLE BACK DOWN AFTER THE TOP PANEL IS LIFTED, AS SHOWN IN EXAMPLE. IF THIS HAPPENS IT WILL NOT BE POSSIBLE TO UNLOCK THE NEXT SHOOT BOLT.

TO UNLOCK THE NEXT SHOOT BOLT (BAY 7), TEMPORARILY LOCK THE SHOOT BOLT IN BOTTOM PANEL 10 AND LIFT TOP PANEL 11 UNTIL THE PINS 1N 9 AND 8 RESETTLE. UNLOCK THE SHOOT BOLTS IN BAYS 10 AND 7.

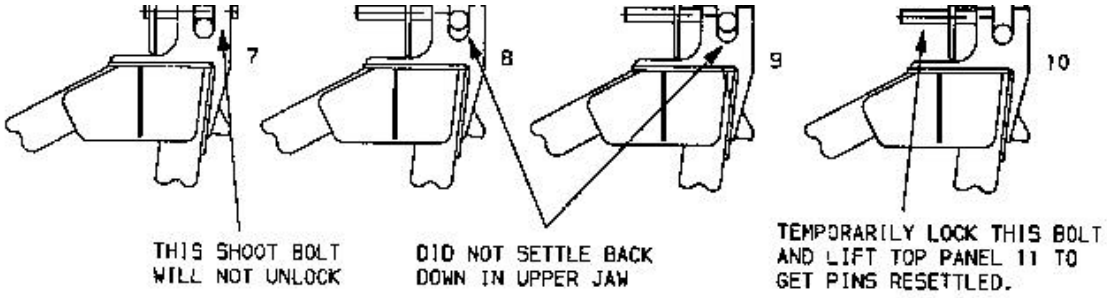

(6) Let the top panel down and remove the panel pin.

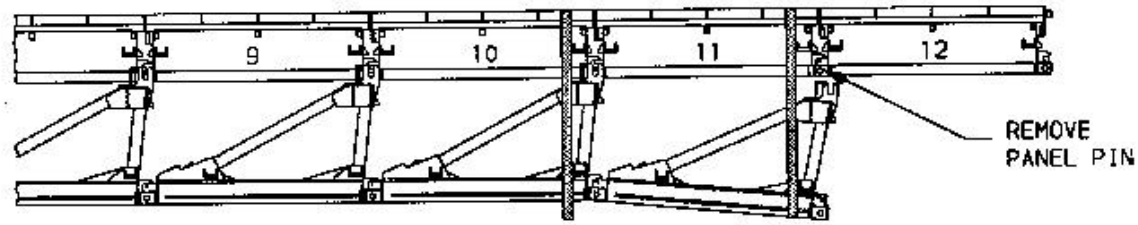

(7) Lift top panel, unlock the shoot bolts and remove the panel.

NOTE

AS THIS TOP PANEL IS REMOVED ENSURE THAT THE FOUR BOTTOM PANEL SHOOT BOLTS ARE UNLOCKED. AS THE NEXT BOTTOM PANEL IS REMOVED, UNHOOK AND MOVE THE TIE-DOWN STRAP TO THE NEXT UNSTRAPPED BAY.

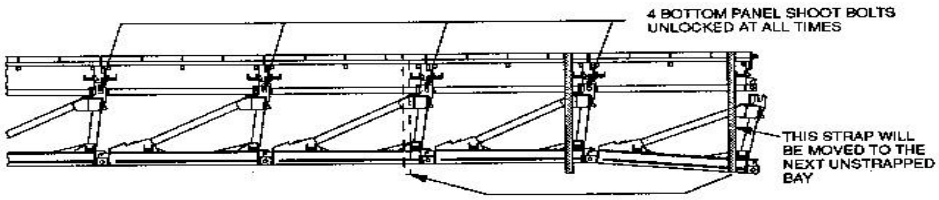

(8) Continue this process until the bridge is completely disassembled.

8. **RECONNAISSANCE**: As in any construction project a thorough Reconnaissance must be accomplished prior to planning the task. The Medium Girder Bridge is no exception. To find a site that has selection factors desirable for construction of single or double story MGB's, the following factors must be considered during the reconnaissance and recorded on the Engineer Reconnaissance Report (DA Form 1711-R):

(a) Access routes,

(b) Approaches,

(c) Banks,

(d) Width of gap

(e) Size of construction site,

(f) Height of banks above flowing water,

(g) Wind speed,

(h) Vehicle access

a. Access routes: There needs to be routes at each end of the bridge that tie into the main road network. these routes should not require too much maintenance or preparation for use.

b. Approaches:

(1) Single and Double Story MGB. The approaches should be two lanes wide and straight for 160 ft at each end of the bridge. Slope of the approach should not exceed 1 in 10. Transverse (side to side) slope should not exceed 1 in 10 (up to 5 bay SS) or 1 in 20 (all other bridges) in the first 60 ft measured from the A' peg. see figures 3-1 and 3-2 in the student reference text.

(2) Linked reinforced MGB. The approaches should be two lanes wide and straight for 160 ft at each end of the bridge. Slope of the approach should not exceed 1 in 20. Transverse (side to side) slope should not exceed 1 in 20 in the first 60 ft measured from the A' peg. see figure 3-2 in the student reference text.

c. Banks:

(1) Single and Double Story MGB. The banks need to be firm and stable, and about equal height. The difference in bank height cannot exceed 10% of the bridge length, as the bridge is restricted to a 1 in 10 slope.

(2) Link reinforced MGB. The banks need to be firm and stable, and about equal height. The difference in bank height cannot exceed 5% of the bridge length, as the bridge is restricted to a 1 in 20 slope.

(3) Banks at the expected bearing points of bridge should have a soil bearing capacity (SBC) of 2 tons per square foot. Bridges constructed on soil less than 2 tons per square foot will require packing to cover a 3 foot area under the End Taper Panel, to spread the weight of the bridge. Watch settling during crossing of traffic, and increase packing if needed. Packing material required is 3" x 8" x 36" lumber, and the height of the packing will be the minimum necessary to keep the End Taper Panels from touching the bank. The following table lists the soil bearing capacity of various types of soil.

Table 1-2 Soil Bearing Capacity

SOIL DESCRIPTION	Bearing value's in tons per square foot
Hardpan overlaying rock	12
Very compact sandy gravel	10
Loose gravel and sandy gravel, compact sand and gravely sand; very compact sand in organic silt soils.	6
Hard dry consolidated clay	5
Loose coarse to medium sand, medium compact fine sand	4
Compact sand clay	3
Loose fine sand, medium compact sand in organic silt soils	2
Firm or stiff clay	1.5*
Loose saturated sand-clay soils, medium sift clay	1*

*** Bridges constructed on this type of soil will require packing under ETP to spread weight of bridge. Watch settling during crossing of traffic, and increase packing if needed. Packing material required is 3" X 8" X 36" lumber. The height of packing will be the minimum necessary to keep ETP's from touching bank.**

d. Width of the gap, angle of repose

(1) Select a bridge centerline. The length of the centerline (on each bank) will be determined by the R distance (construction space) required for the bridge that will be built. R distances range from 5.8m to 40.5m (this does not include the length of the launch vehicle or the push bar). Initially a centerline should extend approximately 5.0m on each bank. Once the AR Gap and the bridge length has been determined, the centerline will be extended to the correct R distance plus the length of the launch vehicle and the push bar. This will ensure that there is sufficient space on both banks for vehicle access or egress, and space on the near bank for construction of the bridge. There should be sufficient clear area extending out 3.0m on both sides of the centerline for it's full length to allow for bridge construction. Additional clearance on each side is required for pallet placement and off-loading.

(2) Determine the location of firm ground on the near and far banks.

(a) For the field method of determining firm ground, assume the AR of the soil to be at 45 degrees. The soil bearing capacity should be at least 2 tons per square foot. Capacities less than 2 tons will require placement of timber packing under the bridge.

(b) At the edge of firm ground on the near bank, place the A' peg. At the edge of firm ground on the far bank, place the A peg. **The distance between the two pegs is known as the AR Gap**. Keep in mind that the MGB must not bear on the ground for more than 2.1m (6' 11") for Single Story or 2.3m (7' 6"), for Double Story, regardless of it's length.

(c) If the actual slope of the bank does not exceed 45 degrees from the horizontal, place the A and A' pegs as shown in figure 3-5 below.

figure 3-5

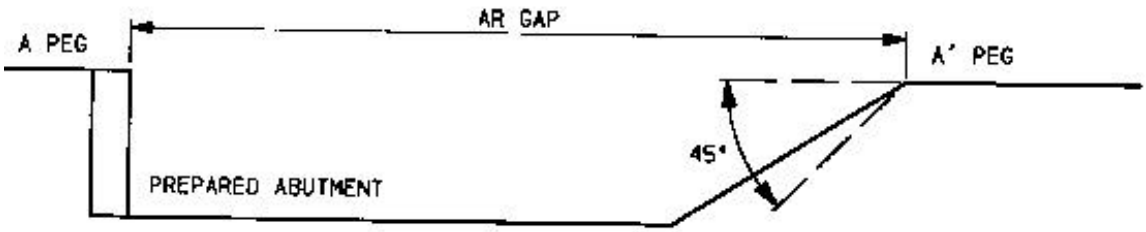

(d) If the actual slope of the bank does exceed 45 degrees from the horizontal, place the A and A' pegs a distance H from the toe of the slope which is equal to the height of the bank measured from the toe of slope to the top of the gap, as shown in figure below.

figure 3-6

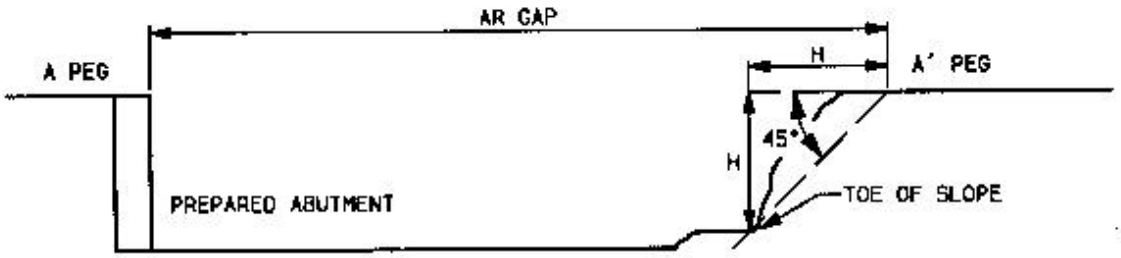

NOTE

Use a bit of "common sense" when applying (c) and (d) to an actual gap.

(e) Now measure the distance from the edge of firm ground on the near bank (A' peg) to the edge of firm ground on the far bank (A peg) using one of the methods described earlier and listed below. This distance is again is known as the AR Gap.

* Inaccessible point method.

* Actual measurements of gap with tape.

* Through the use of surveying equipment.

e. Size of construction site: there are two types of construction sites, a Normal site and Restricted site.

(1) Normal site - this site Provides construction space that allows fast and easy construction. Many times extensive engineer effort will be required to obtain enough space to be a normal site. The amount of time you have to construct the bridge is going to determine whether you improve the site or not. The paragraphs below describe normal (desired) assembly sites.

(a) Single Story Assembly Site: This assembly site is large enough for assembly of the bridge and wide enough for unloading and positioning of the loaded bridge pallets. The desired size of the assembly site for the longest single story bridge is 160 feet wide x 80 feet long. This length includes the R distance and truck with push bar attached. The width allows for ample construction space and good spacing of pallets from centerline. If needed, this area can be reduced considerably by bringing in pallet loads one at a time or as needed. The desired size of a site is shown in Figure 1 of the student reference text.

(b) Double Story and Double Story with Link Reinforcement Site: This assembly site is large enough for assembly of the bridge and wide enough for unloading and positioning of the loaded bridge pallets. The desired size of the assembly site for the longest Double Story and Double Story with Link Reinforcement is 160 feet wide x 160 feet long. This length includes the R distance and truck with push bar attached. The width allows for ample construction space and good spacing of pallets from centerline. If needed, this area can be reduced considerably by bringing in pallet loads one at a time or as needed. The desired size of a site is shown in Figure 1 of the student handout.

(2) Restricted site - this is where Construction space is reduced, requiring special construction procedures such as: longer launching nose, counterweights, and more frequent booming of the bridge.

f. Height of banks above flowing water: If there is a stream to be crossed the stream velocity must be checked and recorded. This is done by placing a floating object at mid stream and timing its travel downstream over a known distance. To measure the stream velocity, use the below procedure:

(1) Mark a known distance on the shore A to B, throw a floating object usually a stick upstream from point A when it passes point A, time it until it passes point B. Take the time traveled between the points and divide this into the travel distance. Do this several times to get an average stream velocity.

$$\text{Velocity} = \frac{\text{AB Meters/Feet}}{\text{Time to Float From A to B (seconds)}}$$

(2) Single Story Bridges: The bank height above flowing water or obstructions in the gap, should be a minimum of 2 feet (0.6 m).

(3) Double Story Bridges (2E + 1 through 2E + 12 bay): The bank height above flowing water or obstructions in the gap should be a minimum of 2 feet (0.6 m).

(4) Link Reinforced Bridges (2E + 13 w/LRS through 2E + 22 w/LRS): The bank heights above flowing water or obstructions in the gap, should be a minimum of 12 feet (3.7 m). In addition, there must be no obstacle intruding above a plane inclined 20 degrees downward in the gap for a distance of 15 ft (4.6 m) from each AR peg as shown below.

figure 3-4

NOTE: If the bank height is less than 12 feet (3.7) the rules in (a) and (b) below apply

(a) For bridges 2E + 14 bays and below there is no limit on bank height as long as the current does not exceed 5 fps (1.5 m/s) in which the reinforcing links can be immersed during launching and before tensioning.

(b) For bridges 2E + 15 bays and above there is no limit on bank height as long as the current does not exceed either:

1 3.5 fps (1.0 m/s) in which case the reinforcement can be immersed only during launching and before tensioning.

2 The current speed allowed as a vehicle crosses that particular bridge length is shown in table 3-4 below.

Table 3-4. Maximum Current Velocity vs. Bridge Length

2E + # of Bays w/lrs		22	21	20	19	18	17	16	15	14	13
Bridge Length	ft	163	175	151	145	139	133	127	121	115	109
	m	49.7	47.9	46	44.2	42.4	40.5	38.7	36.9	35.1	33.2
Current on immersed links	fps	1.64	1.64	3.08	3.67	3.93	4.29	6.95	7.67	8.43	8.43
	mps	0.5	0.5	0.94	1.12	1.2	1.31	2.12	2.34	2.57	2.57

g. Wind Speed: The wind speed permitted for each bridge length is given below. The bridge will require lateral anchorage before crossing vehicles

when wind speed exceeds those given. Lateral anchorage may be approach guys or pickets. Refer to TM 08676A-10/1-1 for emplacement instructions.

Table 3-5. Maximum Wind Speed vs. Bridge Length

2E + # of Bays		22	21	20	19	18	17	16	15	14	13
Bridge Length	ft	163	175	151	145	139	133	127	121	115	109
	m	49.7	47.9	46	44.2	42.4	40.5	38.7	36.9	35.1	33.2
Wind Speed	mph	50	50	95	120	120	120	120	120	120	120
	kmph	80.5	80.5	152.9	193.1	193.1	193.1	193.1	193.1	193.1	193.1

h. Vehicle Access: An area large enough to allow trucks with trailers to completely turn around so they can back into the site, is required adjacent to the bridge site. A vehicle park, covered and concealed, should be located from .3 to 3.1 miles behind the bridge site, in which the trucks with trailers can be parked after off loading.

i. Minimum Information needed:

(1) Location of the site - map coordinates or specific directions from the base camp to the site.

(2) Width of gap (AR gap) on bridge centerline. The unit must know the AR gap to plan the mission.

*** NOTE: IF ONLY THE MINIMUM INFORMATION IS PROVIDED, BRIDGE UNIT PERSONNEL WILL HAVE TO CONDUCT A RECONNAISSANCE TO OBTAIN ELEVATIONS, SITE CONDITIONS AND OTHER DESIGN RELATED INFORMATION.**

9. **BRIDGE LENGTH AND CLASS SELECTION**: Select the type of bridge to be built, based on AR Gap, MLC required, and resources available. This step is common to all lengths and configurations.

(1) Apply the AR Gap determined, to the AR Gap Range columns of Table 3-6 below, starting with section A, then B, C, and finally D.

Table 3-6. **Bridge Selection Tables**.

SS 4-12 Bays Section A			DS 1-12 Bays Section B			DS 13-22 Bays wo/LRS Section C			DS 13-22 Bays w/LRS Section D		
AR GAP m*	MLC (T)	#of bays	AR GAP m*	MLC (T)	#of bays	AR GAP m*	MLC (T)	#of bays	AR GAP m*	MLC (T)	#of bays
3.7-7.1	70T	4	6.4-9.0	70	1	28.3-30.9	50	13	28.3-30.9	70	13
5.6-9.0	70	5	8.2-10.8	70	2	30.2-32.8	50	14	30.2-32.8	70	14
7.4-10.8	40	6	10.0-12.6	70	3	32.0-34.6	40	15	32.0-34.1	70	15
9.2-12.6	30	7	11.9-14.5	70	4	33.8-36.4	40	16	33.8-36.4	70	16
11.0-14.4	30	8	13.7-16.3	70	5	35.6-38.2	30	17	35.6-38.2	70	17
12.9-16.3	24	9	15.5-18.1	70	6	37.5-40.1	30	18	37.5-40.1	70	18
14.7-18.1	20	10	17.3-19.9	70	7	39.3-41.9	24	19	39.3-41.9	70	19
16.5-19.9	16	11	19.2-21.8	70	8	41.1-43.7	24	20	41.1-43.7	70	20
18.4-21.8	16	12	21.0-23.6	70	9	43.0-45.6	20	21	43.0-45.1	70	21
			22.8-25.4	70	10	44.8-47.4	16	22	44.8-46.2	70	22
			24.7-27.3	70	11						
			26.5-29.1	70	12						

(2) Read down the columns until an AR Gap Range is found that brackets the AR Gap measured.

(a) Read across to check MLC given against the MLC required by the testing authority. The MLC given in the chart must meet or exceed the MLC required.

(b) Consideration must be given at this time to the soil bearing capacity and the bearing requirements of the bridge.

1 If the AR Gap measured is closer to the lower part of the range, then the bridge will be approaching maximum bearing on the ground.

2 If the AR Gap measured is closer to the higher part of the range, then the bridge will be approaching minimum bearing on the ground.

(c) It is also necessary to consider the amount and type of traffic and weather, e.g, will the bridge take large numbers of heavy tracked vehicles during 24 hours of rain.

(d) At this point, decide whether the first AR Gap range found provides the best bridge for the expected mission, or if you will have to go to the next higher AR Gap Range and bridge.

EXAMPLE:

(1) AR Gap measured = 35.6m (117 ft.)
MLC required = 70

(2) Select bridge. First AR Gap range that brackets 35.6m is in section D, Double Story 13-22 bays with Link Reinforcement Set (LRS). The range is 33.8 - 36.4m, 16 bay bridge with MLC 70. The next range that also brackets 35.6m, is 35.6 - 38.2m, 17 bay bridge with MLC 70.

(a) At this point, look at the soil bearing capacity, traffic loads, and weather. If the soil bearing capacity is low and large numbers of heavy vehicles are to cross during inclement weather, it would be wise to build the 17 bay bridge. The 17 bay would have more bridge bearing on the ground (on each bank) than the 16 bay.

(b) If the soil bearing capacity is high, and the vehicle traffic is expected to be light and weather fair, the 16 bay bridge might be suitable, it would conserve resources. The 16 bay would have less bridge bearing on the ground (on each bank) than the 17 bay.

STUDENT NOTES:

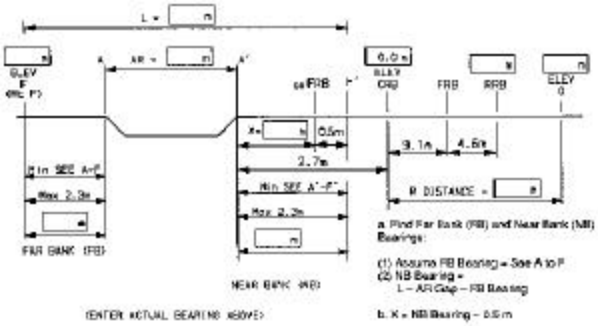

No of Bays	Minimums	
	A to F	A' to F'
13, 14, 18 thru 20	0.6m	1.4m
15	1.1m	1.4m
21	1.14m	1.4m
22	1.6m	1.6m

10. **CONSTRUCTION SITE LAYOUT**: Upon receiving the orders to construct a Medium Girder Bridge, the bridge commander NCOIC on site will receive a completed **design form** sheet. on this sheet it shows all the **key construction points** required to layout the bridge for construction. As shown in figure below

a. F peg- Designates the location of the far bank end of bridge (outer edge of bankseat beam). Initially placed distance given as minimum bearing in Table 3-32 TM 08676A-10/1-1 and in the student handout, for the bridge being designed. The distance, between the A and F peg is the amount of bridge that will bear on the far bank, and is known as the far bank bearing.

b. A peg- Edge of firm ground on the far bank.

c. A' peg- Edge of firm ground on the near bank.

d. AR Gap- The distance measured between the A and A' pegs. This is the actual gap to be spanned by your bridge.

e. F' peg- Designates the location of the near bank end of bridge (outer edge of the bankseat beam). The distance (determined later), from A' to F' peg is the amount of bridge that will bear on the near bank, known as the near bank bearing. The minimum acceptable near bank bearing is 1.4m (4'6").

f. ex FRB peg- Designates the position of the extra Front Roller Beam (ex FRB). The distance from the A' peg to the center of the ex FRB can not be less than 0.9m (3'), and from the ex FRB to the F' peg can not be less than 0.5m (1'6"). The placement of the ex FRB is determined by using the length of the bridge (L), AR Gap, far bank bearing, and bridge overhang (0.5m /1'6") to obtain an X distance (from A' to CRB). Placement of the ex FRB in this manner will ensure minimum effort during the jack down operation.

g. CRB peg- Designates the position of the capsill roller beam (CRB). The distance from the A' peg to the center of the CRB must be 2.7m (9').

h. FRB peg- Designates the position of the front roller beam (FRB) (measured from center to center) must be 9.1m (30').

i. RRB peg- Designates the location of the rear roller beam (RRB). It is placed 4.6m (15') from the FRB (measured center to center).

j. O peg- Marks the clear distance behind the capsill roller beam required to construct the bridge. It is positioned by measuring the R distance, Table 3-31, column (e), behind the CRB peg.

11. **HOW TO COMPLETE PERFORMANCE**:

a. Length of gap as determined above in section 8 and the TM 08676A-10/1-1 pg 3-16 para. 3-10a.

b. Select a bridge as described above in section 9 and the TM 08676A-10/1-1, pg 3-17 para. 3-10b

c. Read and note the bridge length and number of bays from table 3-31 columns (c) and (d) below and Table 1 of your performance sheet.

d. Read and note R Distance from column (e) of Table 3-31 below and table 1 of the performance sheet.

e. Read and note Nose Configuration from column (f) of Table 3-31 below and Table 1 of your PERFORMANCE sheet.

Table 3-31 DS MGB Design 13-22 Bays with LRS

Site and Bridge Dimensions					
AR Gap Ranges (a)	MLC* (b)	2E + No. of Bays (c)	Bridge Length L (d)	R Distance (e)	Nose Const. (f)
28.3 - 30.9	70 (T)	13	32.9	27.7	7N1
30.2 - 32.8		14	34.8	29	
32.0 - 34.1		15	36.6	29	
33.8 - 36.4		16	38.4	29.6	8N1
35.6 - 38.2		17	40.2	29.6	8N1
37.5 - 40.1		18	42.1	29.6	6N1 + 3N2
39.3 - 41.9		19	43.9	35.1	
41.1 - 43.7		20	45.7	38.7	
43.0 - 45.1		21	47.6	38.7	
44.8 - 46.2		22	49.4	40.5	

f. Calculate bearing: The minimum and maximum bearings for all DS bridges with LRS are shown in the Table 3-32 of TM 08676A-10/1-1 and below. To calculate the actual locations of the F and F' pegs, the following procedure is used:

Near bank bearing = bridge length (L)-(AR gap + See note below)

Where: Bridge length is obtained from column (d) of Table 3-31. The AR gap was measured in the first step of this design procedure.

Table 3-32 Bearings

No . of Bays	Minimums		Maximum
	Far Bank A to F	Near Bank A' to F'	Near/Far Banks
13, 14, 16 thru 20	0.6m	1.4m	2.3m
15	1.1m	1.4m	2.3m
21	1.14m	1.4m	2.3m
22	1.6m	1.6m	2.3m

g. Check bearing: On each end of the bridge there is a limit to how much or how little of the bridge can sit on the ground. This is known as bridge bearing. The maximum bearing near or far shores is 7' 6" (2.3m). The minimum bearing on either shore is 2' (0.6m).

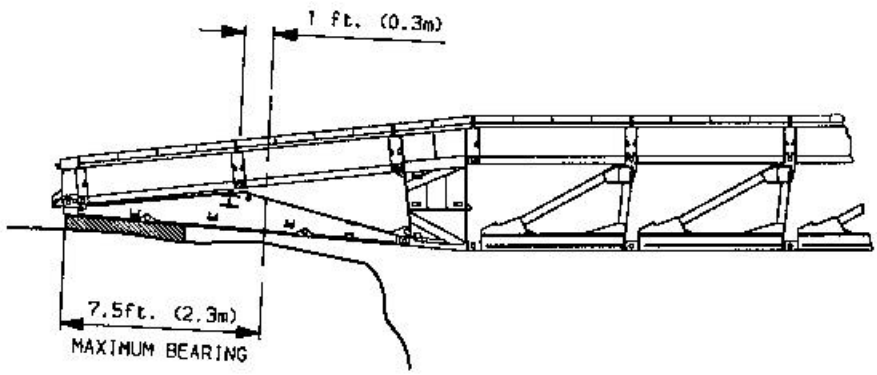

(1) If the near bank bearing is within the minimum and maximum bearing limits, it is not necessary to shift the position of the F and F' pegs. The positions will be as initially determined, F peg (minimum from Table 3-32) from A peg and the F' peg will be placed the distance determined as the near bankbearing measured from the A' peg.

(2) If the near bank bearing is more than the maximum bearing allowable (2.3m/7'6"), it will necessary to shift the bearing.

h. Shift bearing:

(1) Determine the amount of excess near bank bearing by subtracting the maximum bearing allowed from the amount calculated. At this point decide how to use the excess bearing as follows:

either

(a) Add the excess bearing to the initial far bank bearing (minimum from Table 3-32).

or

(b) Add the initial far bank and near bank bearings together, then divide by 2, resulting in an equal amount of bearing on both banks.

or

(c) Add the initial far bank and near bank bearings together, then divide the total bearing as you see fit, as long as minimums are met and maximums are not exceeded.

(2) Regardless of what is done, the locations of the F, F', CRB, FRB, RRB, and O pegs will not change or shift on the site. The location of the A and A' pegs do not change, nor does the width of the AR Gap.

(3) There are situations that will result in the maximum bearings being exceeded on both banks, due to the overlaps of the gaps and bridge lengths or by making an error in the design process. When this occurs:

either

(a) Dig out the soil from the bank until the bearing area will be less than the maximum.

or

(b) Pack up (place timbers) under the end of the bridge upon completion. This packing must provide enough bearing surface to equal the minimum bearing for the bridge.

i. Slope check:

(1) Longitudinal. Ensure that the difference in elevation between the F' (use the elevation of CRB) and F peg does not exceed 1/20th of the total bridge length. If it does, either crib up, undertake a major construction project, or find another centerline.

(2) Transverse/cross. Ensure that the transverse on both banks does not exceed 1/20th of the bridge width (4.0m / 13') for 13 - 20 bays at MLC 70(T) and 21 and 22 bays at MLC 60. No transverse slope is permitted for 21 and 22 bays at MLC 70(T) or any bridge at MLC 100(W).

j. Calculate H and G: Calculate the far bank height (H) and the ground (at tail of bridge) clearance (G) for later comparison against N (nose lift) and T (tail lift). The values of N, H, T and G are relative to a base line drawn through the CRB and RRB.

$$H = \text{Elev F} + \frac{\text{Elev RRB} \times (L - 0.5\text{m})}{13.7\text{m}}$$

$$G = \text{Elev O} - \frac{\text{Elev RRB} \times \text{R distance}}{13.7\text{m}}$$

k. Rule 1: Use a Launching nose cross girder (LNCG) setting to give adequate nose clearance (N) and tail clearance (T). See Table 3-33 in the TM 08676A-10/1-1 and in the student handout, columns (g), (h) or (i). Both roller beams are in the low position.

(1) Choose a LNCG setting from Table 3-33, columns (g), (h) or (i) which give an N greater than H. If none of these three choices meet the criteria, choose the highest value available.

(2) Check to see if the T value from Table 3-33 is greater than G.

(3) If N is lesser than or equal to H or if T is not greater than G, proceed to Rule 2.

(4) If N is greater H and T is greater than G, the LNCG setting chosen has adequate nose lift and the bridge selected has adequate tail clearance, proceed to loads required.

l. Rule 2: Lower the RRB to increase N. If there is ample tail clearance, some increase in N can be obtained by keeping the CRB in its highest position and lowering the RRB to its lowest position. The mathematical equation for this process is shown under Table 3-34, column (k) in TM 08676A-10/1-1 and in the student handout.

Table 3-34 Rule 2 DS 13-22 Bay with LRS

2E + No. of Bays	Lowering RRB to Increase N (k)
13	1.9 (0.82-G)
14	1.9 (0.79-G)
15	1.9 (0.76-G)
16	1.9 (0.72-G)
17	1.9 (0.69-G)
18	1.9 (0.66-G)
19-20	1.9 (0.63-G)
21	1.9 (0.60-G)
22	1.9 (0.57-G)

N Rule 2a. = N Rule 1 + Value N calculated from the equation shown under Table 3-34, column (k) in TM 08676A-10/1-1 and in the student handout.

m. Loads required: From Table 3-35, in TM 08676A-10/1-1 and in the student handout. Determine the truck and trailer loads required for the bridge.

Figure 3-35 MGB Pallets DS 13-22 Bay w/LRS

Pallet type	No. of Bays			
	13-15	16-18	19-21	22
Erection	1	1	1	1
Bridge	8	9	10	11
Link	2	2	2	2
Total	11	12	13	14

n. Manpower and Construction time: From Table 3-36 in TM 08676A-10/1-1 and in the student handout, determine the manpower and construction time requirements.

a. Personnel Requirements

Table 1-5 Work Parties for MGB

BRIDGE LENGTHS			WORK PARTIES
4 and 5 Bay	(26 ft - 7.9m/ 32 ft - 9.8 m)	SSB	1 NCO + 8 PERSONNEL
5 thru 12 Bay	(38 ft - 11.6 m/ thru 50 ft - 15.2)	SSB	1 NCO + 16 PERSONNEL
ALL DSB's			1 NCO + 24 PERSONNEL
Link Reinforcement Party			1 NCO + 8 PERSONNEL

b. Personnel Breakdowns

TYPES OF BRIDGE	LEFT SIDE CREW	CENTER CREW	RIGHT SIDE CREW
Single Story 4 to 5 Bays	4 Marines	0	4 Marines
Single Story 6 to 12 Bays	6 Marines	4 Marines	6 Marines
Double Story	10 Marines	4 Marines	10 Marines
Double Story W/LRS	14 Marines	4 Marines	14 Marines

c. Table 1-6. Building Times (Good Conditions)

	Single Story			Double Story (without reinforcement)					Double Story (with reinforcement)		
	4-5 Bay	6-8 Bay	9-12 Bay	1-4 Bay	5-8 Bay	9-13 Bay	14-18 Bay	19-22 Bay	13 Bay	14-18 Bay	19-22 Bay
Time by day (hrs)	1/2	3/4	1	3/4	1	1 1/2	1 3/4	2	2	2 3/4	3
Time by night (hrs)	3/4	1	1 1/4	1 1/4	1 1/2	2	2 3/4	3	3	4	4 1/2

All times exclusive of work on approaches.
For untrained troops, increase time by 20 percent.
For inclement weather, increase time by 30 percent.
For adverse site conditions, increase time by 30 percent.

NOTE

Additional vehicles are required to transport personnel.

(o) Final design: During the preceding design process, the information necessary to fill in the blanks below would have been obtained. Fill in these figures in the PERFORMANCE, at this point the design is considered complete.

(1) 2E+_____bays (2) LNCG Setting
(3) CRB Setting_____ (4) RRB Setting
(5) Bearing: NB_____FB_____ (6) Truck/Trailer loads
(7) Manpower Requirements____ (8) Time to Construct

12. **BRIDGE COMPONENT QUANTITY COMPUTATION**: Once the bridge has been designed you must wok out what type of bridge components and how many of each component will be required to build the bridge that was selected.

a. Bridge components: Appendix E, Tables 1, 2 and 3 of the TM 08676A-10/1-1 list the components required per bridge length. With these Tables it can be identified exactly which components and how many of them will be required for that particular bridge length.

(1). Single Story (SS) component requirements - are represented in Table E-1 of TM 08676A/10-1-1.

(2). Double Story (DS) component requirements - are represented in Table E-2 of TM 08676A/10-1-1.

(3). Double Story Link Reinforced (DS w/Link) component requirements - are represented in Table E-3 of TM 08676A/10-1-1.

b. Basket loads: For each bridge there are a number of baskets types that contain the smaller components required to build the bridge. Appendix E,

Tables 4, 5 and 6 of the TM 08676A-10/1-1 list the various basket types, and the number of baskets by type required for each bridge length. It also lists what components each basket contains.

(1) Single Story (SS) basket load requirements - are represented in Table E-4 of TM 08676A/10-1-1.
(2) Double Story (DS) basket load requirements - are represented in Table E-5 of TM 08676A/10-1-1.
(3) Double Story Link Reinforced (DS w/Link) basket load requirements are represented in Table E-6 of TM 08676A/10-1-1.

13. **PALLETIZATION PER BRIDGE**:

a. Single Story (SS) Palletization

(1) There are four different types of Single Story Pallet Loads. They are:

(a) ES = Erection Set

(b) SRDC = Short ramp, Deck and Curb

(c) SSE = Single Story End

(d) SSC = Single Story Center

(2) ES pallets carry the erection components for Single Story bridges. There are nine variations, ES4 thru 12.

(3) SRDC pallets carry short ramps, decks and curbs for Single Story bridges. There are nine variations, SRDC4 thru 12.

(4) SSE pallets carry bankseat beams, top panels and deck units for each end of Single Story bridge. There are two variations SSE and SSE6/8.

(5) SSC pallets carry top panels and decks for the center of Single Story bridges There five variations, SSC8 thru 12.

(6) Pallet loads for single story bridges are represented in Table E-7 of the TM 08676A/10-1-1.

b. Double Story (DS) Palletization

(1) There are four different types of Double Story Pallet Loads. They are:

(a) ED = Erection Double

(b) LR/D = Long Ramp Deck

(c) EOB = End of Bridge

(d) DSC = Double Story Center

(2) ED pallets contain the erection and launch components.

(3) LR/D pallets contain long ramp and deck units.

(4) EOB pallets contain all the components needed to construct the end of bridge, one variation shown (EOB1) contains two long ramps.

(5) DSC pallets contain complete bays of double story bridge (top and bottom panels). A DSC pallet has three complete bays of bridge on it. A DSC2 pallet has two complete bays of bridge on it. A DSC1 pallet has one complete bay of bridge on it.

(6) Pallet loads for Double Story bridges are represented in Table E-8 of the TM 08676A/10-1-1.

c. Double Story Link Reinforced (DS w/Link) Palletization

(1) Double story pallet loads are palletized as for normal double story palletization 2E + 12 Bay DS except, the variations of the DSC loads used for various bridge lengths after 12 bays.

(2) There are two different types Link reinforcement pallet loads, They are:

(a) LRS 1 - Link Reinforcement Set 1.

(b) LRS 2 - Link Reinforcement Set 2.

(3) LRS 1 pallet contains the reinforcing components which will be assembled with the bridge.

(4) LRS 2 pallets contain the additional erection and launch components needed during reinforced bridge assembly.

(5) Link reinforced Pallet loads are represented in Table E-9 of the TM 08676A/10-1-1.

14. **LOGISTICAL REQUIREMENT FOR TRANSPORTATION**: Transportation of the pallets to the bridge site can be accomplished utilizing the following vehicles:

a. M923/M925. Drop side cargo trucks can transport payloads of up to 20,000 pounds on the highway and 10,000 pounds cross-country. Fully loaded each will tow an additional trailer load of up to 30,000 pounds on the highway and 15,000 pounds cross-country. One pallet can fit on one M923/M925.

b. M939/M930. Dump trucks have the same payloads and towing capabilities as the M923/M925. One pallet can fit on one M939/M930.

c. MK48/14 (LVS). Can transport payloads up to 45,000 pounds on the highway and 25,000 pounds cross-country. One pallet can fit on one M48/14.

15. **OFF LOADING**:

a. Normal site pallet off-loading: The procedure below should always be followed when off-loading on normal sites.

(1) Ensure that the pallets are dropped so that they are never closer than 22 feet (6.7 m) to the centerline.

(2) Ensure that the pallets have a minimum distance of twelve feet between them.

(3) Pallets should be off-loaded in the order in which they are needed for construction. For example, the pallet containing the erection and launch components is always off-loaded first, to one side of centerline, near the edge of the gap.

(4) Material handling equipment will be required to off-load the MK 48/14 lvs.

(5) Drive trucks and trailers straight on and off site. Avoid backing them.

(6) Disconnect trailers in an area clear of the site and have trucks return for off-loading.

b. Restricted Site Pallet Off-loading: The procedure below should always be followed when off-loading on restricted sites.

(1) Ensure that the pallets are dropped so that they are never closer than ten feet (3.0 m) to the centerline.

(2) Pallets should be off-loaded in the order in which they are needed for construction. for example, the pallet containing the erection and launch components is always off-loaded first, to one side of centerline, near the edge of the gap.

(3) Material handling equipment (forklifts or cranes) will be required to off-load the MK 48/14 lvs.

(4) Backing of vehicles is required, use caution.

(5) Disconnect trailers in an area clear of the site and have trucks return for off-loading.

16. **OVERBRIDGES**:

a. Over bridges are constructed over existing bridges that have been damaged or have a low class capacity. The abutments of the existing bridge are used as bearing points for the overbridge. It is important to ensure the overbridge does not come in contact with the existing bridge span while traffic is crossing.

b. Overbridges can be built with or without launching noses.

(1) With launching noses; An overbridge is built as if it was being put across a gap. The roller beam closest to the existing bridge must be positioned so that it does not touch the existing span. Also, the roller beam

height should be kept high enough to prevent launching nose or far bank end of bridge from coming into contact with existing span.

(2) Without launching nose; An overbridge is built in place over the existing span. Ensure that the existing span is capable of supporting the weight of the overbridge construction, particularly if a double story is being constructed over a long, low class bridge.

17. **OVERBRIDGE DESIGN**:

a. The design for overbridges constructed with launching noses is the same as a bridge being built over a gap. Particular attention must be paid to deflection of the far bank end of bridge and launching nose cross girder setting.

b. For all overbridges, the amount of packing under the backseat beam must be calculated using the following formula and procedures:

FORMULA $P = P1 + P2$

P - Height of packing

P1 - Deflection of overbridge

P2 - Height of existing bridge above baseline through bearing points at ends of existing bridge.

(1) Measure height of existing bridge (P2) by using, the baseline joining the ground levels at the proposed locations of the BSBs as a datum.

(2) Find maximum deflection (P1) of overbridge to be constructed from the following table 6-24 in the TM 08676A/10-1-1, pg 6-68.

(3) Using information found in (1) and (2), determine the amount of packing (P) to be used under the ends of the overbridge.

(a) The DEAD LOAD, is the deflection of the bridge without any vehicles on it. The DEAD LOAD + LIVE LOAD (CENTRAL), is the deflection of bridge with a vehicle crossing at the center of the bridge. The DEAD LOAD + LIVE LOAD (ECCENTRIC), is the deflection of the bridge with a vehicle crossing over any area of the bridge other than the center. Particularly the ends of bridge.

REFERENCES:

FM 5-34 Engineer Field Data

TM 08676A-10/1-1 Operators Manual for Bridge, Medium Girder.

UNITED STATES MARINE CORPS
MARINE CORPS ENGINEER SCHOOL
COMBAT ENGINEER INSTRUCTION COMPANY
PSC BOX 20069
CAMP LEJEUNE, NORTH CAROLINA 28542-0069

C-23E03
5 June 00
(95 POI)

STUDENT HANDOUT

NONSTANDARD BRIDGE

LEARNING OBJECTIVE(S)

TERMINAL LEARNING OBJECTIVE: Provided a mission, a construction site, bridging personnel, engineer equipment, and construction design, describe the construction sequence that will meet mission requirements in accordance with TM 5-446 and TM 5-34. (1371.2.12)

ENABLING LEARNING OBJECTIVE(S):

a. Without the aid of references, identify the nomenclature of a nonstandard bridge in accordance with TM 5-446 and TM 5-34. (1371.2.12a)

b. Without the aid of references, identify the characteristics of a nonstandard bridge in accordance with TM 5-446 and TM 5-34. (1371.2.12b)

c. Without the aid of references, identify the capabilities of a nonstandard bridge in accordance with TM 5-446 and TM 5-34. (1371.2.12c)

d. Without the aid of references, determine the resources (personnel and equipment)required to construct a nonstandard bridge in accordance with TM 5-446 and TM 5-34. (1371.2.12d)

e. Without the aid of references, identify the site requirements to construct a nonstandard bridge in accordance with TM 5-446 and TM 5-34. (1371.2.12e)

f. Without the aid of references, describe the sequence of construction of nonstandard bridge in accordance with TM 5-446 and TM 5-34. (1371.2.12f)

g. Without the aid of references, identify the safety procedures involved in constructing a nonstandard bridge in accordance with TM 5-446 and TM 5-34. (1371.2.12g)

1. NONSTANDARD BRIDGES:

a. The term nonstandard is used to identify bridges constructed from raw materials, and designed to satisfy the requirements of a particular site.

b. The advantages of nonstandard bridges:

(1) Versatile.

(2) Materials are readily available.

(3) Easy to erect and construct.

2. NOMENCLATURE OF NONSTANDARD BRIDGE:

a. The two major components of the nonstandard bridge are superstructure and substructure. The substructure will be covered first.

b. The substructure consists of the foundations or the parts of the bridge that support the superstructure.

c. In the substructure there are two kinds of supports; End Supports which are called abutments and Intermediate Supports which are called Bents or Piers. Substructure - consists of the transverse support for the superstructure. The substructure
takes the load from the superstructure and supports to the ground. (See FM 5-446, PAGE 7-7)

d. End Supports: these are called abutments and are found one on each end of the bridge. There are two end supports.

(1) Timbersill Abutment:

(a) Is the simplest type of end support.

(b) Most commonly used.

(c) Used where you have a good solid or firm foundation.

(d) Constructed no closer than 3 feet from embankment.

(e) Consisting of:

1 Footings to distribute the weight to the ground. Minimum size 3" x 12". Minimum of 4.

2 Sill to distribute the weight of the footings, minimum size is a 6" x 8", largest dimension placed horizontal to the footings and ground.

3 End dam to prevent approach road from caving in between stringers. Minimum size 2' x 10".

(2) Combination Pile Abutment and Retaining Wall: (See FM 5-446, PG 7-8)

(a) Used when poor soil conditions, both embankment and gap, exists.

(b) Consists of:

1 Piles, creosote material, minimum 8" in diameter measured from the butt end up 1/3 the length of the pile. Minimum of 4.

2 Cap transmits load from stringers to piles. Minimum size is 6" x 8" with largest dimension placed vertically.

3 Retaining wall prevents lateral movement of earth. Minimum size, 2" x 10" material.

4 Wing piles support the retaining wall.

3. INTERMEDIATE SUPPORTS: Ground supports between the abutments. There are five intermediate supports. (May be timber, steel, concrete, or a combination of material, they may be supported by footings or piles)

a. Timber Trestle Bent: (See FM 5-446, Page 7-40)

(1) Is the simplest type of intermediate support.

(2) Used where you have a good solid or firm foundation. (Not suitable for use in soft soil or swift or deep streams)

(3) Consists of:

(a) Footings to distribute the weight to the ground, minimum size material 3" x 12". Must be at least as many as post.

(b) Sill to distribute the weight to the footings, minimum size material is 6" x 8".

(c) Post to transmit the load from cap to sill. Accounts for bridge heights. Minimum size material is 6" x 6", minimum number of post 4.

(d) Cap to transmit load from stringers to post, minimum size material is 6" x 8".

(e) Drift pins used to fasten the cap and sill to the post. When using drift pins you must have a Pilot hole. The Pilot hole must be 2/3 the diameter of the drift pin, and 3 inches shorter than the pin.

(f) Scabbing would be used when drift pins are not available. Scabs are 2" x 10" material minimum. The length of the scab is 2 x the depth of the cap or sill, and must be used on both sides of the bent where possible.

(g) Transverse bracing to provide lateral stability. Used when bent is 4 feet or higher, minimum size material is 2" x 10".

(h) Longitudinal bracing provides stability from bent to bent and is placed on the outside of the bent. The minimum size material used is 2" x 10", (When spacing between bents exceeds 25', bracing becomes cumbersome, to provide greater support and longitudinal stability for longer spans, use timber-trestle piers.)

b. Timber Trestle Pier: (See FM 5-446, PAGE 7-40/7-60)

NOTE: THE DESIGN OF THE TIMBER TRESTLE PIER IS IDENTICAL TO THE BENT DESIGN EXCEPT FOR THE CAP AND CORBEL SYSTEM.

(1) Used when both adjacent spans are over 25 feet or the load is too heavy for a timber trestle bent.

(2) Used where you have a good solid or firm foundation.

(3) Consists of:

(a) Two timber trestle bents framed together.

(b) Footings: There must be at least as many footings as post, minimum size material is 3" x 12".

(c) Sill distributes weight to the footings from post, minimum size material is 6" X 8".

(d) Post transmits load to sill from cap, and accounts for the bridge height. Minimum of 4 post per bent, minimum size material is 6" x 6".

(e) Cap transmits load to the post from stringers. Minimum size material is 6" x 8".

(f) Transverse bracing to provide lateral stability. Used when pier is 4 feet or higher, minimum size material is 2" x 10".

(g) Cross bracing required at all times, for longitudinal stability.

(h) Corbels transfers load to caps from common cap. Minimum equal to number of post in a single bent or more. Minimum size material is 6" x 8".

(i) Common cap transfers load to corbels from stringers. Minimum size material is 6" x 8".

c. Pile Bent (See FM 5-446, PAGE 7-41)

(1) Used in soft or marshy ground, deep water, or swift current.

(2) Consists of:

(a) Piles made of creosote material that are a minimum of 8 inches in diameter which is measured from the butt end up 1/3 the length of the pile. Minimum number of piles is 4.

(b) Cap transmits load from stringers to piles. Minimum size material is 6" x 8".

(c) Transverse bracing provides lateral stability, and is used when the bent is 11 feet above ground level. Minimum size material is 2" x 10", bolted on.

(d) Longitudinal bracing provides stability in the outside of the bents.

<u>NOTE</u>: PILES ARE DRIVEN WITH THE DROTT 30 CRANE WHICH HAS A DROP HAMMER WITH PILE DRIVER LEADS.

d. Pile Pier: (See FM 5-446, PAGE 7-41)

(1) Used when both adjacent spans are over 20 feet long or the load is too heavy for your pile bent.

(2) Used where you have soft or marshy ground, deep water or swift currents that are likely to scour. (See FM 5-446, PAGE 7-47)

(3) Consists of:

(a) Two pile bents framed together.

(b) Piles, creosote material, minimum of 8 inches in diameter measured from the butt end up 1/3 the length of the pile. Minimum of 4 piles per bent.

(c) Cap, transmits load to piles, minimum size material is 6" x 8".

(d) Transverse bracing, used when height of pile is 11 feet above ground level or higher. Minimum size material is 2" x 10".

(e) Corbels, transfers load to caps from common cap. Minimum of four per pier, and minimum size material is 6" x 8".

(f) Common cap, transfers load to corbels from stringer. Minimum size material is 6" x 8".

(4) Capping and Cutting of Piles:

(a) Pile must be a minimum of 8" in diameter at the butt end.

(b) Must be shaved off at 45 degree angle at butt end.

(c) When the piles go into the ground they all will not be the same height. Nail a timber across the piles where you need to cut them off. This will act as a guide. Then take chain saw with blade on its side and cut off level.

(d) Before you drive piles into the ground, you should take the diameter of the pile at the top and come down one diameter from the top, and wrap 10 to 12 wraps of number 12 wire around the pile. This will stop the mushroom effect of the top of the pile.

e. Crib Pier: (See FM 5-446, PAGE 7-39)

(1) Considered to be strongest and most versatile of all intermediate supports.

(2) Used on land or in water.

(3) Easy to erect but requires more timber, time and labor.

(4) Built from freshly cut logs that are a minimum of 6 inches in diameter. Logs are notched 1 foot back from each end.

(5) Built on land and launched into stream on rollers, floated into position and filled with rocks to provide weight and stability. Therefore, bottom has to be built solid.

(6) To determine width of base; take 1/3 of the desired height of pier and use that as base width.

(7) To determine length of base; take 1/3 of the desired height of pier plus roadway width plus 2 feet, will give you the base length.

4. THERE ARE TWO TYPES OF SPANS:

a. Simple Span: Extends from one intermediate support to another.

b. Continuous Span: Extends from abutment to abutment over intermediate supports without a break.

5. SUPERSTRUCTURE: Consists of stringers, decking, curb and handrail system. We will take each separately.

a. Stringers: Longitudinal member resting on and spanning the distance between intermediate supports or abutments. In most cases the stringer is the most critical member of the bridge.

(1) Timbers in excess of 20 feet are difficult to obtain because the capabilities of the Marine Corps Lumber Harvester is limited to 20 feet. In the theater of operations we try to limit span length to 18 feet.

(2) Usually try to use soft wood because of the weight factor involved, either DOUGLAS FIR or YELLOW PINE.

(3) If a timber used is too narrow, lateral buckling may occur. Lateral buckling is when a beam is compressed in the upper portion and a twisting action occurs. If the width of the timber will divide into the height of it more than 2, then lateral bracing will be required.

b. Steel:

(1) There are many types of steel stringers available in the U.S. I-beams come in two different shapes: wide flange (W-shape) and American standard (S-shape] beams.

(2) W - shape beams have essentially parallel flange surfaces and are the most common shape used in bridge construction. W-shape beams are most economical when moment controls the span. S-shape beams have flanges that are sloped towards the edges and have a larger web area than W-shaped beams. S-shape beams are more economical when shear controls the design of the span.

(3) There are also two types of steel beams. There is Rolled beams and Built-up beams. Rolled beams are beams that have been poured as a solid single piece. Built-up beams are beams that have their webs and flanges welded together.

(4) The biggest advantage steel has over timber is span length.

(5) The disadvantages of steel are:

(a) Lifting equipment and a welder is always needed.

(b) Lateral bracing is always needed because moment design of steel beams consists of selecting beams that satisfy the required tension and compression loads. However the beam may fail even though these stresses are not exceeded because of lateral buckling. Beams are proportioned so that the moment of inertia about the principal axis normal to the web is considerably larger than the moment of inertia about the other axis. The moment of inertia is an index of the beams ability to resist bending. This is done to produce shapes that make economical beams. The I-beam was selected because of the stress induced during simple tension on the bottom and compression on the top of the beam. The flanges of the steel beam resists compression and tension. The web serves to separate the flanges and provides shear resistance. The top flange, when in compression, acts like a loaded, slender column that buckles in the weak direction if not laterally braced. The tendency for lateral buckling in steel beams increases in direct proportion to the span length and the depth of the beam, and decreases as the area of the flanges increase.

(c) Steep stringer bearing failures; when steel stringers are placed on top of the cap or sill of the substructure, a bearing failure will result if there is insufficient area to carry the load. The two types of bearing failure are:

1. Web crippling: Web crippling occurs if the seat is insufficient. Sufficient area is especially critical when the stringer rests on timber or concrete, since these materials have lower bearing stresses than steel. A minimum seat of 6" prevents web crippling in a standard, rolled beam, but not in all cases.

2. Flange failure: Flange failure occurs if the flange is too thin. To prevent crushing or flange failures, always design bearing plates for steel stringers.

(d) Bearing plates. The final dimension of the plate over an intermediate support depends on the stringer arrangement. Connect the stringer to the support with an anchor bolt through the bearing plate and the flange. Slots the hole through the flange to provide a free end connection that allows for expansion due to temperature changes. You may also weld stringers to the bearing plates. Always allow one end of the stringer to move freely in the longitudinal direction to allow for expansion, but restrain it from lateral movement. The three types of end conditions that require bearing plates are:

1. Abutment end with fixed bearing.

2. Butted stringers at intermediate supports or expansion bearings.

3. Lapped stringers at intermediate supports.

(e) End bearing stiffeners: End stiffeners are not normally required for standard, rolled shapes unless abutment or intermediate support dimensions restrict the length of the bearing plate. If end bearing plates are required, construct them of angles or plates on each side of the stringer web. Position them over the center of the bearing at the end of each stringer. Proportion them to transmit the load to the web of the stringer. Mill the top and the stiffener to bear against the flanges of the stringer and extend as closely as possible to the edges of the flange. End bearing stiffeners are always designed for build-up beams.

(f) Nailing strip: A nailing strip is required if you are going to employ plank or laminated decking. The expedient methods are by using nails. In the first method nails are driven into the decking on the underside and then bent under the existing stringer flange to prevent lateral movement of the decking. The second method, nails are driven into a timber member, placed length-wise on top of the stringer, then bent under the flange as in the first method. This is done before stringer placement, and when decking begins, the deck is simply fastened to this member with nails. Another method is to have the welder burn holes for the placement of bolts. Care must be taken when doing this as to not weaken the flange.

(g) Decking: There is two types of decks. One is plank decking, the second is laminated decking. The rule of thumb is that you never have a deck that is less than 3" thick. this is because the deck serves a structural role.

1. Plank decking: Use deck planks made from dimensioned lumber having a thickness equal to or greater than the required deck thickness. If available deck material is not thick enough, layer planks until the required thickness is achieved, plus an additional 2". the extra 2" compensate for shear between the plank layers.

a. Placement of multiple layers; The first layer is placed perpendicular to the bridge centerline. The first board and every fifth board is extended 5' on each side of the bridge for placement of the handrail system. All planks are laid with a minimum of 1/4" space between them to allow for drainage and air circulation. The second layer is placed at a 30 to 45 degree angle to bridge centerline. Any additional layers are placed at an opposite 30 to 45 degree angle from the layer below it.

(2) Laminated deck: When the required plank deck thickness exceeds 6", consider using laminated decking. Normally, large stringer spacing and high design classifications require a thick deck. Although layering strengthens plank decks, they are not as stiff as laminated decks.

a. Construction of laminated deck: Place planks vertically to create a laminated deck. This type of deck distributes the live load more efficiently. The percentage of lamination will is determined by the design class, but the deck can be prefabricated in 24" wide panels that are

long enough to cover the roadway. The maximum spacing between members in a laminated deck should not exceed 10". (3) Wearing surface: Since the deck is designed to distribute the load to the stringer system, the deck must not be worn away by traffic. Install a wearing surface to prevent wear. On timber deck bridges, the wearing surface consists of 2" or 3" thick timber tread. The most common timber used is 2" x 12" planks. On one lane bridges, the tread is limited to the path of wheels or tracks. The tread fully covers the deck on two lane bridges.

(3) Curbs: A curb system guides traffic on the bridge. For timber trestle bridges, place 6" x 6" timbers on 5' centers on the curb risers. Risers of 6" x 12" x 30" material provide an adequate curb system. Rigidly attach curbs to the decking. The curb system will not withstand the impact of a heavy vehicle out of control. To design such a system would required curb system of excessive size and cost.

(4) Handrails: You may include a handrail system when designing your bridge. The minimum size handrail post is a 4" x 4" x 40" post, that is attached to the curb riser. The knee brace and the handrail are 2" x 4" material.

6. EQUIPMENT REQUIRED: Listed below is some of the equipment that you will need, you may need more or less depending on your bridge construction requirements. Operators are always requested for any equipment that is needed.

a. 7 1/2 Ton Crane

b. See Tractor

c. Tram (Forklift)

d. D7G Tractor (Bulldozer)

e. 621B Scraper

f. 130G Grader

g. 420C Compactor

h. 250 CFM

i. High Speed, High Mobile Crane 25 ton w/ Pile Driver

j. Pioneer and Carpenters Kits.

k. Survey Kit

7. CONTROLLING FUNCTIONS:

a. Supervision: Supervision is the direction and control of subordinates; that is, telling people what to do, then making sure they do it. There are three steps in the supervision process.

(1) Set Objective Standards. The key word in this step is "objective". The standard which is set must mean the same to both subordinates and supervisor. In construction, standards of percentage completion are often vague. For example, if a unit was directed to have the construction of six concrete slabs 50 percent complete by a certain date, should it have three slabs complete or forms set for all six? This problem can be avoided by directing the unit to complete specific activities in a detailed CPM network.

(2) Measure Performance. Performance can be measured either by inspection or by report. These control devices will be further discussed.

(3) Make Adjustments. If performance does not meet standards, adjustments can be made in two ways: either improve performance or lower standards. Most of the time improving performance is appropriate. At times, however, the supervisor may face a situation where the standard becomes unrealistic; for example, a schedule is based on poor estimates or fails to reflect delays. In these cases, the supervisor must be able to adjust the schedule or be given additional resources.

b. Quality Control: The control of construction quality in theaters of operations is the responsibility of the project supervisor. Quality control includes planning, designing, and monitoring the construction process to achieve a desired end result. During the planning phase, control is achieved by the proper application of network analysis (CPM), scheduling, and estimating. Designing a project for quality involves choosing the proper configuration, material, equipment, and personnel to achieve the construction. The construction monitoring steps require adherence to standard procedures of construction, established supervision practices, and accepted testing methods. Quality control in military construction is needed for many reasons. The basic objective of quality assurance, however, is to provide a safe, functional, and enduring project with an acceptable appearance.

c. Special Considerations: The preparations of complete drawings is necessary when standard designs are not suited to conditions at the construction site. The work of preparing drawings should not begin until a thorough exploration of subsurface conditions has been made. The preparation of accurate, neat, and complete drawings, fully describing what is to be built and how it is to be built, will not only insure a satisfactory structure, but will save construction time.

d. Elevation and Profile: The bridge elevation and profile view is an important part of the design drawings. This view should show the entire structure in elevation in skeleton form, together with the ground profile along the centerline of the bridge. It should be drawn to an accurate scale both horizontally and vertically.

1. Details: Span lengths of various structural units should be given, as well as the overall length of the bridge. Detail drawings should show all dimensions to the nearest 1/16 inch. The drawings should be used to show

identifying piece marks of the various structural elements, such as piers, abutments, and spans, which are to be drawn in greater detail elsewhere.

2. Steel Spans: In the case of steel spans, one end of the span should be fixed to the substructure, and the other end should be an expansion end, free to slide or move horizontally with temperature changes. The fixed end of a particular span is the end at which the longitudinal breaking and traction forces will be resisted. Therefore, at these points, the substructure must be designed to transmit these forces to the foundation.

C. Foundation Plan: This plan should show the outline of all footings, if any used to support piers and abutments. This plan should be drawn to scale, since it is the plan which will be used first by field construction forces.

D. Cross Sections: A cross sectional view of the superstructure roadway should be drawn to a scale sufficiently large to show all details accurately.

Approaches and Access Roads: To provide access to the bridge location, high priority should be given to the construction of approach and access roads to permit early delivery of equipment and supplies. Such roads are often temporary in nature, are hastily located, and built with immediately available construction equipment and labor. Certain features of approaches are important because they may affect the traffic capacity and useful life of the bridge. These are horizontal alignment, grades, approach embankments, sight distance, traffic movement and character of roadway surface.

A. Horizontal Alignment: Sharp curvature at bridge approaches should be avoided. They make turning of long vehicles difficult and require reduced speeds.

B. Grades: Steep grades reduce sight distance and also increase rolling resistance.

C. Sight Distance: Sight distance at bridges should be sufficient to permit drivers to observe the full length of the structure from either approach.

ERECTION PROCEDURES:

A. Erection From Ground With Crane: Where ground site conditions permit, long span bridges of moderate height can be erected most easily from ground level or from rafts. A medium-sized crawler-mounted crane is more maneuverable than truck mounted cranes and can be operated over rougher and softer ground. Erection of the superstructure from the ground is as follows.

1. If two cranes are not available, a gin pole is erected at the abutment end for use in raising one end of each of the outside stringers. Lines are attached from the gin pole and from the crane, to raise each outside stringer into position.

2. Interior stringers are raised in the same manner until all are in place.

3. Bracing is installed if needed. Then the deck is laid to the near shore abutment.

4. The gin pole is moved to the end of the completed span and the procedure starts all over again.

B. Erection From Bridge Deck:

1. Guide: Bridges consisting of a number of relatively short spans can be erected from deck level, and from a standpoint of economy of material, labor, and time, this is the best method for such structures. A medium sized truck mounted crane is appropriate for this work.

2. Spans Supported On Pile Bents: Erection of shore spans on pile bents proceeds on the following manner:

a. Materials and fabricated parts from the fabricating yard are delivered to the bridge within reach of handling equipment.

b. The pile bent constructed with the crane on the abutment.

c. Stringers for the first span are set in place with their ends on the abutment and the first bent.

d. Deck planks are laid across the stringers and secured.

e. The crane is moved out over the deck to the first bent. The second bent is driven and completed. This procedure is repeated until the far abutment is reached.

f. As the crane is moved off each span, tread planks and curbs are installed and walkways and handrails are completed.

3. Spans on Pile Piers: Procedure for erecting bridges with shorter stringer spans on pile piers is similar to that for bridges with pile bents. It is necessary to reach and construct only the nearest bent of the forward pile pier before a span can be placed temporarily and the crane moved out on the structure.

4. Spans on Timber Trestle Bents: Foundations for timber bents are usually constructed in advance and the erection of the bents proceed as follows.

a. Foundation sills, although framed with bents, are set separately and anchored to posts with scabs or drift bolts, or to footings with anchor bolts.

b. The first bent is delivered to the crane in assembled form, and is placed by the crane on a previously anchored sill. The bent is carefully guided with tag lines, and bents more than one story high should be set one story at a time.

c. The bent is braced with final or temporary bracing. Anchor bolts are tightened.

d. The stringers are set and the deck is laid.

e. The crane is moved out onto the structure.

f. Temporary bracing holding the first bents are removed.

g. Final bracing is then installed.

h. This procedure is repeated until the far abutment is reached.

i. As the crane is moved off of each span, tread planks and curbs are installed, walkway and handrails are completed.

5. NONSTANDARD BRIDGE TERMINOLOGY

a. Moment - when a simple beam is loaded, it deflects or bends. The horizontal fibers in the lower part of the beam are lengthened due to tensile forces, while the fibers in the upper portion of the beam are shortened due to tension in a moment failure.

b. Shear - this is two forces acting in opposite directions. Most critical point for shear is within one fourth the length from either end of the span.

c. Kip - term representing 1000 pounds.

d. Live load - the live load consists of the weight of the vehicles moving across the bridge.

e. Dead load. the dead load is the weight of the bridge itself.

f. With the aid of the draft change to FM 5-34, we can design a nonstandard bridge constructed of wood or steel.

NOTE: ON PAGE B-2 OF FM 5-446 ARE NOTATIONS AND EXPLANATION OF SYMBOL USED.

DESIGN SUPERSTRUCTURE OF A TIMBER TRESTLE BRIDGE USING STEEL STRINGERS

With the listed information below and the use of the FM 5-446, page B-5 each step of design will be explained with examples so you as a student will correctly design a Timber Trestle Bridge.

B-5 NOTATIONS

Ag -ground-contact area, in square inches
b -stringer width, in inches
bc -cap width, in inches
bft - width of the footer, in inches
bp - plate width
bR -curb-to-curb roadway width, in feet
d -stringer depth, in inches
dc -cap depth, in inches
dco -corbel depth, in inches
D -pile diameter, in inches
Ed - hammer impact energy, in ksi
fbDL -allowable dead-load stress, in ksi
f -soil friction coefficient
fk -safe soil bearing pressure, in ksf
FBf -footing capacity (bearing)
h -height of hammer fall, in feet
hb -bent height, in feet
L -span length, in feet
Lco - corbel length, in feet
Lf -footing length, in feet
Lg -length of pile in the ground or soil layer, in feet
Lm -maximum span length, in feet
Lp -plate length, in inches
m -total bending moment per stringer, in kip-feet
mco -moment capacity per corbel, in kip-feet
mDL -dead-load bending moment per stringer, in kip-feet
mLL -live-load bending moment per stringer, in kip-feet
MDL -dead-load bending moment for entire span, in kip-feet
MLC -military load classification
MLL -live-load bending moment per lane, in kip-feet
MLL1 -live -load bending moment for one-lane traffic
MLL2 -live-load bending moment for two-lane traffic
Nb -number of braces
Nco -number of corbels
Ne -effective number of stringers
Nf -number of footings
NL -number of lanes
Np -number of posts or piles per bent
Npe -equivalent number of posts or piles
Npr -required number of posts or piles
NR -number of rows (bents)
Ns -number of stringers
N1 -effective number of stringers for one-lane traffic
N2 -effective number of stringers for two-lane traffic
P -total design load
Pp -pile penetration, in inches per blow
PLC -provisional load classification
Ppc -post capacity, in ksi

R -rise of the arch, in feet
S -section modulus, in cubic inches
Sb -brace spacing, in feet
SBC -soil bearing capacity
Sco -corbel spacing, in inches
Sf -footing spacing, in inches
Sp -post or pile spacing, in inches
Spm -maximum post spacing, in inches
Ss -center-to-center stringer spacing, in feet
tc -crown thickness, in inches
td -deck thickness, in inches
teff -effective deck thickness, in inches
tf -flange thickness, in inches
tft -thickness of footer, in inches
tp -plate thickness, in inches
tr -required deck thickness, in inches
tw -web thickness, in inches
tx -thickness factor
v -total live-load shear per stringer, in kips
vco -shear capacity per corbel, in kips
vLL -live-load shear per stringer, in kips
vDL -dead-load shear per stringer, in kips
Vr -required shear per stringer, in kips
VDL -dead-load shear for entire span, in kips
VDL1 -dead-load shear for one-lane traffic, in kips
VDL2 -dead-load shear for two-lane traffic, in kips
VLL -live-load shear per lane, in kips
Wh -hammer weight, in kips
Ws -stringer weight, in kips
XL -footing length factor
XPL -plate thickness factor
%lam -percent of lamination

Rapid Field Design

Timber-Stringer Superstructure Design

Bridge Dimensions		Stringer Dimensions	
L(ft)	17	Type: Timber	
MLC	70	d (in)	10
NL	2	b (in)	24
bR (ft)	23		
m			

Procedure

Step	Formula	Considerations	Example Calculations
1	$N_s = \frac{bR}{6} + 1$	Minimum of four required	$N_s = \frac{23}{6} + 1 = 4.83$ stringers (Round answer to 5 stringers.)
2	$S_s = \frac{bR}{Ns-1}$		$S_s = \frac{23}{5-1} = 5.75$ feet
3	a. One lane $Ne1 = \frac{5}{Ss} + 1$ b. Two lane: $Ne2 = \frac{3}{8}Ns$		a. One lane: $Ne = \frac{5}{5.75} + 1 = 1.86$ stringers b. Two lane: $Ne2 = \frac{3}{8}(5) = 1.87$ stringers
4	MLL per lane: a. Wheeled b. Tracked	Figures A-1 and A-2 Pg A-17 Use the larger value for remaining design procedures.	a. Wheeled: 260 kip-feet b. Tracked: 340 kip-feet
5	$mLL = \frac{MLL}{Ns}$		$mLL = \frac{340}{5} = 68$ kip-feet
6	MDL	Table A-1 pg A-14 Estimated. If the bridge is two-lane, determine any width adjustment required.	MDL = 37.36 kip-feet
7	$mDL = \frac{M_{DL}}{Ns}$		$mDL = \frac{37.36}{5} = 7.47$ kip-feet
8	m = mLL + mDL	The required moment capacity must be less than the actual moment capacity of the selected stringer (Table E-2). pg E-4	m = 68 + 7.47 = 75.47 kip-feet m for 12x14 = 78.40>75.47; except span length is to short 16.7' you need 17' 10 x 16 =85.30 > 75.47

Step	Formula	Considerations	Example Calculations
9	VLL per lane a. Wheeled b. Tracked	Figures A-3 and A-4 . pg A-18 Use the larger value for remaining design procedures.	a. Wheeled: 71 kips b. Tracked: 77 kips
10	vLL = 0.1875VLL(Ne+1) / Ne	For one-lane class, use Ne1. For two-lane class, use smaller value of Ne1 and Ne2.	vLL = 0.1875(77)(1.86+1) / 1.86 = 22.19 kips example: 0.1875x77x2.86/1.86=41.29 = 41.29 / 1.86 = 22.19 kips
11	a. One lane: VDL1 = VDL b. Two lane: VDL2=VDL(bR / 24)	VDL from Table A-1.pg A-14 If the bridge is two-lane, determine any width restriction required.	a. One lane: VDL1 = 5.22 kips b. Two lane: VDL2=8.74(23 / 24)=8.37 kips Constant
12	vDL=VDL / Ns		vDL = 8.37 / 5 = 1.67
13	vr = vLL + vDL	The required shear capacity must be less than the actual shear capacity of the selected stringer (Table E-2).pg E-4	vr = 22.19+1.67=23.86 kips 10 x 16 = 16.0; 16 < 23.86 no good 10 x 24 =24.0; 24 > 23.86 and m is 192 which is > 75.47 **10 x 24**
14	Nb= 3 if b > 2d (look at table E-2 pg E-4)	Minimum of 3 required if b>2d 24 > 20	required
15	a. tr > 6in: %lam = (tr / td) 100% b. tr < 6 in: tr = td + 2 in Determine tr from fig 6-9 pg 6-16	a. Use a laminated deck. b. Use a plank deck. assume 3 x 10 inch planks are used.	tr > 6 inches; therefore, use a laminated deck %lam = (8 / 10) 100% + 80% Use the lamination pattern from Figure 3-15 (page 3-24) that equals or exceeds the required %lam.
16	Curbs and handrails	Use the standard design in Figure 6-13 pg 6-22	

td = deck thickness
tr = required deck thickness
d = stringer depth in inches

Rapid Field Design

Steel-Stringer Superstructure Design

Bridge Dimensions		Stringer Dimensions	
L(ft)	30	Type: W21x73	
MLC	80	b(in)	8.25
NL	2	d (in)	21.25
bR(ft)	28	tf(in)	.75
		tw(in)	0.75

Procedure

Step	Formula	Considerations	Example Calculations
1	$Ns = \frac{bR}{6} + 1$	Minimum of four required.	$Ns = \frac{28}{6} + 1 = 5.66$ stringers (Round answer to 6 stringers.)
2	$Ss = \frac{bR}{Ns-1}$		$Ss = \frac{28}{6-1} = 5.6$ feet
3	a. One lane: $Ne1 = \frac{5}{Ss} + 1$ b. Two lane: $Ne2 = \frac{3}{8} Ns$		a. One lane: $Ne1 = \frac{5}{5.6} + 1 = 1.89$ stringers b. Two lane: $Ne2 = \frac{3}{8}(6) = 2.25$ stringers
4	MLL per lane a. Wheeled b. Tracked	Figures A-1 and A-2 (pg A-17) Use the larger value for remaining design procedures.	a. Wheeled = 600 kip-feet b. Tracked = 890 kip-feet
5	$mLL = \frac{MLL}{Ne1,2}$	For one-lane class, use Ne1. For two-lane class, use smaller value of Ne1 and Ne2.	$mLL = \frac{890}{1.89} = 470.90$ kip-feet
6	MDL	Table A-1 (pg A-14) Estimated. If the bridge is two-lane, determine any width adjustment required.	MDL = 140.63 kip-feet,
7	$mDL = \frac{MDL}{Ns}$		$mDL = \frac{140.63}{6} = 23.43$ kip-feet

Step	Formula	Considerations	Example Calculations
8	m = mLL +mDL	The required moment capacity must be less than the actual moment capacity of the selected stringer (Table F-10).(pg F-17)	m = 470.90 + 23.43 = 494.33 kip-feet (Try W24x84, where m=534>494.) (Try W 21 x 73) = 532 > 494
9	VLL per lane: a. Wheeled b. Tracked	Figures A-3 and A-4 (pg A-18) Use the larger value for remaining design procedures.	a. Wheeled = 98 kips. b. Tracked = 118 kips.
10	vLL = 1.15VLL / 2		vLL = 1.15(118) / 2 = 67.85 kips
11	a. One lane: VDL = VDL b. Two lane: VDL = VDL(bR) / 24	VDL from Table A-1. If thebridge is two-lane, determine any width adjustment required.	Two lane: vDL = 18.75(28) / 24 = 21.87 kips
12	vDL = VDL / Ns		vDL = 21.87 / 6 = 3.64 kips
13	vr = vLL + vDL	The required shear capacity must be less than the actual shear capacity of the selected stringer (Table F-10).pg F17	vr = 67.85 + 3.64 = 71.49 kips W24x84- = 150>71.49,GO W21x73 = 188 > 71.49, GO
14	Nb = L / Sb + 1	Sb from Table F-10 pg F-17 (pgF-17) W21x73 = Sb 20.0	Nb = 30 / 20 + 1 = 2.5 braces **3** (if answer is not a whole # Round up to next whole number.)
15	Bearing plate dimensions a. Lp = bc b. bp = 2vr / Lp c. tp = (bp - 2.5) / 8.48	Assume a 12x12-inch cap. Round bp to nearest inch. Round tp to next 1/8 inch. .125 = 1/8" .875 = 7/8" .250 = 2/8" .375 = 3/8" .500 = 1/2" .626 = 5/8" .750 = 6/8"	a. Lp = 12 inches (**Lp = plate length in inches**) b. bp = 2(71.49) / 12 = 11.91 inches (**bp = plate width in inches**) (round answer to 12) c. tp = 12 - 2.5 / 8.48 = 1.12 inches (**tp = plate thickness in inches)** (Round answer to 1.125 inches.) (1 1/8")
16	a. tr>6 in: %lam=(tr / td) 100% b. tr<6 in: td = tr + 2 in Determinr tr from fig 6-9 pg 6-16	a. Use a laminated deck. b. Use a plank deck. For the example, assume 3x12-inch planks are used for deck.	tr = 8.15>6; therefore, use laminated deck. %lam= (8.15 / 12) 100% =67.9% Use 75% lamination from figure 3-15 (page 3-24).
17	Curbs and handrails	Use the standard design in figure 6-13 pg 6-22.	

Rapid Field Design

Timber-Trestle Bent Substructure Design

Bridge Dimensions		**Post Dimensions**		**Cap Dimensions**		**Sill Dimensions** (normally the same as cap dimensions)	
L1 (ft)	30	Type: 8x8		bc	12	bc	12
L2 (ft)	30	SBC (KSF)	8	dc	18	dc	18
MLC	60	dc (in)	18	Footing Material	4"x8" planks	Footing Material	4"x8" planks
NL	1	tft(in)	4	dc = cap depth in inches tft = thickness of footer in inches bc = cap width			
bR (ft)	16						
hb (ft)	20						

Procedure

Step	**Formula**	**Considerations**	**Example Calculations**
1	Le = L1 + L2		Le = 30 + 30 = 60 feet
2	hb (**bent height in feet**)	Buckling check. hp must be less than or equal to the maximum allowable bent height from Table E-3,pg E-5 or braces are required.	hb = 20 feet≤20 feet Do not need to add bracing.
3	VLL per lane: (**Live load shear per stringer**) a. Wheeled b. Tracked	Figures A-3 and A-4. pg A-18 Use the Le to determine VLL. Use the larger value for remaining design procedures.	a. Wheeled: VLL = 103 kips b. Tracked: VLL = 103 kips
4	a. Span 1: VDL1 b. Span 2: VDL2	Use L1 and L2 from Table A-1. pg A-14	a. Span 1: VDL1= 12.15 kips b. Span 2: VDL2=12.15 kips
5	V'DL=VDL1 + VDL2		V'DL=12.15 + 12.15 = 24.30 kips
6	a. One lane: VDL = VDL b. Two lane: VDL = VDL ($\frac{bR}{24}$) 24.30 x $\frac{16}{24}$	If the bridge is two-lane, determine any width restriction required.	One lane: VDL = 24.30 kips **STEP 5**
7	P = VLL(NL) + VDL	**Total design load**	P = 103(1) + 24.30 = 127.30 kips

Step	Formula	Considerations	Example Calculations
8	Ppc (**Post capacity**)	Table E-3 pg E-5	Ppc = 32 kips
9	Npr = P / Ppc (**Number of posts required**)	Use 0.5P for a two-bent pier.	Npr = 127.30 / 32 = 3.98 **Step 7** / **Step 8** (Round answer to 4 Npr.)
10	Sp = bR(12) / Npr-1 16 x 12 = 192 / 3 = 64 (**Post or Pile spacing in inches**)	Maximum spacing is 5(dc). Add posts or use a larger cap, if necessary. **dc = cap depth**	Sp = 16(12) / 4-1 = 64 inches (5dc = 5 x 18 = 90 inches OK because 64 < 90.)
11	Footing length factor: K	Figure D-1 pg D-3	xL = 23 inches
12	Lf = xL + bc		Lf = 23 + 12 = 35 inches
13	FBf = Lf(bft) / 144 (SBC)		FBf = 35(8) / 144 (8) = 15.55 kips
14	Nf = P / FBf Step 7 / Step 13 (**Number of footings**)	Use 0.5P for a two-bent pier. Minimum Nf equals number of posts per bent.	Nf = 127.30 / 15.55 = 8.18 footers **9** (Round up to next highest whole #)
15	Sf = 12bR / Nf - 1 (**Footing Spacing**)		Sf = 12 (16) / 9 - 1 = 24 inches

REFERENCE (S):

FM 5-446 Military Nonstandard Fixed Bridges

FM 5-34\MCRP 3-17A Engineer Field Data

UNITED STATES MARINE CORPS

MARINE CORPS ENGINEER SCHOOL
COMBAT ENGINEER INSTRUCTION COMPANY
PSC BOX 20069
CAMP LEJEUNE, NORTH CAROLINA 28542-0069

C-23E01
5 June 00
(POI 96)

STUDENT HANDOUT

CRRC REPAIR

LEARNING OBJECTIVES:

a. Terminal Learning Objective: Provided with a Combat Rubber Reconnaissance Craft, applicable tools, repair materials, repair the craft in accordance with TM – 09665A –13&P/1-1. (1342.2.22)

b. Enabling Learning Objectives:

(1) Provided a Combat Rubber Reconnaissance Craft with a defective Halkey – Roberts over pressure relief valve, applicable tools, and repair material, with the aid of references, repair the relief valve in accordance with TM-09665A-13&p/1-1. (1342.2.22a)

(2) Provided a Combat Rubber Reconnaissance Craft with rips or tears, applicable tools, and repair material, with the aid of references, repair the rips or tears in accordance with TM-09665A-13&P/1-1. (1342.2.22b)

OUTLINE

1. NOMENCLATURE:

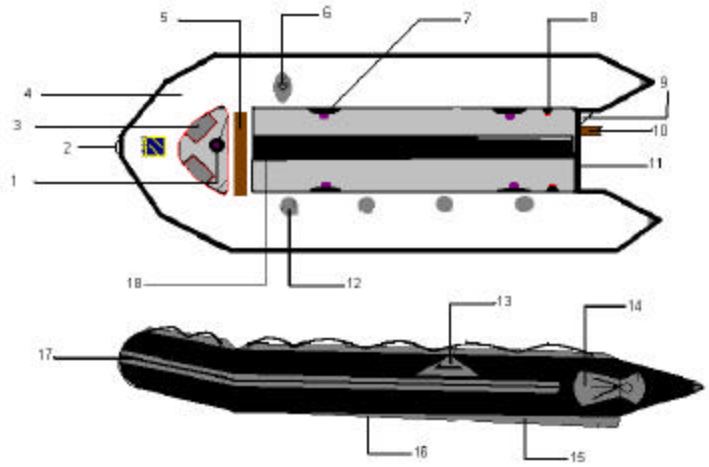

1.
2.
3.
4.
5.
6.
7.
8.
9.
10.
11.
12.
13.
14.
15.
16.
17.
18.

2. INTERCOMMUNICATING VALVE CLEANING FREQUENCY: The four intercommunicating valves must be cleaned and lubricated every _____ or whenever they become difficult to operate. This procedure is performed by second echelon maintenance personnel.

(1) Turn the flywheel on each of the four intercommunicating valves to the 6 o'clock position (indicating arrow points to the green area marked NAVIGATION).

NOTE: The craft must be deflated to clean and lubricate the intercommunicating valves

(2) Remove the metal valve cap and metal valve insert from the first intercommunicating valve, and using the 10 mm socket (Place grease in the end of a 10-mm deep well socket), remove the lock nut in the center of the valve opening.

NOTE: Valve parts are not interchangeable, use a partitioned tray to keep all parts of 1 valve together.

(3) The base nut is not removed. The only time you will remove the base nut is when a leak is coming from the base nut gasket and it needs replaced. You will then use the base nut spanner wrench to remove the base nut. To reinstall the base nut, hand tighten and then using the spanner wrench to turn it ¼ more turn.

(4) Turn the valve flywheel back and forth while pulling straight outward to remove the male valve body. If unable to remove the male valve body, use the valve extractor tool (part# 7034) to remove the valve. Exercise care to avoid the spring and spring washer from falling into the buoyancy tube. The spring and washer will fall into the bottom of the male portion of the valve.

(5) Clean the spring, spring washer, and lock nut by immersing in toluene and scrubbing with a bore brush.

(6) Clean the male valve body of the intercommunicating valve with toluene to remove all grease and dirt. Use a brush only on the inside. The outside is cleaned by using a towel soaked in toluene.

(7) Clean the female valve body, which remains in the buoyancy tube, by using a towel dampened with toluene to remove all grease and dirt. The lower portion can be cleaned by using a brush or a screwdriver wrapped with a shop towel and dampened with toluene.

(8) Apply a light coat of rubbing compound to the outer surface of the male valve body.

(9) Insert the male valve into the female portion.

(10) Manually turn the male valve body, using the flywheel, ten (10) complete revolutions clockwise then counter-clockwise, pressing lightly on the flywheel.

(11) Remove the male portion of the valve from the female portion. Using a clean rag clean the rubbing compound from the valve.

(12) Inspect the valve (male and female portion) for a smooth surface. Take a grease pencil and make a line from top to bottom on the male valve. Place the male portion back into the female portion and turn one (1) complete turn. Remove the male portion and the line should be smudged or worn indicating that the two surfaces are in contact. If the line is still present perform steps (8) – (10) again.

(13) Once the valve is properly reground, remove all rubbing compound and grease pencil marks by wiping with a clean towel dampened with toulene.

(14) Remove the diaphragm by gripping the large end and pulling it out of the valve insert. Inspect and clean the diaphragm. Clean the diaphragm by rubbing it between your finger and thumb to remove any dirt. Inspect the diaphragm for cracks or other indications of deterioration. Lightly stretching the diaphragm while visually inspecting it will reveal any cuts, small holes, or cracks. The diaphragm should be replaced if there is any damage. Diaphragms can be reinstalled if in good condition.

(15) Remove the flat ring-shaped neoprene valve insert gasket from the metal valve insert. Clean the gasket by _____it_____and . Stretch the gasket while inspecting it for cuts and cracks. Gaskets in good condition can be reinstalled. If damaged,

(16) Remove the disk-shaped neoprene valve cap gasket from the metal valve cap. Clean the gasket by rubbing it between your fingers and thumb to remove any dirt. Inspect the diaphragm for cracks or other indications of deterioration. If it is not damaged and only one side of the gasket has circular grooves, the gasket can be reinstalled with the ungrooved side out.

NOTE: The diaphragm is designed to pass a small amount of air for pressure readings. The _____ is the final air seal and must be airtight.

(17) Clean the metal valve insert body and metal valve cap in toluene. Scrub both parts with a brush and rinse in toluene. It is important that the threads are very clean. No lint from the towel should remain on the threads.

(18) Reinstall the cleaned valve cap gasket or a new gasket in the valve cap.

(19) Reinstall the cleaned diaphragm or a new diaphragm in the metal valve insert. Insert the stem of the diaphragm into the valve insert by hand. Then pull it into position using needle nose pliers to grip the stem.

(20) Reinstall the new or cleaned flat neoprene valve insert gasket on the valve insert.

(21) Apply a light coat of grease (OMC Triple guard) evenly over the outer surface of the male portion of the intercommunicating valve. Keep clean until assembly.

(22) Put grease into the end of the 10 mm deep-well nut driver socket and then insert the lock nut into the socket, small end first.

(23) Apply a light coating of grease to the spring and spring washer.

(24) Insert the male valve portion into the female portion verifying that the indicating arrow on the flywheel is at the 6 o'clock position. Rotate the flywheel. Operation of the flywheel must be smooth. If operation of the flywheel indicates grit is present, disassemble and reclean. Any _____ will result in grooving of the mating surfaces and will cause air leaks.

(25) Return indicating arrow on valve flywheel to the position.

(26) Install valve spring washer and valve spring by first slipping them over a screwdriver, then ease the spring and washer into position on the valve stud.

(27) Install the lock nut and tighten until snug using the 10-mm deep socket nut driver. It is necessary to apply downward force against the spring while installing the lock nut. Loosen the lock nut by unscrewing counterclockwise exactly five complete turns. (This operation sets the intercommunicating valve overpressure release to approximately 450 mbar.)

(28) Check the overpressure release function for smooth operation by pulling the valve flywheel away from the craft. When released, the flywheel should return to its original position.

(29) Replace the metal valve insert and the metal valve cap. Tighten each firmly by hand.

(30) Repeat the above procedure for the three remaining intercommunicating valves.

KEEL VALVE CLEANING AND INSPECTION:

a. Cleaning frequency: Clean and inspect every 6 months during periods of craft use. This procedure is performed by second echelon maintenance personnel.

NOTE: This operation must be performed with the keel inflated.

(1) Verify that the keel valve base nut is moderately tight using the collar nut spanner. DO NOT OVER TIGHTEN. If not tight, usually only 1/8 to 1/4 turn of the spanner is required. Over tightening can cause the valve base on the inside of the keel to turn.

(2) Deflate the keel by removing the metal valve cap and metal valve insert.

(3) Remove the disk-shaped valve cap gasket from the metal valve cap. Clean the valve cap gasket by rubbing it between your thumb and fingers. Inspect the valve cap gasket for wear and deterioration. Rings are normally worn into the gasket where they contact the metal valve insert. The gasket may be reused if it does not have circular grooves on both sides. If the gasket has rings worn into it on both sides, it must be replaced with a new gasket. Gaskets that show signs of cracking should also be replaced.

NOTE: Cracking is easier to detect if the gasket is stretched slightly and folded during the visual inspection.

(4) Remove the diaphragm from the metal valve insert by pulling it, large end first, out of the valve insert. Clean the diaphragm by rubbing it between your fingers and thumb. Visually inspect the diaphragm while stretching it slightly. Diaphragms with _____ must be replaced.

(5) Remove the ring-shaped flat neoprene valve insert gasket from the metal insert. Clean by rubbing it between your fingers and thumb. Inspect for cracks while stretching it slightly. Replace if necessary.

CAUTION: Do not allow neoprene parts such as gaskets and diaphragm to come in contact with toluene.

(6) Wash the metal valve cap and metal valve insert in toluene. Clean using a brush. Threads must be very clean. Rinse in toluene.

(7) Clean the metal valve body remaining in the keel using a brush and towel dampened with toluene. Threads must be very clean. Verify that no lint remains in the threads.

(8) The old valve insert diaphragm may be reinstalled if serviceable. Otherwise a new diaphragm must be installed. Replace diaphragm in the metal valve insert. First, insert the stem of the diaphragm by hand, then

use needle nose pliers to pull the stem through valve insert until disk end of diaphragm is seated in place.

(9) Replace the ring-shaped flat neoprene valve insert gasket on the metal valve insert.

(10) Screw the metal valve insert into the valve body until firmly hand tight (do not use tools).

(11) Install the valve cap gasket in the valve cap. If the gasket is being reused, the ring-shaped wear marks should be positioned toward the of the cap.

(12) Inflate the keel to 220-240 mbar.

(13) Replace the metal valve cap onto the keel valve and tighten firmly, hand tight.

3. PRESSURE RETENTION TEST: The first thing that must be done on the F470 is a pressure retention test. This test is done semiannually or whenever an air leak is suspected. The retention test determines if the buoyancy tubes and keel meet specifications for retaining pressure. A craft that does not pass the pressure test will require a leak test and corrective maintenance.

a. Perform the pressure test as follows:

NOTE: Use a shop pressure gauge rather than the pressure gauge supplied in the repair kit. DO NOT lean on or place any weight on the craft during any of the pressure measurements.

(1) Check the keel and buoyancy tube pressure and correct if necessary. The correct pressure for the keel tube is _____. The correct pressure for the buoyancy tube is ____-____ mbar.

(2) Record the exact buoyancy tube and keel pressures at start of test in the space provided in the upper section of each test data sheet. Also enter the test start date, time, and temperature data.

(3) Tighten all valve caps firmly by hand.

(4) Wait _____ and recheck pressures. DO NOT touch any valves or add or release air during this period.

(5) Remove the isolator clamps from the lower buoyancy tube inflation hoses. Remove the metal valve cap from one of the intercommunicating valves, and using the same gauge as in previous steps, firmly insert the gauge into the valve.

(6) On the test data sheets record the exact buoyancy tube pressure at the end of the test. Also record the end-of-test date, time, and ambient temperature.

(7) Remove the gauge and replace the cap.

(8) Remove the metal cap from the keel valve and insert the gauge into the valve opening.

(9) On the pressure test data sheets, record the exact end-of-test keel pressure and the time.

(10) Use the pressure test data sheets to calculate the pressure loss corrected for any difference in ambient temperature recorded. Any craft that losses more than __ mbars of pressure over a __ hour period from either the buoyancy tubes or keel, requires a leak test and corrective maintenance.

(11) Attach the completed pressure test sheets to the equipment repair order (ERO).

b. Perform the air leak test as follows:

(1) Verify that the four intercommunicating valve caps and keel valve cap is firmly hand tight.

(2) Remove the plastic caps from the CO2 overpressure valves.

(3) Remove the flooring.

(4) With the craft right side up, wet the craft using a hose.

(5) Mix a solution of liquid dish soap and water in a bucket.

(6) Use a paintbrush to brush the soap and water solution on each valve. Be sure that the valve and the fabric immediately around it are completely wet and covered with the soap solution. Keep the area wet.

(7) After all valves are wet, return to the first valve and brush it again slowly.

(8) Air leaks will cause bubbles to form. Brushing on the soap solution will also create bubbles. These bubbles will become smaller and disappear. Look for bubbles that grow in size. Bubbles that grow in size indicate air leaks. Small leaks will take longer to form bubbles. Be patient and observe closely. If a small pinhole sized puncture is found, do not assume that it is the only leak; others may exist.

(9) When a leak is located, brush the area again and carefully reclean.

(10) Carefully test the following areas for leaks:

4 - _____Valves

1 - ____ Valve

2 - _____ Valves

2 - _____ Valves

4 - Lower Buoyancy Tube

2 - Lower Buoyancy Tube

(11) Brush the soap solution onto all seams and any repair patches on the fabric. Brush the soap solution over all accessible areas of the buoyancy tubes and keel. Visually inspect for bubbles that grow in size, indicating an air leak. Mark the leak location with a silver pen.

NOTE: In some cases the location of the bubbles may not be the true location of the leak. Air can travel under items such as lacing cuffs or rubbing strakes and emerge some distance from the actual location of the leak. Air can also travel between the layers of the fabric and emerge from worn spots of the fabric.

(12) Turn the craft upside down. Brush the soap solution over all accessible areas.

(13) Visually inspect for any signs of leaks.

(14) Carefully inspect the lower buoyancy tube hose fittings and hose areas, which were not accessible with the craft in the upright position.

(15) After all leaks have been marked with a silver pen, rinse the soap away with water.

(16) Once all leaks have been identified, perform the corrective maintenance for each leak.

4. SPECIAL SHOP PRACTICES FOR CRRC FABRIC REPAIR Repair of the CRRC fabric components requires specialized shop practices. Becoming proficient in these practices requires a thorough knowledge of the materials and processes used to repair the craft. The quality of the repair is very sensitive to the quality of the preparation that precedes the actual repair. The fabric repair practices addressed in this period of instruction include:

1.
2.
3.
4.
5.

A. Fabric Composition and Fabric Cutting. Fabric is the primary material used to construct and repair the CRRC. A knowledge of how fabrics are constructed and their properties is necessary for performing quality repairs. The CRRC is constructed from coated fabrics. A cloth made of nylon or polyester threads is coated with plastic on both sides. Two types of fabrics are used to construct and repair the CRRC; neoprene and strongan. The two different fabrics require different solvent treatments and _____.

(1) Hypalon Neoprene Fabric. Hypalon neoprene fabric is used for the buoyancy tubes and most other components. The fabric threads are coated with hypalon on the outside and neoprene on the inside surface. Hypalon

neoprene fabric is designed to retain air and resist the effects of abrasion, sun, and atmospheric pollutants.

(2) Strongan Fabric. Strongan fabric is used for the craft's rollup floor, inflatable keel, and carrying bag. The threads are coated on both sides with polyvinyl chloride (PVC) plastomers. The molded D-ring assemblies, carrying handles, and bow handles are similar chemically to the strongan fabric and use the same glue and solvent treatment. The large towing D-rings are an exception. They are made from neoprene and are glued using toluene and neoprene glue.

(3) Thread Direction and Fabric Stretch. The direction in which the threads lay in the fabric determines the fabric's stretch characteristics. The threads that run the length of a roll of fabric are called the warp threads. The threads that run the width of a roll are called the weft threads.

(a) Fabric has little stretch when pulled in the direction of the weft or warp threads. Maximum stretch is obtained when the fabric is pulled at an angle of 45 degrees to the threads.

(b) When the fabric is cut into a smaller piece, the direction of the threads must be determined by stretching the fabric with your hands. The direction of maximum stretch is at a 45-degree angle to the threads.

(c) Fabric stretch is necessary when patching the craft in a place that curves in two directions, such as the bow area or the cone ends of the buoyancy tubes. Without stretch in the fabric, the patch will have a wrinkled and puckered appearance and will not be firmly in contact with the craft.

(d) Fabric stretch is _____ for repairing flat areas of the craft, such as the bottom or areas that curve in only one direction, such as the buoyancy tubes near the center of the craft. Patches that will not stretch are referred to as straight cut patched. Patches that will stretch are referred to as bias cut patches.

(4) Straight Cut and Bias Cut Patches. When fabric patches without stretch are required, cut the patch so that the edge of the patch runs in the same direction as the threads. The edge of the patch will run parallel to the edge of the material. When a patch that stretches is required, use a bias cut patch. The edge of a bias cut patch will run at a 45-degree angle to the edge of the material. A bias cut patch has 30 percent more stretch.

(a) Since both straight cut and bias cut patches look the same, it is a good practice to mark the patches. This will allow identifying a bias cut patch without having to stretch it with your hands. When cutting a circular shaped patch, there is no edge to place parallel to the edge of the material; therefore, the circular patch may be cut from anywhere in the fabric. The circular shaped patch will stretch more in the direction of 45 degrees to the threads and less in the direction parallel to the threads; therefore, a circular patch to be applied to an area of the craft with compound curves should be marked before it is cut.

(b) The markings can indicate the direction of stretch (bias direction) or the direction of the threads (warp or weft direction).

B. UNGLUING FABRIC. The practice of ungluing is used to separate the bond between glued fabrics or to remove molded items such as D-ring pads from the fabric buoyancy tube.

1. To unglue a bond between items, apply heat until the glued bond softens and pieces can be peeled apart. A hot air heat gun is used to heat the glue bond. After preparation, items that have been properly unglued and not damaged can be reglued.

2. Incorrect ungluing will damage the fabric. The practice of ungluing requires patience and the correct application of heat. If too much heat is applied, the fabric will burn; and if too little heat is applied, the fabric coating will separate from the cloth (exposing the threads) rather than separating at the glue bond. When ungluing, begin at an edge where the fabric can be lifted to begin peeling.

3. Use the heat gun on one section at a time. Begin by heating and then peeling only a small area of a few square inches until you become familiar with the technique. Direct the heat gun on this area to heat the glue bond.

4. Avoid application of excessive heat. The heat must be applied for a period of time before the glue bond separates without damaging the fabric. The heat gun may be brought closer to the work if it is kept moving to avoid hot spots, which will burn the fabric. Popping sounds or smoke indicate too much heat is being applied. The heat takes time to move through the layer of fabric to soften the glue bond.

5. After applications of heat, begin to lift the edge of the glued fabric. The lifting can be started by using the boning knife to lift the edge or corner of the heated fabric. After the edge has been lifted, continue to apply heat.

6. Use pliers to grip the fabric and continue to slowly peel away one piece of fabric directly off the other.

7. A small amount of force is required to peel away glued fabric, but excessive force should not be used. Excessive force peels away the fabric coating rather than separating the glue bond. Continue to apply heat while peeling until the glue bond is completely separated.

WARNING: Do not touch hot fabric.

Transition: If you took your time and followed directions, you shouldn't have had a hard time removing the fabric. Once the ungluing is done we need to learn how to prepare the fabric for gluing.

C. SCUFFING FABRIC.

1. New hypalon neoprene fabric and all previously glued fabric must be scuffed before gluing. Scuffing removes a very small amount of coating

from the fabric to expose fresh material, which allows it to properly bond with the glue.

2. Strongan fabric and parts made of PVC such as the D-ring pads and carrying handles are not scuffed except to remove old glue.

3. Wooden components must be scuffed lightly to remove the paint and expose fresh, clean wood before fabric can be glued to the wood.

4. Scuffing on very small areas can be accomplished manually using a pumice stone. A pumice stone is included in the repair kit provided with each CRRC. Power tools are normally used for scuffing hypalon neoprene fabric at the repair facility. New hypalon neoprene fabric stock to be used for patching is normally scuffed in large sections prior to being cut into patches. (Strongan fabric is not scuffed)

NOTE: Material should not be scuffed more than 48 hours before gluing since exposure to air causes the freshly scuffed plastic to heal. A small disk sander with a 100 grit-sanding disk is used to scuff large sections of new fabric.

5. Weights placed on the hypalon neoprene fabric stock will keep it flat during scuffing. When scuffing on a hard surface such as a table, a foam pad must be used under the fabric to avoid damaging the fabric. When scuffing an area on the craft, the craft should be inflated to only 180mbar. Small areas are scuffed using a dremmel tool with an aluminum oxide grinding stone. The dremmel tool provides greater control for small areas.

6. Apply the following rules when scuffing:

a. Scuff Light Colored Side. Scuff the lighter colored (charcoal gray) side of hypalon neoprene fabric. Do not scuff strongan fabric except to remove old glue.

b. Scuff Uniformly. Scuff to remove a uniform but small amount of coating from the fabric. Carefully control the angle of the tool, the pressure of the tool against the fabric, and the speed the tool is moved over the fabric. For proper scuffing, a sanding disk should be operated at 8,000-10,000 rpm. The dremmel tool can be operated above 10,000 rpm. The rpm at which tools operate is normally marked on the tool's identification plate.

c. Scuff Methodically. Move the tool across the fabric from one side to the other in a straight line. Make another pass immediately below the previously scuffed area. No line between the two scuffed areas should be visible. Continue until the desired area is scuffed. Do not hurry. Avoid leaving small areas unscuffed.

d. Remove Debris. Use a hand brush periodically to clean the neoprene dust from the fabric so that the fabric is visible.

e. Scuff to Correct Depth. If the surface of the fabric is only lightly scratched, scuffing is insufficient. Some neoprene debris, which appears as black dust, should be visible. If threads within the fabric become

visible, then scuffing is too deep. Fabric that is scuffed to expose fibers will not provide an airtight repair.

f. Inspect Work. Brush away the neoprene dust and inspect the work. Rescuff any areas that were missed if not scuffed to sufficient depth. The dremmel tool can be used to correct these small areas and to scuff the edges of fabric.

g. Remove all Dust. Use a hand brush, vacuum, or compressed air to remove neoprene residue from the fabric.

h. Cleanup. After scuffing, clean up all neoprene residue. Do not allow the residue to contaminate the gluing table or craft. Keep fabric rolled, scuffed surface inside, until it is to be used.

i. Old Glue. When preparing previously glued fabric for regluing, scuff away any old glue. Scuff fabric very lightly to expose fresh neoprene, but never deep enough to expose the nylon threads.

D. GLUING FABRIC. The gluing operation must be conducted very carefully. The strength of the bond is dependent on many factors. The surfaces to be joined must be properly scuffed, and surfaces must be treated with the correct chemical solvent. Glue must be fresh, as indicated by the expiration date marked on the container. Glue and accelerator must be freshly mixed together in the precise amounts, temperature and humidity must be within the limits specified on the glue container, and all containers and brushes must be very clean. The waiting period of five minutes between each step must be carefully timed. Careful quality control is essential.

1. Glue Types and Solvent Types. Two types of glues and solvents are used in CRRC repairs. The type of glue and solvent used depends on type of material being glued. Both glues require the addition of an accelerator, which functions as a hardener.

NOTE: The glue included in the repair kit provided with each craft is intended for field repairs only. Do not use this single component glue for permanent repairs.

(a) Neoprene glue and toluene solvent are used to glue hypalon neoprene fabric. It can be used on the neoprene coated (lighter colored) side of the fabric, on the hypalon-coated side of the fabric, and on wood. It can be used to join any combination of the three surfaces, hypalon, neoprene, and wood.

NOTE: When opening a package of glue, mark the accelerator bottles to indicate which glue they are to be used with. It is difficult to tell the difference between the accelerators for the two different glues (P.N. 7098 accelerator is slightly darker).

NOTE: Accelerator has a useful life of only 24 hours after opening the bottle. It is also degraded by light. Keep it in a dark place until it is needed.

(b) Neoprene glue must be mixed with accelerator in the proportion of 100 percent glue plus 5 percent accelerator over and above the volume of glue (100% glue plus 5% accelerator equals 105% total). The can of glue is marked to indicate thirds of a container. One- third of a container of glue can be mixed with one full bottle of accelerator.

(c) Polyurethane glue and methyl-ethyl-ketone (MEK) solvent are used to glue strongan fabric and molded PVC parts such as the keel, rollup floor, carrying bag, carrying handles, and D-rings (except towing D-rings). Do not use P.N. 7096 glue on neoprene coated fabrics such as the buoyancy tubes, except when one of the Strongan or PVC items identified above is being glued to hypalon neoprene fabric.

2. Mixing Glue. Verify that the glue you are using is fresh. Check the expiration date on the container. Stir the glue to dissolve any solids that settle to the bottom of the can.

(a) Both the PN 7098 (neoprene) and PN 7096 (polyurethane) glues must be mixed with a precise amount of their accelerator before they are used. A clean container should be used to mix the glues. A plastic container can be used providing it withstands toluene and MEK SOLVENTS. A clear plastic container marked in cc's is useful for measuring the 5 % accelerator, which must be added to the glue.

(b) Wooden stirring sticks (tongue depressors) are normally used for mixing the glue with the accelerator. The glue must be stirred for two minutes after the accelerator is added. Mix only the amount of glue you plan to use in 60 minutes. Glue becomes unusable after 60 minutes indoors and after 30 minutes outdoors and must be discarded.

NOTE: Do not add solvent to glue in an attempt to extend its pot life.

(c) The recommended quantity of glue to mix at one time is approximately 160 cc (150 cc glue + 7.5 cc accelerator = 157.5 cc). Keep the glue container covered after mixing to extend the useful life. The accelerator has a useful life of only 24 hours after the bottle is opened. Do not reuse a glue container without cleaning it thoroughly. Always mix glue in a fresh container.

NOTE: Do not attempt to use glue that has passed the expiration date marked on the container. Store glue at a temperature between 40 deg. F and 80 deg. F. Before mixing in the accelerator, stir the glue in the container to mix components that settle to the bottom of the container. Do not attempt to use glue that was mixed more than 60 minutes earlier. Do not use accelerator from bottles which were opened more than 24 hours earlier. Bonds made with old glue will not hold. All old glue must be scuffed off both pieces and the surfaces treated with solvent and reglued.

3. Application of Solvent. After the surfaces to be glued have been scuffed, they must be treated with solvent. The correct solvent for the materials and glue must be used. Toluene is the solvent used to treat hypalon neoprene fabrics (buoyancy tubes) and wood, MEK is the solvent used to treat PVC coated fabrics such as the strongan (rollup floor, carrying bag, keel) and

the molded PVC parts such as bow handles and D-ring pads (except towing D-rings).

(a) The solvent is applied using a clean, lint free paper towel. The towel should be moderately wet with solvent (the towel has sufficient solvent when it does not drip, but wringing it releases solvent). The solvent is applied thoroughly to both surfaces to be glued by rubbing briskly with the solvent dampened towel.

(b) Application of the solvent is an important part of the gluing process. The solvent softens the fabric coating and opens the pores in the material, allowing it to accept and chemically bond with glue.

(c) Keep solvent containers tightly closed. A squeeze bottle of solvent resistant plastic is normally used to dispense solvent in the work area. The small opening reduces evaporation. Mark the squeeze bottle with the solvent name.

(d) Avoid breathing solvent vapors. Remove solvent soaked towels from the work area as soon as possible to reduce the concentration of toxic vapors. Avoid prolonged solvent contact with the skin. Solvent and glue vapors are heavier than air and will accumulate near the floor.

4. Application of Glue. For general patching, the craft should be inflated to 180 mbar rather than the normal 240 mbar.

(a) Glue is applied to the two surfaces being joined using a modified paintbrush. Modify the paintbrush by cutting the bristles to a 1-inch length. Use natural bristle brushes. Synthetic bristles may dissolve in the solvents. Rub the bristles and shake the brush to remove any loose bristles before use. Use masking tape to ensure glue is applied only to the areas to be joined. Excess glue must be removed later. When applying masking tape, tape an area 1/8-inch larger than the patch. This will make aligning the patch easier and ensure the edges are well glued.

(b) For neoprene glue, two applications of glue are required, five minutes apart. For polyurethane glue, three applications are required 5 minutes apart. Brush the glue well into the fabric. Apply the glue evenly over the area. A thin and even coat of glue is required. Avoid high points of glue that will be visible under the patch.

(c) Keep the glue container covered as much as possible to extend its useful life. Do not use glue that has started to form a skin on the surface. Do not use glue mixed more than 60 minutes earlier. When working outdoors, mix new glue every 15 minutes. Discard old glue and mix new glue in a clean container. Clean the brush in solvent between applications of glue. Shake solvent from the brush before gluing. Avoid contaminating the surfaces to be glued with lint, dust, or neoprene residue left from scuffing.

NOTE: Wooden components require three applications of glue. The first application tends to partially soak into the wood grain.

5. Joining the Surfaces. The surfaces may be joined, five minutes after the second application of glue (third application for

polyurethane glue). First, remove masking tape and then test the glue by touching it lightly with your fingertip. It should not pull away from the surface.

NOTE: A complete cure of the glue requires 7 days. The craft may be used after 72 hours. Small patches that are nonstructural require less time; 48 hours is sufficient.

(a) If the glue appears stringy in the fingertip test, wait 45 seconds and test again. If the glue does not feel sticky during the fingertip test, it has dried too much and must be reactivated with solvent. The glue must always be reactivated when the relative humidity is higher than 75 percent. When gluing large patches or patches which are difficult to apply, reactivate the glue in small sections as the application progresses.

(b) Reactivate glue by applying a thin coating of the correct solvent using a clean shop towel. Do not scrub the surface with solvent. Simply apply a thin, even coating of solvent. After reactivating with solvent, it is necessary to wait before joining pieces to be glued. The solvent will take a minute or so to soften the glue. The glue may then be stringy in the fingertip test. Additional time will allow glue to reach the correct stage for joining. The correct stage is indicated by the fingertip test. The glue should be sticky to the touch, but strings of glue should not pull away from the surface.

(c) Glazed glue must also be reactivated. Be alert for signs of the glue glazing. Glazing is present when the applied glue turns white. Glazing occurs when the relative humidity is too high, usually outdoors and glazing can occur indoors if an open door allows a humid draft to blow on the applied glue.

(d) When joining the pieces, ensure that they are correctly aligned. Large patches may be rolled up for easier handling and positioning. When patches are rolled, carefully align the edge of the patch with the surface to be patched. Push the patch down lightly at first, and slowly unroll the patch while lightly pressing it into place.

(e) Avoid puckers, creases, and blisters in the fabric. If a crease, pucker or blister appears, lift that area and reapply the patch lightly. When the two pieces of fabric are in position, use a towel dampened with solvent to rub and press the two pieces together. The possibility of creases and puckers is reduced if you rub from the center to the edge.

(f) For small patches, the two pieces must then be firmly bonded into contact with a boning knife. Begin boning in the center of the patch or fabric area. Work from the center to the outside in all directions. This technique minimizes puckers and blisters. When boning, apply heavy pressure to firmly adhere the two pieces of fabric. Bone the entire surface. When sufficient pressure is applied to the boning knife, the surface of the fabric will appear slightly marked. These marks can be removed by wiping the patch with solvent.

(g) Pay particular attention to the edges of the patch. After the patch is firmly in place, excess glue should be removed from around

the edges of the material. Use the pointed end of the boning knife to rub off the glue. Rub the entire area with a shop towel dampened in solvent. This will give the area a finished appearance and remove any marks caused by the boning knife.

(h) Large patches should not be boned down with the boning knife over their entire surfaces. A large patch is first rubbed into contact with a folded shop towel dampened in solvent. Use the towel to apply great force to the fabric to achieve good adhesion. Work from the center to the outside. Apply pressure with the shop towel for 2 minutes. An outer one-inch wide area all around the edge of the patch is boned down with the boning knife.

GLUING the ZODIAC

SCHEDULE FOR GLUING

1. INSPECT MATERIAL TO DETERMINE CORRECT GLUE AND SOLVENT / MATERIAL

2. DETERMINE PATCH TYPE / SIZE

3. CUT PATCH

4. TRACE PATCH OUTLINE

5. APPLY TAPE

6. SCUFF

7. APPLY SOLVENT

8. MIX GLUE

9. WAIT 5 MINUTES

10. APPLY SOLVENT AGAIN (If MEK is the solvent, wait 5 minutes and apply a third time)

11. WAIT 5 MINUTES

12. APPLY GLUE

13. WAIT 5 MINUTES

14. APPLY GLUE AGAIN (For polyurethane glue, wait 5 minutes and apply glue a third time)

15. WAIT 5 MINUTES (cover glue container)

16. REMOVE TAPE

17. TEST GLUE * Reactivate if necessary

18. JOIN FABRICS

19. BONE DOWN

20. CLEAN UP EXCESS GLUE

21. WIPE WITH SOLVENT

22. WAIT FOR GLUE TO FULLY CURE - 12 hours low strength, 48 hours medium strength, 72 hours moderate strength, 7 days fully cured.

* Always reactivate when relative humidity is higher than 75 percent. On large patches, reactivate in sections as you progress. Reactivate with toluene when using PN 7098 neoprene glue. Reactivate with MEK WHEN USING pns 7097, 7096, or 7124 polyurethane glue. NEVER ADD SOLVENT TO GLUE IN AN ATTEMPT TO THIN IT OR EXTEND ITS POT LIFE.

E. PATCHING TECHNIQUES. The majority of CRRC corrective maintenance consists of gluing fabric patches to the craft. Patches are applied to stop air leaks, to prevent further abrasions of fabric that is worn from service, and to stop water leaks. These patching techniques are also applicable to the replacement of the transom and thrust board. Fabric patches applied to these wooden components have a structural function. Patching requires a thorough knowledge of the basic shop practices for fabric repair.

1. Patching Material. The correct fabric, glue, and solvent for the material being patched must be used.

2. Patching Procedures. The patching procedures are applicable to all types of patching:

a. ESTABLISH CRAFT PRESSURE AT 180 mbar

b. DETERMINE CORRECT FABRIC, SOLVENT, AND GLUE

c. DETERMINE PATCH SIZE AND SHAPE

d. DETERMINE BIAS OR STRAIGHT CUT PATCH

e. TRACE PATCH SHAPE ON PATCHING FABRIC

f. CUT OUT PATCH WITH SCISSORS

g. PLACE PATCH ON CRAFT AND TRACE OUTLINE

h. SCUFF PATCH (EXCEPT STRONGAN) AND CRAFT WITHIN TRACING.

i. REMOVE ALL DUST

j. REFER TO GLUING SCHEDULE

3. Patch Size and shape. Patches should extend 2 inches in all directions beyond the area that leaks. The minimum patch that should be applied is a 4-inch diameter circular patch. Patch shape is determined by the shape of the damaged area. Trace the shape on the material using a silver fabric marking pen. Round all corners of patches. Rounded corners are less likely to lift and provide a more professional, factory-like appearance. Bottle tops and container lids can be used to trace uniform rounded corners on the fabric. Use only scissors to cut out the patch. Place the patch on the craft and trace its outline with a silver fabric marking pen. Rectangular patches should be applied so that an edge is parallel to a seam. Both the craft and patch must be scuffed (strongan fabric patches are not scuffed). Tape 1/16-inch outside tracing on craft. Refer to gluing schedule for gluing procedure.

4. Inner Patches. Inner patches must be applied to cuts in an air chamber. A normal outer patch is then applied over the cut. The cut must be at least 4-inches long in order to slip the inner patch into the air chamber. Follow this procedure:

(a) First increase the size of the tear or hole to 4 inches so that the internal patch can be slipped through the tear. To enlarge the size of the tear, always cut away from any seams, D-ring pads, rubbing strakes, carrying handles, valves, or other items.

(b) Trace and cut a patch 2 to 4 inches larger than the tear in all directions

(c) Glue the inner patch in place after tracing the correct position on the outside of the air chamber as a guide. This operation should be done with the craft deflated and the patching area positioned flat on a bench. If possible, glue the patch at its edge first, and then glue the lips of the tear one after the other as you work from edge to edge.

(d) Bone down hard in a direction that pushes the edges of the tear together as much as possible.

(e) Wait 18 hours before testing the inner parch. Inflate the craft to 180 mbar only, and then perform the soap and water air leak test on the patched area.

(f) An outer patch is always applied over an inner patch. If the soap and water test indicates the inner patch is airtight, trace an external patch that is one inch larger on all sides than the inner patch already applied. Apply the outer patch.

5. Patching Tears at Seams. Tears at seams are repaired with an inner and outer patch as described above. Inside seams are covered with a sealing mastic that must be removed by grinding, and an inner patch must be applied. The inner mastic is removed by manually grinding it away with a hand-held pumice stone. The inner patch must be applied. The inner patch is applied as described in above.

6. Large Tears in Buoyancy Tube. Large tears (more than 6 inches long) in buoyancy tubes are repaired using the same procedure used for small

tears. An inner and outer patch is applied as described previously. Some additional considerations follow:

(a) The inner patch must be one large patch. Two inner patches applied next to each other will not be airtight.

(b) Trace the position of the inner patch on the outside of the tube before attempting to fit it. Also trace the position of the tear on the inner patch. The tracing will assist in aligning the patch in its correct position.

(c) Fit the patch without glue first to ensure the patch is the correct size. The patch should extend at least 2 inches in all directions from the tear.

(d) Glue the inner patch into position in two separate steps. First glue the lower lip of the tear onto the inner patch, then glue the upper lip of the tear onto the inner patch.

(e) Smooth down any slight separation between the two edges of the tear by rubbing with a clean towel soaked in solvent.

(f) Beginning at the most difficult end of the tear, assemble the inner patch to the craft with the glue dry. Reactivate the glue with solvent, one section at a time as you proceed.

7. Tear in Buoyancy Tube at a Baffle. Tears that occur at the internal baffles between air chambers are repaired using the technique of applying a single outer patch only. Inner patches are not necessary on baffles since the baffle is not an air seal between the air chamber and the atmosphere.

(a) An unglued or torn flange between the baffle and the inside surface of the tube is glued from the buoyancy tube wall to the baffle itself.

(b) To patch a hole in a baffle or chamber, a patch cut on the fabric bias is used. The patch is placed on one side of the baffle only.

(c) A new or repaired baffle flange will be glued on an internal patch which will fit over the tear. This is one of the most difficult repair operations, in view of the limited working space. The patches should lay flat against the surface and not fold or blister.

(d) The tear will be sealed by gluing onto the interior patch which is not glued on both sides. All scuffing and cleaning with solvent is done in advance.

(e) After waiting 24 hours, test the pressure in the two adjacent air compartments and test the tear for leaks with soap and water. An external patch is then applied which should, if possible, take the shape of a small panel.

5. REMOVE AND REPLACE THE C02 OVER PRESSURE VALVE AND VALVE BASE.

An overpressure release valve is installed on the inboard surface of each main buoyancy tube aft of the C02 inlet valves, to protect the buoyancy tubes from excessive pressure. They can be identified by their circular mesh faces. Commonly referred to as the Halkey Roberts overpressure relief valve, the manufacturers name.

NOTE: The two C02 overpressure valves vent the buoyancy system automatically whenever the internal pressure exceeds 338 mbar.

1. If the C02 overpressure valves fail to seat completely, slap the leaky valve very hard with the palm of the hand. If this fails to seat the valve, install the red plastic cap from the repair kit on the valve. The flat neoprene gasket must be in place inside the red plastic cap to provide a seal against leaking.

NOTE: When tightening the C02 overpressure valves use the plastic socket wrench. Tighten manually. Do not insert a wrench handle in the plastic socket while tightening.

2. When the tubes of a properly inflated craft, have been slightly deflated, the cause could be the overpressure valve relieving pressure. When pounding through rough seas, transient pressure increases will result in sporadic short period activation of the C02 overpressure relief valves. This venting is normal. Indications of an under inflated craft include the following:

a. Abnormal transom movement under engine power.

b. Severe transom indentations into the buoyancy tube fabric.

c. Craft will not plane.

d. Thrust board forms a step in the floor.

e. Craft snakes or belly dances through the water.

3. Perform the air leak test to determine if and where the C02 overpressure valve is leaking. The valve must be removed and replaced to correct air leaks (_____). Most leaks can be corrected by replacing the plastic C02 overpressure valve. The valve must be tight. Use the plastic wrench to tighten. Tighten the valve by using your hand on the plastic socket wrench.

4. If the leak cannot be corrected by following the actions listed above and the leak test indicates the leak is at the hole in the fabric, or the female internal threads in the valve base are damaged, remove and replace the neoprene valve insert base in accordance with TM 09665A-13&P/1-1.

6. REPLACING THE TRANSOM. Repair and replacement of the transom is accomplished by third echelon maintenance personnel. Transoms with small cracks in the wood may be repaired. Transoms that are becoming unglued may be

reglued providing the ungluing is not extensive, and the transom location has not changed. Transoms meeting the following criteria must be replaced:

{ Severe transom cracks and cracks that are visible on both sides of the transom cannot be repaired _____.

{ Transoms that show signs of delamination or of wood or rotting must be replaced.

{ Transoms that are _____ extensively should be removed and reinstalled or replaced.

NOTE: Ungluing at the fabric and wood glue bond is normally caused by operating the craft in an under inflated condition and the wood absorbing water and destroying the glue bond. Water absorption is also the cause of delamination and rotting of the wood. Water absorption can be prevented by maintaining the paint film.

IMPORTANT: The upper and lower buoyancy tubes must be airtight before beginning the transom replacement.

a. Repairing Transom. Repair cracks in the transom by installing 1/8-inch thick stainless steel plates over the entire transom. Fabricate the plates from 1/8-inch thick stainless steel.

(1) First make a paper pattern in the shape of the transom. Use the pattern to mark the stainless steel sheet for cutting. Two plates are required, one inside the transom and one outside.

(2) The plates are secured with stainless steel bolts through the transom. The bolts should be placed approximately every 4 inches. Clamp the plates in position of the transom. Drill the bolt holes through both plates and the transom at the same time. The transom wood _____ Cracks should first be filled with caulking compound to prevent water entry. The transom must be painted .

NOTE: Major ungluing where the transom has moved from its normal position cannot be repaired without removing and replacing the transom. Minor ungluing can be corrected by completely ungluing the affected piece of fabric from the transom.

(3) Prepare the surfaces for regluing by removing all old glue and exposing fresh wood. The wood must be very dry before regluing the fabric. Depending on the amount of moisture absorbed by the wood and the relative humidity, drying the wood can require several weeks in extreme cases. An air-conditioned shop and careful use of a hot air gun and heat lamps can speed the process. After the wood is thoroughly dry, the fabric can be reglued to the wood. The wood must then _____.

b. Transoms Requiring Replacement. Transoms with severe cracks and transoms which show signs of delamination or rotting must be replaced with a new transom. The new transom is 40 mm thick and must be used to replace the 30-mm transom on older craft. Transoms which become unglued due to water absorption into the wood may be removed, dried thoroughly and reinstalled provided

delamination or rotting are not present. Removing and replacing a transom requires a thorough knowledge _____ The following steps must be carefully observed to ensure the transom is located precisely in its correct position:

(1) When replacing a 30-mm thick transom with a 40-mm thick transom, the additional 10-mm should extend ___ toward the buoyancy tube cone ends.

(2) Before the transom is removed, determine if the transom to thrust board distance requires change.

(3) Unless otherwise specified, the craft must be kept at a constant inflation pressure during the repair (main buoyancy tubes 240 mbar).

(4) Before the transom is removed, use an indelible ink pen (resistant to toluene) to mark the location of the transom high on the buoyancy tubes. Some laundry markers designed to resist dry cleaning fluid are suitable for marking. Mark the transom location lines above the area that will later be scuffed and glued.

(5) During transom installation, use a silver pen to continually retrace the markings for the transom and patch locations as they are removed by the application of toluene. The silver markings are in addition to the indelible pen markings high in the buoyancy tubes.

(6) The transom is not installed at a 90-degree (vertical) angle. The top of the transom angles back approximately _____. This angle is necessary to accommodate different outboard engine mounting brackets.

(7) After replacing the transom do not use the craft for 72 hours to allow the glue to form its full bond strength and the paint to dry thoroughly.

7. REPLACING THRUST BOARD. Thrust boards that show signs of rotting, or are unglued extensively must be replaced. A thrust board with cracks completely through the wood or that shows signs of rotting must be replaced with a new thrust board. A new thrust board_____thus simplifying installation.

NOTE: The procedures in the TM must be carefully observed to ensure the thrust board is located precisely in its correct position. The port and starboard side of the thrust board's aft edge must be aligned with the buoyancy tube seam.

NOTE: Perform the procedures for the ridged flooring tightness test (TM 09665A-13%p/1-1, Chapters 6-5 & 7-5) to determine if the transom to thrust board measurement requires change. The craft must be kept at a constant inflation pressure during the repair; buoyancy tubes 240 mbar. Therefore, it is necessary to make any necessary buoyancy tube repairs before proceeding with thrust board replacement.

a. Preparing Craft for Thrust Board Removal.

b. Removing the Damaged Thrust Board.

c. Preparing for Thrust Board Installation.

d. Installing the Thrust Board.

8. RESTORING AIR TIGHTNESS. After a craft has been in service for an extended period of time, it may not pass the 24-hour pressure retention test due to numerous small air leaks occurring at many places on the craft. Widespread pinholes are corrected by filling the pores in the buoyancy tubes with a latex rubber compound.

NOTE: The following mixture is used for latexing: 1/2 liter latex and 1/2 liter of water. Thoroughly mix the latex and water. The mixture should remain homogenous. A quantity of 1000 cc per compartment is required.

Latexing Procedures

(1) Deflate all buoyancy tube compartments (or keel) to be latexed and remove the metal valve inserts from the intercommunicating valves. Remove the lower buoyancy tube inflation hose isolation clamps.

(2) Turn the intercommunicating valves to the position. Look inside the valves to verify that the windows in the valve are aligned. Insert a 3-foot length of 5/16-diameter plastic tubing into the valve and through the aligned windows into the buoyancy tube air compartment.

(3) Attach a funnel to the opposite end of the tubing.

(4) Pour 1000 cc of latex and water mixture into the funnel and allow all of it to flow into the air compartment.

(5) Repeat steps (2) through (4) for each compartment to be latexed. Immediately clean the tubing and funnel with water.

(6) Install red plastic caps over CO2 overpressure valves.

(7) Replace the metal valve inserts in the intercommunicating valves and inflate each compartment to 350 mbar.

(8) Turn the craft in all directions several times so that the latex flows all over the interior surfaces and is forced into the fabric pinholes by the air pressure. Concentrate efforts on directing the latex to
.

NOTE: Occasionally, small amounts of latex will pass through the fabric pinholes and appear on the outside of the craft.

(9) Wait 30 minutes and repeat step(8).

(10) Repeat step (8) a minimum of 5 times over 2 hours.

(11) With the latex still in the tubes, perform the 24-hour pressure test. If the craft passes the test (less than 30-mbar loss), proceed to step 12. If the craft fails the test, repeat steps (8) through (10) and
.

(12) The latex mixture must now be removed from the craft. Place the craft in a position that allows the excess mixture to collect in a pocket near the valve so it can be pumped out.

(13) Deflate the compartment. Exercise care to ensure the sides of the compartment do not stick together. Remove the valve insert.

(14) Insert the 3-foot length of tubing through the valve into the compartment. Attach a hand operated bilge pump to the other end of the tubing. A reducer may be required to attach the tubing to the pump.

(15) Pump out the remaining mixture.

(16) Repeat steps (10) through (13) for each compartment being latexed.

(17) Immediately rinse the tubing and pump with water.

(18) Immediately dismantle, clean, and lubricate the intercommunicating valves. Remove and clean the CO_2 overpressure valves (they will be blocked with latex).

(19) Blow air through the latex compartments for 10 minutes; repeat blowing air at least five times over a one-hour period. Continuous airflow is more effective. Blowing air through the compartment is accomplished by attaching one or two inflation blowers or other source of air to the valves at one end of the craft and removing the valve inserts at the opposite end of the craft. All other intercommunicating valves should be in the INFLATION (12 o'clock) position. The continuous airflow through the chambers will dry out the remaining latex.

(20) Reinflate the craft to 240 mbar for 48 hours before deflating and folding.

REFERENCE:

TM 09665A-13&P/1-1
MCO P4700-15/1_
Applicable MSDS Sheets

UNITED STATES MARINE CORPS
MARINE CORPS ENGINEER SCHOOL
COMBAT ENGINEER INSTRUCTION COMPANY
PSC BOX 20069
CAMP LEJEUNE, NORTH CAROLINA 28542-0069

C-23EO6
6 June 00
(95 POI)

STUDENT HANDOUT

35D IMARS OUTBOARD MOTOR

LESSON PURPOSE:

To familiarize the student with the, nomenclature, characteristics, capabilities, and SL-3 requirements, before during and after operation checks for the 35 HP outboard motor.

1. PRINCIPLES OF OPERATION OF THE TWO CYCLE OUTBOARD MOTOR

a. The two-cycle outboard motor uses a pre-mixed two-cycle oil and gasoline, both for fuel and lubrication at a ratio of 50:1 stored in its fuel bladder.

b. Intake and Exhaust Ports. In this engine the intake and exhaust ports are placed in the cylinder wall instead of in the combustion chamber.

c. Cycle of Operation.

(1) Two cycle engines operate on the principle that it takes the crankshaft ____ complete revolution to complete the cycle of events.

(2) The first event is_____ and_____

a. The upward movement of the piston creates a vacuum or suction below the piston inside the crankcase. A leaf valve mounted behind the carburetor is forced open by the vacuum pressure, allowing the air-fuel and oil mixture to be drawn from the carburetor into the engine crankcase. Since the air-fuel and oil mixture must pass through the engine crankcase, every moving part in the engine is being _____ at the same time.

b. As the piston moves upward the air-fuel and oil mixture passes through the _____ _____ _____ and into the cylinder. This is intake.

c. As the piston moves further upward, the intake bypass port is closed off allowing no more fuel to enter and then the _____ _____ is closed off. When both ports are closed, the fuel-air and oil mixture is _____.

(3) The second event is _____ and _____.

a. As the piston reaches top dead center, a _____ ignites the air-fuel and oil mixture and the piston is forced downward. This is _____.

b. When the piston moves downward pressure is created in the crankcase forcing the leaf valve to _____. At this time ,the air-fuel and oil mixture is completely blocked from entering the engine.

c. As the piston moves further downward and uncovers the _____ _____,the burnt gases are exhausted. As the piston moves even further downward near bottom dead center, the intake bypass port will also be _____. The air-fuel/oil mixture that was not burned is forced through the intake bypass port and into the cylinder, _____ _____ _____ _____. This is also called _____. Scavenging continues until the piston passes bottom dead center and covers both ports in its upward movement as the cycle is repeated.

(4) Every downward stroke of the piston is a _____ and _____ stroke.

a. This type of engine does not need as many _____ _____ as other engines.

2. THREE MAJOR COMPONENTS OF THE OUTBOARD MOTOR

a. Powerhead

(1) The _____ section contains the powerhead. It includes the starter, electrical components and controls.

(2) The manual starter is mounted on the cylinder block over the _____. The flywheel rotates under the starter.

(3) Located Under the flywheel are the _____ _____ and _____ _____ components. It is mounted on a plate and is fastened on the cylinder block and can rotate clockwise or counterclockwise a very _____ _____. This movement will either _____ or _____ the ignition timing. The charge coil generates _____ that is sent into the power pack then is changed to _____ to provide current for the spark plug.

b. Midsection

(1) The midsection is the powerhead and lower unit. It contains the swivel bracket, _____ _____, _____ _____ _____, gearshift and its linkages, and the hand twist throttle and its linkages.

c. Lower Unit

(1) The lower unit contains the _____ _____ and is driven by the _____ _____.

(2) Below the water pump housing is the _____. It contains the forward and reverse gear and its linkages and also the _____ _____ to which the pump jet rotor is mounted.

(3) The rotor housing is _____ _____ to the gearcase and it is not replaceable. The _____ is installed directly onto the propeller shaft exactly the same way as a _____ _____.

(4) The powerhead provides the horsepower to turn an axial flow turbine rotor which is enclosed in the rotor housing and _____ housing shell. Water is _____ into the front of the rotor housing by the rotor and is _____ at a high velocity out of the stator housing causing the boat to accelerate through the water.

(5) The _____ _____ are vented out above the _____ _____.

3. COMPONENTS OF THE CAPACITOR DISCHARGE (C.D.II) IGNITION SYSTEM

a. Flywheel Assembly - The flywheel contains _____ _____ cast into the flywheel _____ _____ apart. These magnets are magnetically charged of opposite _____. Once the flywheel exceeds a minimum cranking RPM, either by rope or electric starter, the flywheel _____ _____ of force passing through the _____ coil and coil windings produce voltage in those circuits.

b. Charge Coil Assembly - The charge coil consists of a coil of wire wrapped around a metal core that is laminated. It is mounted to the _____ _____. Once the flywheel exceeds a minimum cranking RPM, the flywheel's magnetic lines of force cutting through the charge coil windings produce between _____-_____ volts of alternating current. This voltage is supplied to the power pack to operate the _____ _____.

c. Sensor Coil Assembly - The sensor coil consists of a small coil of wire wrapped around a metal core that is laminated. Once the flywheel exceeds a minimum RPM, the flywheel's magnetic lines of force cut through the sensor coil _____ , producing approximately ___ _____ _____.

d. Power Pack Assembly (C.D. II) - The power pack has four functions.

(1) Rectifies AC to DC (Rectifier Bridge)

(2) Stores DC current (capacitor)

(3) Distributes current (SCR's)

(4)Provides a means to ground the ignition system.(Through the kill cord.)

[a] The power pack receives it operating voltage from the _____ _____ and converts it into direct current (DC) by a series of _____. A diode is a component that allows current to flow in one direction only.

[b] The power pack stores this direct current into the _____. A capacitor is a component that stores electrical current. One end of the capacitor is positive (+), and the other end is negative (-). The voltage is stored until the _____ _____is activated.

[c] The power pack uses a series of electronic switches (_____), activated by the _____ _____ _____, to select the correct ignition coil. The power pack has _____ SCR (silicone controlled rectifier) for each ignition coil it controls.

e. Ignition Coil - Consists of _____ _____ of wire wrapped around a metal core that is laminated. The coil has _____ and _____ terminal connections and a _____. Through mutual induction, the ignition coil transforms power pack output (_____ - _____ _____) to as much as _____volts to fire the spark plugs.

f. Stop Button - The stop button is _____ to the _____ _____ to provide a means to _____ the ignition system. The stop button circuit is connected internally to the power pack's _____. When activated, the stop button sends the capacitor's output to the _____, stopping the ignition system. (or grounding the ignition system)

4. Synchronizing The Throttle Cam With The Spark Advance

a. Connect a throttle shaft amplifier to the carburetor throttle shaft.

b. Advance the throttle by moving the throttle lever until the tip of the amplifier begins to move. At this point, the cam should contact the cam between the two marks on the armature plate.

5. Maximum Spark Advance Adjustment

NOTE: Run the engine with the correct test wheel. Do not run the engine with a propeller or a flushette for this adjustment.

a. Connect a timing light to the #1 cylinder. Start and run the engine at full throttle in forward gear.

b. The timing mark on the starter housing must align with the timing mark on the flywheel grid. The maximum spark advance is 30 + - 1 degree.

c. To adjust, stop the engine and loosen the timing screw nut. Turn the screw in or out as necessary to correct the timing. One turn clockwise retards the timing 1 degree.

d. Tighten the nut and recheck the timing adjustment.

REFERENCE(S):

TM- 9-8000
OMC Service Manual
TM 08509B-14

UNITED STATES MARINE CORPS
COMBAT ENGINEER INSTRUCTION COMPANY
MARINE CORPS ENGINEER SCHOOL
PSC BOX 20069
CAMP LEJEUNE, NORTH CAROLINA 28542-0069

C-23E07
5 June 00
(95 POI)

STUDENT HANDOUT

BRIDGE ERECTION BOAT

PURPOSE: The purpose of this period of instruction is to provide you with the knowledge and skills to Employ the ribbon bridge and bridge erection boat in their various configurations and to identify the different anchorage systems.

LEARNING OBJECTIVES:

1. TERMINAL LEARNING OBJECTIVES:

a. Provided a mission, a bridge site, bridging equipment, bridge erection boats, trucks, bridge personnel, with the aid of notes and references, while observing safety precautions, maneuver the bridge erection boat to efficiently accomplish ribbon bridge/raft operations. (1371.2.7)

2. ENABLING LEARNING OBJECTIVES:

a. With the aid of references, identify the nomenclature of the bridge erection boat in accordance with TM 5-1940-277-10. (1371.2.7a)

b. With the aid of references, identify the characteristics and capabilities of the bridge erection boat in accordance with TM 5-1940-277-10. (1371.2.7b)

c. Provided a bridge erection boat, with the aid of references, perform operator maintenance on the bridge erection boat in accordance with TM 5-1940-277-10. (1371.2.7c)

d. Provided a bridge erection boat and a MK 48/18 ribbon bridge Container/hauler, with the aid of references, as a member of a team, launch the bridge erection boat in accordance with TM 5-1940-277-10 and TM 2320-10/11 (1371.2.7d)

e. Provided a bridge erection boat and a MK 48/18 ribbon bridge Container/hauler, with the aid of references as a member of a team, retrieve the bridge erection boat in accordance with TM 5-1940-277-10 and TM 2320-10/11 (1371.2.7e)

OUTLINE

1. **BRIDGE ERECTION BOAT (BEB)**: The BEB is a transportable, hydrojet propelled, aluminum hull boat designed to maneuver components of floating bridges. It also can be used to move rafts, support diving operations, assist in maritime construction projects, serve as a troop and cargo carrier and patrol inland waters.

a. Capabilities:

(1) The BEB can safely carry 12 fully equipped Marines plus three crew members.

(2) It can rotate on its own axis at low engine speeds.

(3) It is all weather operational.

(4) It is transportable by rail, road, sea, and air.

(5) It has positive flotation.

b. Major Components of BEB:

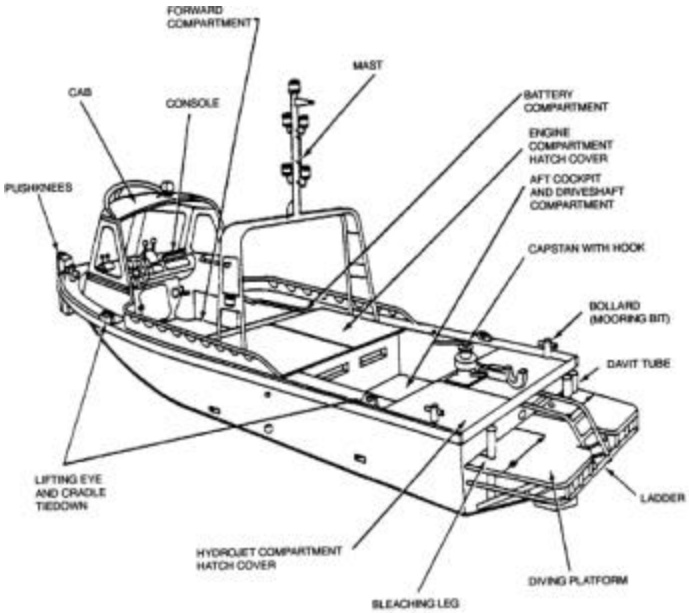

(1) Cab. It is an aluminum frame with windows that provides cover for the crew during bad weather.

(2) Console. Contains all the control and indicators required to operate the boat.

(3) Pushknees. It provides the front of the boat with a flat vertical surface to push or maneuvering bridge components.

(4) Forward Compartment. Is where the crew and operator stand.

(5) Mast. Contains all of the lights to maneuver the boat at night, Navigation, towing, anchor and steaming lights.

(6) Battery Compartment. Has four 12 volt batteries to start and run the boat, a fuel tank master switch and hour meter.

(7) Engine Compartment. Has two 212 saber diesel engines that provides power to the hydrojets.

(8) Aft Cockpit. Is where the additional Marines are located when moving Marines from point A to point B.

(9) Capstan Handle with Hook. Provides the boat with a safe towing capability of 4000 pounds. It also has a quick release mechanism.

(10) Hydrojet Compartment. Contains the two hydrojets which propulsion units propel the boat and steer it.

(11) Bollard (Morning Bit). Is used to tie lines to the boat and to secure it to the dock.

(12) Beaching Legs. Support the boat in an upright position when it is not in the cradle.

(13) Keel Cooler. Provide cooling for the engine, transmission, oil, and turbocharged air and is located on the bottom of the boat.

c. Forward Cockpit and Control Console:

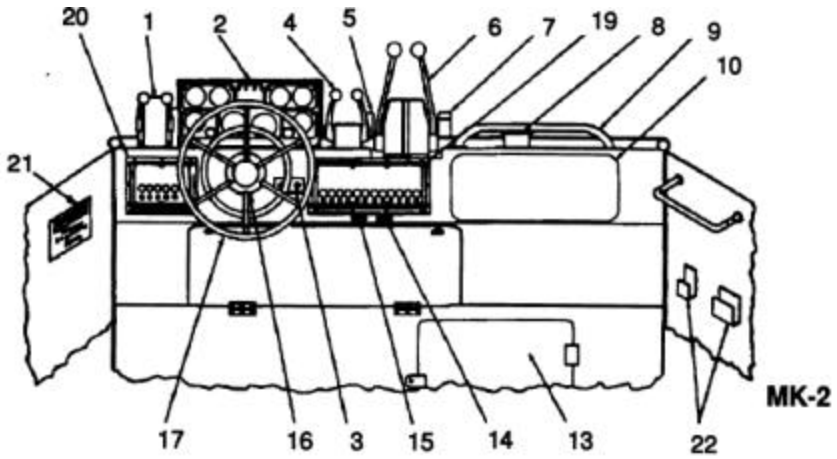

(1) Transmission Selector Lever. Allows operators to place individual gear in forward, neutral, and reverse positions.

(2) Engine Instrument Panel. Contains oil pressure gages, engine water temperature gages, engine tachometers, battery condition meter, ignition switches, and warning lights.

(3) Engine Alarm Mute Switches. Allows operator to turn off engine audible alarm. (Indicates low engine oil pressure or high water temperature.) On MK2 model switch is relocated to the left of switch panel unit 1.

(4) Engine Throttle Controls. Allows operator to control the revolutions per minute (rpm) of each engine.

(5) Cab Electrical Connector. Provides electrical connection for cab windshield wipers and searchlight.

(6) Scoop Control. Allows operator to control direction of output from hydrojet to obtain forward and reverse direction of boat. May also be used to assist in turning boat and controlling speed.

(7) Searchlight Socket. Provides electrical connection for searchlight when cab is removed.

(8) Searchlight Mounting. Provides mounting for searchlight when cab is removed.

(9) Handrail. Provides a safety rail.

(10) Map Locker. Provides stowage space for technical manuals.

(11) Storage Locker. Provides a lockable stowage compartment for life jackets and other equipment.

(12) Caution Plate. Indicates to operator that hearing protection is required for noise pollution (MK2 only).

(13) Hatchet Bracket. To secure hatchet for emergency use (MK2 only).

(14) Engine Stop Control, Starboard. Stops the starboard engine when pulled out.

(15) Engine Stop Control, Port. Stops the port engine when pulled out.

(16) Scoop Position Indicator. Provides a means for the operator to position the scoops for straight ahead movement of the boat.

(17) Steering Wheel. Used to steer the boat.

(18) Switch Panel Unit 1. 12 circuit power panel contains electrical switches for cabin lights, inspection light, mast light, wipers (port and starboard), emergency battery link, and searchlight (MK2 only).

(19) Switch Panel Unit 2. 6 circuit power panel contains electrical switches for forward and aft bilge pumps, auto control of bilge pumps and horn (MK2 only). Engine room blower is not used.

d. Equipment Data

(1) Weights and Dimensions

(a) Operating

1	Weight, w/crew, equipment and fuel	8800 lbs (4000 kg)
2	Length	322.8 in (820cm)
3	Beam	98.0 in (249 cm)
4	Height	
a	w/o cab or mast	77.9 in (198 cm)
b	0 w/cab	109.8 in (279 cm)
c	w/cab and mast	177.9 in (452 cm)
5	Draft	
a	w/crew, equipment and fuel	22.0 in (56 cm)
b	fully loaded	26.0 in (66 cm)

(b) Transported, w/cradle

1	Weight	10800 lbs(4909 kg)
2	Length	326.4 in (826 cm)
3	Height w/o cab	96.3 in (244 cm)
4	Width	116.3 in (294 cm)

(2) Performance

(a) Speed, w/crew, equipment and fuel	21.6 mph(40km/hr)
(b) Speed, fully loaded	16.2 mph(30km/hr)
(c) Maximum load carrying capacity	4400 lbs(200 kg)
(d) Towing hook	4400 lbs(200 kg)

(e) Turning radius (with scoops at maximum thrust)

1 Full speed ahead 2 boat lengths in 15 seconds

2 Full speed astern 2 boat lengths in 25 seconds

3 one scoop forward and one scoop in reverse standing circle

(3) Fuel consumption (approximate)

(a) 1750 rpm	2.8 gallons/hour (11 liters/hour)
(b) 2000 rpm	4.2 gallons/hour (16 liters/hour)
(c) 2250 rpm	6.0 gallons/hour (23 liters/hour)
(d) 2450 rpm	10.8 gallons/hour (40 liters/hour)

1 Maximum forward thrust 3600 pounds (16 kN)

2 Maximum reverse thrust 2200 pounds (8.8 kN)

3 Maximum safe 2800 rpm engine operating speed (No load governing setting)

4 Capacity

a Fuel 75 gallons (280 liters)

(4) Engine Instrument Panel gauge readings:

(a) Tachometer

1 rpm idle speed	650 to 750
2 rpm operating speed	1000 to 2000
3 rpm maximum speed (under load)	2500 rpm engine

(b) Oil pressure gauge

1 idle speed	20 to 30 psi
2 operating speed	40 psi or above

(c) Coolant temperature gauge (fresh water)

1 normal	below 195 F
2 Overheating	above 195 F

(d) Battery condition meter (eng. not running, no elec. load)

1 Battery fully charged 25.4 volts or above

2 Battery half charged 24.6 to 25.3 Volts
3 Battery fully discharged 23.7 volts or below

e. Pre Operational Checks: This is a necessity to ensure the boat is fully operational during the pre op check if you run across a condition that makes the boat not operational, do not stop your check, complete all checks so that if any other conditions exist they can be corrected at one time.

(1) Special Instructions:

(a) Leakage definitions:

1 Class I- Seepage of fluid (as indicated by wetness or discoloration) not great enough to form drops.

2 Class II- Leakage of fluid great enough to form drops but not great enough to cause drops to drip from the item inspected.

3 Class III- Leakage of fluid great enough to form drops and drop to the deck. This **deadlines** the equipment

NOTE

Equipment operation is allowable with minor leaks (class I and II). Consideration must be given to fluid level on the item/system being checked/inspected. When in doubt, notify your NCOIC. When operating with leaks continually check fluid levels.

(2) Conducting check: When conducting a check, the first thing to do is make a 360 around the boat to check the hull (if the BEB is in the cradle) and the body for dents, cracks or any damage that may cause an unsafe condition. Once the 360 is completed, start from the rear of the boat and work forward.

(a) Turn the steering control shaft grease cap 3/4 turn clockwise on port and starboard

(b) Turn the scoop control shaft grease cap 3/4 turn clockwise on the port and starboard.

(c) turn the aft grease cap 3/4 turn clockwise.

(d) Turn the forward grease cap 3/4 turn clockwise

(e) Check the forward bearing oil reservoir, it should be at least 1/2 full with no contamination.

(f) Check the hydrojet grill for debris.

(g) Make sure the capstan and hook rotates freely and has handle.

(h) make sure the tow hook quick release works and moves freely.

(i) Check water level in radiator, it should be 1" below cap.

(j) Check engine oil level- cold check.

(k) Check transmission oil level - cold check.

(l) Check drive belts, they should have no more than 1/4" play.

(m) Check the engine breather trap, make sure there is no oil present. if water is present drain.

(n) Make sure fuel water separator is free of water, if water is present drain.

(o) Check all three fire extinguishers on board, make sure glass on engine extinguishers is not broken and all three have not been discharged.

(p) Check fuel level, it should never be less than 1/4 full.

(q) Make sure battery cables are connected.

(r) Turn master switch clockwise until it stops.

(s) Check hour meter, annotate hours on conlog.

(t) Turn engine circuits on.

(u) Ensure audible alarm sounds when moved.

(v) Check battery condition, voltmeter should read above 25 volts.

(w) The generator warning light, and low oil pressure warning light should come on.

(x) Check the horn, make sure it sounds.

(y) Make sure transmission controls move in all positions.

(z) Steering wheel should move freely to right and left.

(aa) The engine throttle control should move freely forward and back.

(bb) The scoop control levers should move freely but not loosely.

(cc) Check anchor light, towing light, steaming lights and port/starboard navigational lights. Make sure lights are functional and all colors are correct.

h. Starting procedures under normal conditions:

(1) Turn the master Battery switch on by turning the switch clockwise until it stops.

(2) Set the throttle controls for half speed.

(3) Make sure transmission is in neutral.

(4) Push engine stop controls all the way in.

(5) Set the Engine circuit switches on.

(6) Push starter button on port engine until engine starts (approximately 10 seconds).

**** CAUTION ****
IF THE ENGINE FAILS TO START AFTER 30 SECONDS RELEASE THE STARTER BUTTON AND LET STARTER MOTOR COOL FOR 2 MINUTES

(7) After engine starts take finger off the starter button.

(8) Pull back on throttle lever until engine idles at 650-750 rpm.

(9) Start starboard engine using the same procedure.

(10) After both engines have been started move away from berth as soon as possible and run engines at 1800-2000 rpm until water temperature is 140-158 degrees Farinenheit.

g. During Operation Checks:

(1) Scoop controls: Operate scoop control levers all the way forward and back. scoop controls should operate freely but not loosely and within full range. Scoops should move with levers.

(2) Transmission: Operate transmission levers all the way forward and back. Levers should operate freely through the full range.

(3) Engine thrust controls: Operate throttle controls all the way forward and back. levers should operate freely and within full range.

(4) Steering wheel: Turn steering wheel to full port and full starboard verify that scoops tilt as wheel is turned. Steering wheel should turn freely through the full range.

(5) Hydrojet Grille: Open hatch cover on hydrojet compartment and secure in place. Loosen hand nuts, remove cover and check grilles for secure mounting, loose or damaged components and water passage for debris. Clean if required.

(6) Forward Oil Reservoir: Visually check that oil reservoir is at least half full and not contaminated.

(7) Capstan and Tow Hook: Check for presence of handle. Check that capstan rotates freely. check that drain holes are clear of foreign debris, check that the tow hook moves freely. Oil pins if sticking. check that spring is not rusted or weak. Check that lanyard is not worn or frayed. Check that the tow hook is not bent or cracked.

(8) Hour Meter: Be sure hour meters are operational.

(9) Fuel tank: Check level in fuel tank with dipstick.

(10) Horn: Press the large button keep your finger on the button and the horn should continue to sound.

(11) Lines Check lines for frayed spots and breaks.

NOTE
The during operations check will be done after the boat is started and has been operated for at least 10 minutes after the boat is warmed up.

**** NOTE ****
THE BEB SHOULD NOT BE OPERATED OUT OF THE WATER FOR MORE TAN 20 MINUTES, OR OPERATED IN THE WATER FOR MORE THAN 20 MINUTES IN NEUTRAL

i. Maneuvering:

(a) General: Basically the BEB is a small scale tug boat equipped with two 363 cu inch diesel engines which power two individual hydro jets. The Hydro jets provide thrust to move and steer the BEB. Water is drawn through the grilles in the underside of the boat and expelled through nozzles mounted in the back of the boat. The force with which the water is expelled depends on the speed of the engine. The transmission will be in either the idle or forward positions when maneuvering and is only placed in reverse to clear debris out of the scoops.

(b) When the transmission is in forward and the scoop control levers are forward the jets direct water straight behind the boat causing the boat to move forward. When the scoop control levers are pulled all the way back the jets direct water under the boat in the direction of the bow causing the boat to move backward. When the scoop control levers are in the middle the jets direct the water straight down causing the boat to hold its position.

j. Shutting down the BEB:

(1) Allow the engine to idle for at least one minute.

(2) Pull out the stop engine controls.

(3) Turn off the engine circuit switch.

(4) Turn off the battery master switch by turning it counterclockwise until it stops.

(5) conduct after operations check

k. Emergency Procedures:

(1) Man Overboard:

(a) Sound off "MAN OVERBOARD" until the operator acknowledges you.

(b) Immediately stop the boat and kill the engines to listen. All Marines onboard will turn their attention to locating the lost Marine.

(c) Pick up lost Marine. If lost Marine can not be immediately found the boat operator and assistant boat operator will identify a reference point (this can be a tree, buoy or a chem light anchored to act as an expedient buoy) and an 8 digit grid coordinate

(d) Radio for help or fire signaling devices

(e) Move and Listen Move the BEB downstream periodically killing the engines and conducting listening searches. This will be done for approximately one mile.

(2) Fire: The BEB has two automatic fire extinguishers in the engine compartment and since most fires will be located in the engine compartment the extinguishers will take care of the problem. in the event that there is a fire and the automatic extinguishers fail to handle it the boat operator will be responsible for determining whether to fight the fires with portable extinguishers or evacuate the boat.

(3) Capsizing:

(a) The boat operator will get a head count.

(b) Give distress signal (with signaling devices or hand and arm signals).

(c) Keep Marines calm and close to the BEB until help arrives.

(4) Raft Commander Responsibilities:

(a) Maneuvering the raft safely.

(b) Making sure the bays are connected properly.

(c) Making sure the boat operator understands all signals that you might be given from time to time.

(d) When bringing the raft to the near shore back the raft in so you can have the vehicle drive on the ramp and off load easier on the far shore.

2. **MK48/18 Ribbon Bridge/Container Hauler**: The MK48/18 LVS is designed to self load, transport, and self unload standardized containers or ribbon bridge systems. Additionally, the MK48/18 can be utilized to self load/unload a bridge erection boat and cradle assembly, it's also used for high-bank launch operations of ribbon bridges.

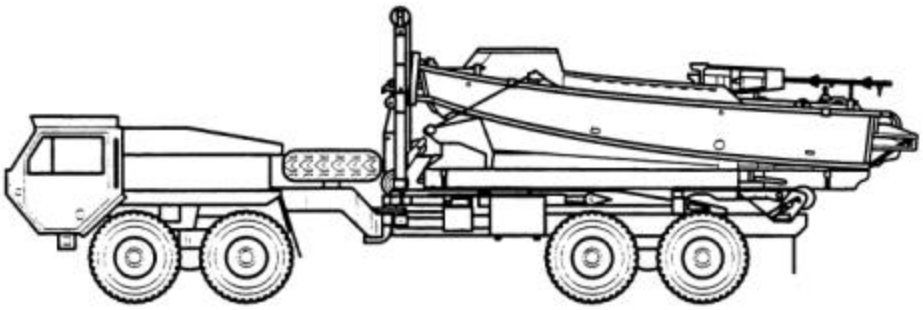

3. **Configuring**: Configuring consists of installing the appropriate SL-3 equipment in the proper positions to receive the boats or bays onto the MK48/18.

a. There are 41 steps to Configuring the MK48/18 for bridge erection boats the configuration is outlined in TM 2320-10/11 SUPPLEMENT-1. Always use the TM to configure the MK48/18 or **DAMAGE TO EQUIPMENT OR PERSONNEL WILL RESULT.**

b. Launching the BEB:

(1) Remove all the tie downs before the MK 18 is backed into the water.

(2) Make sure to double check that the bilge plug is in place.

(3) If launching in current remove downstream aft stanchion.

**** NOTE ****
BEB CAN BE STARTED AT THIS TIME, BUT SHOULD ONLY BE OPERATED OUT OF THE WATER FOR NO LONGER THAN 20 MINUTES.

(4) When cradle is lowered and boat stern is floating the operator will put the transmission in forward.

(5) Idle forward until retaining cables slacken, under some conditions turning the wheel to one side or the other will provide additional slack.

**** NOTE ****
BE CAREFUL NOT TO REMOVE SADDLE, THE CABLES WILL NOT SLACKEN AND DAMAGE TO BOAT AND CRADLE WILL RESULT.

(6) At this point the crew will unhook the cable hooks from the lifting point shackles and place hooks in the forward stanchion eyes.

**** NOTE ****

MAKE SURE CABLES ARE ON INSIDE OF REAR STANCHION TO PREVENT DAMAGE TO FORWARD STANCHIONS AS CRADLE IS RETRIEVED.

(7) The boat operator will then put scoops in reverse (make sure wheel is on 0) and back out of cradle.

(8) The crew can raise the mast to its upright position now.

REFERENCE(S):

1. FM 5-34\MCRP 3-17A Engineer Field Data

2. FMFM 7-26 River Crossing Operations

3. TM 5-1940-277-10 Operators Manuel, Bridge Erection Boat

4. TM 2320-10/11 Supp 1 Operators Manuel for trailer 4x4, MK-18

UNITED STATES MARINE CORPS
COMBAT ENGINEER INSTRUCTION COMPANY
MARINE CORPS ENGINEER SCHOOL
PSC BOX 20069
CAMP LEJEUNE, NORTH CAROLINA 28542-0069

C-23E08
5 June 00
(95 POI)

STUDENT HANDOUT

RIBBON BRIDGE

PURPOSE: The purpose of this period of instruction is to provide you with the knowledge and skills to employ the ribbon bridge and bridge erection boat in their various configurations and to identify the different anchorage systems.

TERMINAL LEARNING OBJECTIVE (S):

1. Given a mission specifying a military load classification requirement, a wet gap crossing site, bridge erection boats, ribbon bridge assets, and references, determine raft size required for wet gap crossing per the references. (1371.2.8)

2. Provided a mission, a wet gap crossing site, tools, bridge erection boats, ribbon bridge components, and references, while observing safety precautions, direct assembly of ribbon bridge raft per the references (1371.2.6)

3. Provided a mission, a wet gap crossing site, bridge erection boats, tools, fuel, bridge personnel, and references, utilizing correct hand signals, safely maneuver a standard military raft per the references. (1371.2.4)

4. Provided a mission, specifications, a bridge construction site, bridge erection equipment, tools, fuel, personnel, and references, direct installation of Ribbon Bridge to meet the design specifications per the references. (1371.2.5)

ENABLING LEARNING OBJECTIVE (S):

1. With the aid of references, identify the characteristics of the Ribbon raft per the references. (1371.2.8a)

2. Given a wet gap crossing, with the aid of references, determine the current velocity of the wet gap crossing per the references. (1371.2.8b)

3. Given a Military Load Classification requirement, a wet gap crossing water velocity, with references determine the rafting configuration per the references. (1371.2.8c)

4. With the aid of references, identify Ribbon raft components per the references. (1371.2.6a)

5. Given a wet gap crossing site, trucks, Ribbon Raft components, Bridge Erection Boats, and references, launch ribbon raft components per the references. (1371.2.6b)

6. Given a wet gap crossing site, Ribbon raft specifications, Ribbon Raft components, Bridge Erection Boats, personnel, tools and references, assemble ribbon raft per the references. (1371.2.6c)

7. Given a wet gap crossing site, a Ribbon Raft, Bridge erection boats, a vehicle, personnel, with references load a vehicle on the Ribbon Raft per the references. (1371.2.4a)

8. Given a Ribbon Raft loaded with a vehicle, Bridge Erection Boats, personnel, and references, demonstrate basic rafting hand signals per the references. (1371.2.4b)

9. Given the distance of a wet gap-crossing site, with references, brief the time required to cross the wet gap per the references. (1371.2.4c)

10. Given a Ribbon bridge, the current velocity of a wet gap crossing site, and a vehicle to cross the bridge, with references, brief the type of crossing to be utilized per the references. (1371.2.5a)

11. Given the current velocity of a wet gap-crossing site, a Ribbon Bridge, Bridge Erection Boats, and references, select an anchorage system for the bridge per the references. (1371.2.5b)

OUTLINE

1. **RIBBON BRIDGE**:

a. General: The ribbon bridge is a floating, modular bridge with integral superstructure and floating supports. A complete ribbon bridge consists of a ramp bay at each bank and the required number of interior bays to complete the bridge between the ramp bays. The bridge has a roadway width of 13 ft 5 in (408.9 cm). In addition, there are two 4-foot (121.9 cm) wide walkways on the bow pontoons. The normal crossing capability is a class 70 load in currents up to 8 feet per second. this bridge can cross 200 vehicles per hour, with a 100 foot space between vehicles traveling at 10 miles per hour. Individual bays may be joined to form a raft for ferrying operations. Each bay is transported in a folded condition on a ribbon bridge transporter known as MK48/18 LVS.

2. **INTERIOR BAY**:

a. Each bridge interior bay is a 4 pontoon folding module consisting of two roadway pontoon, and two bow pontoon. The two interior roadway pontoon are joined to each other and to the adjacent bow pontoon by hinges and pins along adjacent edges. The pontoon are secured in either the open or folded positions by latches.

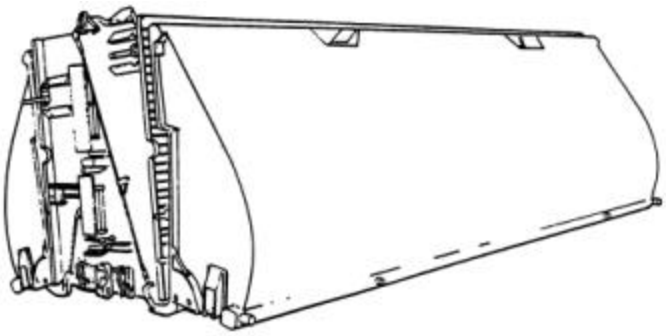

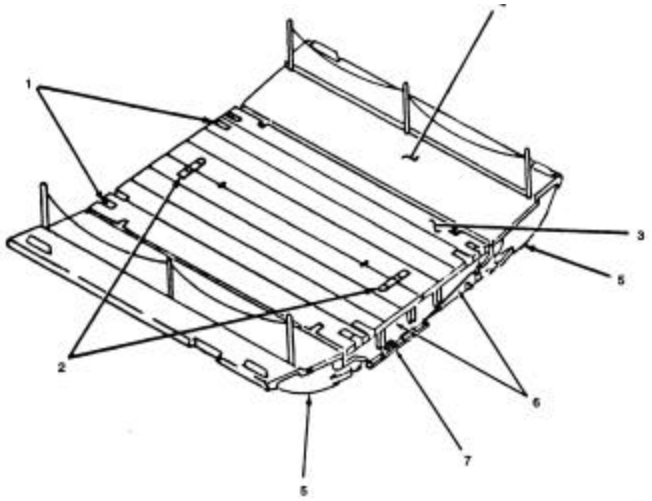

b. Interior Bay Dimensions

Length	22 ft 8.5 in (692 cm)
Width (folded)	10 ft 6.6 in (322 cm)
Width (unfolded)	22 ft 8.5 in (692 cm)
Height (folded)	7 ft 7 in (231 cm)
Height (unfolded)	3 ft 8 in (112 cm)
Weight	12,000 lbs (5443 kg)
Cube	1817 cu ft (51.5 cm)
Center of Gravity	136.25 in (346 cm) inboard of connecting lock pin

c. The welded roadway pontoon are the main load carrying structure of the bridges. Each pontoon is divided into two watertight compartments. When a bridge bay is mated to an adjacent bay, a lock pin joins male and female connectors. A plate is welded to the end of the deck extrusion; and, together they form the compression chord of the bridge structure.

d. Upper pontoon connectors are dog-bone shaped castings fitted into cast inserts welded into the deck.

e. The interior bay bow pontoon is hinged to the roadway pontoon, which provide additional flotation and a personnel walkway. Two lifting and anchor

pin eyes are welded outboard. A roadway-to-bow pontoon latch keeps the bow pontoon deployed as vehicles cross the bridge.

f. Control on Interior Bay. The functional description of the various controls on the interior bay used in launching, emplacing, retrieving, and transporting the bay.

(1) Bay Lower Lock Drive: Two lower lock drives at diagonally opposite ends of the interior bay, serve to engage the bay lower lock connecting pin with the bay lower-lock yoke and the eye of the mating bay, when connecting bays together during bridge assembly and operation.

(2) Bridge Bay/Bridge Bay Upper Connector: Two spring-loaded "dog bone" shaped bridge bay/bridge bay upper connectors are located on each end of the interior bays. These "dog bones" connectors are attached to connector blocks. When not engaged, the "dog bones" are stowed in the connector blocks. When engaged, they mate with two connector receptacles located opposite to the blocks on the adjacent bay and prevent separation of the bays during operation. Two connector receptacles are also located on each end of the interior bays.

(3) Roadway Pontoon Upper Connector: There is one roadway pontoon upper connector mounted on the inner edge of each interior roadway pontoon which engages in a connector receptacle provided on the opposite roadway pontoon. These connectors are identical to the bridge bay/bridge bay upper connectors. They serve to prevent separation of the roadways when operating under load.

(4) Handrail: Three handrail posts are mounted in structural supports located on the waterside of each bow pontoon walkway. The handrail posts are secured to the supports by the support pin, two washers, and two cotter pins. Safety ropes run between the handrail posts. The handrails are folded flat to the walkway when not in use.

(5) Road-to-Bow Pontoon Bridge Latch: A roadway-to-bow pontoon bridge latch is mounted at each end of the roadway pontoon. After the bay is launched, this latch is manually engaged with a latch receptacle mounted on the lower end of each bow pontoon securing the bow pontoon to the roadway pontoon.

(6) Roadway/Roadway Pontoon Travel Latch: A manually released roadway/pontoon travel latch is mounted on one end of each roadway pontoon. The travel latch engages with a travel latch receptacle mounted on the adjacent roadway pontoon. The travel latch, when in operating position, automatically engages the adjacent pontoon receptacle to hold the roadway pontoon together during the final folding operations. The travel latch also prevents unfolding of the bay during retrieval and travel. The latch is spring loaded for retention in either the stowed or locking position.

(7) Roadway/Bow Pontoon Foldlock Latch: A manually released roadway/bow foldlock latch is mounted on each end of the roadway pontoon. The foldlock latch when in the locking position, automatically engages the bow facing securing the bow pontoon to the roadway pontoon during folding operation. The foldlock latch also prevents accidental unfolding of the bow pontoon during retrieval and transport. The latch is spring loaded for retention in either the stowed or locking position.

(8) Bridge Bay Unfolding Mechanism: A bridge bay unfolding mechanism is mounted to one end of the interior bay. The unfolding mechanism is comprised of two bow pontoon levers, a front lifting and hinge pin, three equalizer links connecting the hinge pin to the roadway pontoon, and two unfolding tension cables which extend from the bow pontoon levers to opposite supports on the front lifting and hinge pin. The purpose of the unfolding mechanism is to control the folding and unfolding of the bridge bay in the water.

(9) Lifting and Anchoring Pins: Two lifting and anchoring pins are installed in structural supports on each bow pontoon. The lifting and anchoring pins are used in conjunction with a lifting sling and the transporter winch for high-bank-launching of the bays, and for lifting folded bays. They are also used for securing anchor lines from bridge erection boats to the bridge bays during bridging operations.

(10) Helicopter Lift Pins: Two helicopter lift points, marked AIRLIFT HERE are provided on each bow pontoon. These are to be used with the shackles and airlift sling provided in the supplementary erection set.

(11) Roadway Pontoon Lift Points: Each roadway pontoon has two lift points to be used only when the pontoon is handled by itself.

(12) Bilge Ports: Six bilge ports, three each at diagonally opposite lends of the interior bay, provide accesses to the interiors of the pontoon. Two ports are on each roadway pontoon and one port is on each bow pontoon. These ports are sealed by adjustable bilge plugs; which, when removed, allow inspection of the pontoon when the bay is retrieved and loaded on the transporter. Water pumps and hoses may be used to remove water from pontoon through the bilge ports when the bay is unfolded in the water.

(13) Cable Guides: A cable guide is located on each end of the interior roadway pontoon. The guide provides a means of revving the winch cable during loading and unloading operations. A hole is provided in each guide for the seating of the hydraulic lock pin.

3. **RAMP BAY**:

a. The construction of the ramp bay is similar to that of the interior bay except that the shore end is tapered. A 7-foot long approach ramp is hinged to each roadway pontoon. The bridge hydraulic system permits ramp adjustments from 0 to 20 degrees, providing access to various bank slopes.

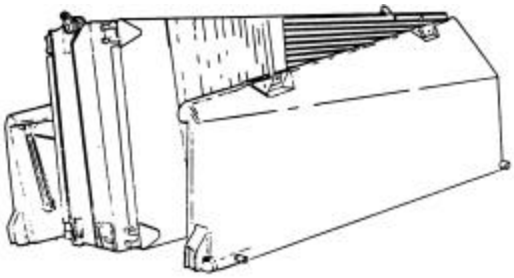

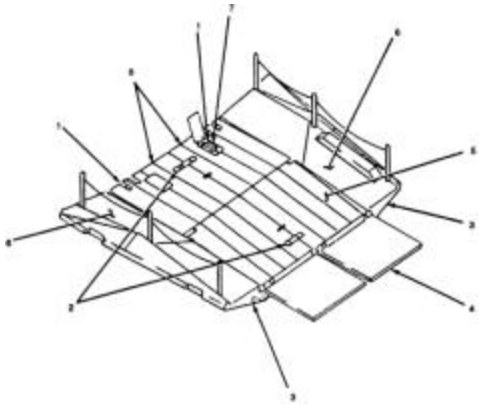

b. Ramp Bay Dimensions:

Length	19 ft 0.7 in (581 cm)
Length (with approach ramp extended)	25 ft 4 in (772 cm)
Width (folded)	10 ft 6 in (320 cm)
Width (unfolded)	26 ft 8 in (815 cm)
Height (folded)	7 ft 10.1 in (238 cm)
Height (unfolded)	3 ft 7 in (109 cm)
Weight	11,700 lbs (5579 kg)
Cube	1566 cu ft (44.35 cm)
Center of gravity	96 in (243.8 cm) inboard of connecting pin

c. Control on Ramp Bay. Control on the ramp bay is used in launching, emplacing, retrieving, and transporting the bay. All of the controls on the interior bay are common with the ramp bay except quantities may differ.

(1) Hydraulic Pump: Each ramp is equipped with two hand-operated pumps which actuate two hydraulic cylinders. The pumps are mounted on brackets directly below the deck of the roadway pontoon. Hinged covers are provided to gain access to the pumps. A control lever, built into the pump has three positions, when in the pump position it allows the operator to raise or lower the ramp bay to adjust to the slope of the bank. The traffic position will enable a bridge or raft to safely load vehicular traffic across the ramp bay. The transport position is used when recovering the ramp bays after the ramp bay has been disconnected from the bridge or raft, putting the control lever in the transport position relieves all the pressure from the hydraulic system, for storage.

(2) Roadway/Pontoon Travel Latch: A roadway/roadway pontoon travel latch identical to that on the interior bay is mounted on the front end of the ramp roadway pontoon.

(3) Ramp Bay Lower Lock Drive: The ramp bay has only one lower lock drive, located on the front of the ramp bay. The lower lock drive is similar to that on the interior bay and serves the same purpose. The lower lock drive is mounted on an adjustable yoke.

(4) Roadway/Bow pontoon Foldlock Latch: Two roadway/bow pontoon foldlock latches are mounted on the waterside of the ramp bay pontoon. The construction is similar to those on the interior bay and they serve the same function.

(5) Bilge Plugs: There are four bilge ports located near the front end of the ramp bay. One bilge port is mounted on each roadway pontoon and on each bow pontoon opposite the roadway pontoon plugs. They serve the same purpose and are identical to those on the interior bay.

(6) Cable Guide: A cable guide is mounted only on the front end of the ramp bay roadway pontoon. It serves the same purpose as those on the interior bay.

4. **TOOLS**: The following tools are used with interior and ramp bays of the ribbon bridge or raft.

a. Bay Drive PinWrench: The wrench is used to engage and disengage the lower lock drive pin.

b. Rafting Bracket: The rafting brackets are used as fenders during longitudinal rafting operations. They are made of aluminum and fit in the bow lifting and anchor pinholes.

c. Ramp Bay Connecting Tool: The ramp bay-connecting tool is used to pull the ramp bay to the interior bay when making a connection. The hooks are placed over the roadway-to-roadway upper connectors of the two bays. This device consists of a ratchet type chain hoist and two hooks. It is issued and stored in the ramp toolbox.

d. Wrecking Bar; The wrecking bar is used to apply force to align the bays when locking the bays together with the lower lock drive pin. The bar is also used to position the front and rear tiedown hook assemblies when launching or retrieving bays.

e. Ramp Upper Control Tool: The ramp roadway/roadway upper connector tool is used to level the roadway pontoon so that the upper (dogbone) connectors can be latched in place. It is issued and stored in the ramp toolbox.

f. Bay Latch Pin Assembly: The bay latch pin assembly is used to release the roadway travel latch after, a bay has been high bank or control launched. It is issued and stored in the ramp toolbox.

5. **RIBBON BRIDGE SITE RECONNAISSANCE AND REQUIREMENTS**:

a. Prior to calculating bridge requirements, the following information must be extracted from reconnaissance reports, operation orders, etc.:

(1) Wet gap width: The width must be known to determine the assets that will be required to span the gap.

(2) Current velocity: This must be known to determine if a ribbon bridge can be used or if a raft is required. If a ribbon bridge can be used

use the current velocity to determine the anchorage method i.e.; Bridge boats, Shore guys, Kedge anchors or an overhead cable system.

(a) Current velocity must be taken in the loading, unloading and midstream areas.

(3) Proposed bridge site conditions such as:

(a) Bridge approaches, must be less than a 7% slope. (7" drop over a 12'6" distance)

(b) Size and location of possible assembly sites: The assembly site must have, a water depth of at least 40 inches in the main body for operation of the bridge erection boats. A bank height of less than 48 inches to accommodate ramp bay approach ramps. There must be a launch site down stream of the assembly site with a bank height of less than 60 inches with a water depth of 72 inches for free launching bays or a bank height of less than 28 feet for high bank launching. The bank width must be 50 feet wide for maneuvering the MK48/18 transporter. There must be a good access road from the bridge bay launch site to the staging area. A minimum downstream floating area of 100 feet is required in areas where water is flowing more than 1 ft./sec.

(c) Soil conditions at site: A hasty soil analysis must be done on site to design the anchorage system to be used.

(d) Wet gap bottom composition: Must be known for use of kedge anchors and any obstructions below the planned bridge site.

(4) Desired MLC (Military Load Classification): It must be known from the operations order what MLC is to be crossing the bridge. The Ribbon Bridge is designed to hold a MLC of 70 in streams up to 8 ft./sec.

6. **RIBBON BRIDGE DESIGN**: As in all bridges to determine the amount of assets required to build the bridge first it must be designed. The bridge design formula is in annex B of FMFM 7-26 page B-7. Here it shows the two ways to calculate the number of bays required to reach from shore to shore, in both metric and standard measurement.

a. First determine the gap width, then subtract the length of both ramp bays, then divide that answer by the length of one interior bay. The answer from that equals the number of interior bays required to span the gap.

$$\frac{\text{gap (meters)} - 14}{6.7} \quad \text{or} \quad \frac{\text{gap (feet)} - 45}{22}$$

b. Construction time; During daylight hours a ribbon bridge can be constructed at a rate of 200 meters, 600 feet per hour. reduce by 50 percent at night or 100 meters 300 feet.

c. Crossing capabilities; The ribbon bridge is capable of crossing 200 vehicles per hour with 30 meters, 100 feet spacing at 16 kilometers, 10 miles per hour.

d. Bridge classification; The bridge classification is taken from the table in annex B of FMFM 7-26 page B-7. Read the top row current velocity (mps/fps) find the current velocity read down that column to identify the military load class for a normal, caution and risk crossings, the top number is for wheeled vehicles the bottom number is for tracked vehicles.

Table C-10. Determination of bridge classification

Crossing Types	Current Velocity in MPS (fps) and MLC							
	0-0.9 (0-3)	1.2 (4)	1.5 (5)	1.75 (6)	2 (7)	2.5 (8)	2.7 (9)	3 (10)
Normal:								
wheeled	96	96	96	96	82	65	45	30
tracked	75	75	70	70	80	60	45	30
Caution:								
wheeled	105	105	100	100	96	75	50	35
tracked	85	85	80	80	80	65	50	35
Risk:								
wheeled	110	110	105	105	100	82	65	40
tracked	100	195	90	90	90	75	65	40

e. Type of crossing.

(a) Normal - Vehicles may travel anywhere on the bridge deck at speeds up to 25 mph

(b) Caution - Vehicles restricted to within 12 inches of the bridge centerline at 8 mph with 150-foot interval between vehicles. Stopping, accelerating, or shifting gears is not permitted on the bridge.

(c) Risk - Vehicles restricted to within 9 inches of the bridge centerline and a guide is required to direct the vehicle. Maximum speed is 3 mph, and only one vehicle is allowed on the bridge at a time. Stopping, accelerating, or shifting gears is not permitted on the bridge.

7. **ANCHORAGE SYSTEMS**: The Ribbon Bridge is only as good as the anchorage used to secure it. The ribbon bridge must be anchored between abutments to assure continuous alignment. There are five basic anchorage systems used to secure the ribbon bridge. The best overall anchorage system is the overhead cable system.

a. Factors involved in the selection of an Anchorage System.

(1) Stream Velocity - Each system is only good in currents up to a given stream velocity. The kedge anchor system is good in currents with a velocity of up to 3 fps, the shore guy line system is good in currents with a velocity of up to 3 fps, and both of these systems together are good in currents with a velocity of up to 5 fps. The overhead cable system is good in currents with a velocity of up to 11 fps.

(2) Type of soil - some soils are not suitable for the use of deadmen as a holdfast, as some soils like fine grained soils with a high moisture content does not have a holding power for deadmen like hardpan or rock would.

(3) Height and slope of the bank - When the bank is very high the overhead system should be used since the high banks eliminate the need for constructing a cable tower.

(4) Width of the gap - Some anchorage systems cannot be used for extremely wide gaps. For example, the shore guy line system.

(5) Stream bed - If the streambed is not satisfactory for use of the kedge anchor system, you can not use this system. The streambed must be such that the fluke of the anchor can dig in and hold the float in place.

b. Shore Guys; Description - Shore guys from the bridge to deadmen or natural holdfasts are used primarily to hold the bridge assembly, but can be incorporated into the final anchorage system of the bridge. They are constructed of 1/2-inch wire rope, which is run at an angle of 45 degrees from the bridge to the shore. Shore guys should not be used at distances greater than 300 feet from either shore along the centerline of the bridge. When installed on the upstream side as a supplementary anchorage system, they must be slacked off after installation. For spans under 600 feet, shore guys can be used as the downstream anchorage unless severe eddies or tidal conditions cause current reversals. To prevent accumulation of debris, the guys should be raised clear of the water with an "A" frame or other support. Deadman or natural holdfasts must be located above the anticipated high water level to prevent washout. This system is good in stream velocities of up to 3 feet per second (fps).

(1) Installation

(a) Upstream Shore Guys - The upstream shore guys are unreeled from shore and passed out along the bridge. One man is stationed at every other float to hold the cable out of the water as it is passed to shore. The guy line is passed under each bridle line except the two shoreward of the point where the guy is attached to the bridge. One line is attached every sixth bay or float.

(b) Downstream Shore Guys - Downstream shore guys are best installed after the bridge is completed to avoid interference with powerboat operation. They are installed in the same manner as the upstream shore guys. One line is attached to every tenth bay.

(c) Approach Guys - Approach guys are attached upstream and downstream on the first bay on both near and far shores. The purpose of the approach guy is to keep the bridge from creeping due to vehicle impact.

c. Kedge Anchor: Kedge anchors lay on the stream bed with the stock lying flat and the fluke positioned to dig into the bottom. They are secured by cables to the bays or rafts. Kedge anchors depend on the streambed for holding power, and are useful only when the bed is composed of sand, silt, loose rock or other material into which the fluke can take hold of. On hard bottoms, the kedge anchor is useless. Where the streambed is suitable, kedge type anchors can be used as a primary anchorage system in low velocity currents or up to 3 fps.

d. Combination of Anchors and Guys; Combination of kedge anchors and shore guys may be used in currents with a stream velocity of up to 5 fps.

e. Overhead Cable System; Overhead cable systems consists of one or more tower supported cables spanning the river parallel to the bridge on the up stream side. They are also used downstream of the bridge on tidal streams as a supplementary anchorage system under severe current conditions, providing sufficient materials and equipment are available. The system may be attached to trees or other natural holdfast as an expedient; however, the anchor tower must be erected just as soon as the time and materials are available. Bridle lines are used to make the bridge secure to the cable. The overhead cable acts in a manner similar to the cable of a suspension bridge. This system is good in currents with a stream velocity of up to 11 fps.

(1) Single Cable Anchorage - This is a tower-supported cable, which spans the river on the upstream side of the bridge. Single cable systems can be built for bridges as long as 1,200 feet in low velocity streams. Installation of cable spans up to 1,500 feet are possible, but are difficult because of the practical limitations of erection equipment and cable size and weight. In rivers having reversals of currents or strong winds from downstream an additional single cable system may be used as a downstream anchorage. In reinforcing an existing bridge, it will usually be necessary to strengthen the anchorage system by increasing the holding power of the existing deadmen, or by constructing a multiple cable system.

(2) Float Supported Cable - This anchorage system is used when an overhead cable system would be overstressed. One or more cables are supported by towers on each shore span of the river and are anchored in the same manner as overhead cables. The cables are supported by rafts or floats, which are spaced at an interval, required to keep the cable above water. The rafts or floats are anchored in place with crib or heavy bed anchors. The length of the anchor line from the raft to the bed anchor should be at least 10, and preferably 20, times the depth of the water. Bridle lines connect the bridge to the cable in the same manner as with the overhead cable system. The rafts must have sufficient buoyancy to withstand the downward pull of the bed anchor lines, the weight of the cable and the drag of the bridle lines. Sufficient free-board must be maintained to clear the bow wave created by the current. This anchorage system obstructs the passage of debris and ice and requires additional maintenance personnel to keep the cables and lines free.

(3) Multiple Cable Anchorage - If the cable size required for a single cable system cannot be obtained or if the cable required is too large for the bridle lines, two or more smaller cables may have to be installed.

f. Bridge Erection Boats - May be used to anchor any length ribbon bridge. The number of boats required and their spacing will be determined by the current velocity. See table C-11 of FM 90-13/MCWP 3-17.1 pg C-14 also in handout the handout given to you by the instructor.

6. **RIBBON RAFT DESIGN**: To design a ribbon raft we must know the current velocity and maximum Military Load Class to be rafted, and what method of rafting will be used longitudinal or conventional.

a. Methods of rafting:

(1) They are two ways to attach the Bridge Erection Boats to the Ribbon Raft and maneuver it.

(a) Conventional rafting: the bridge erection boats are tied perpendicular to the raft, and is used when the current velocity in the loading and unloading areas is greater than 5 fps.

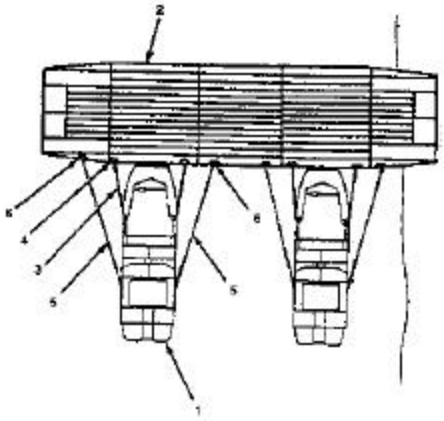

(b) Longitudinal rafting: the bridge erection boats are tied parallel to the raft using rafting brackets to attach the boat to the raft. This method of rafting is used when the current velocity in the loading and unloading areas is 5 fps or less.

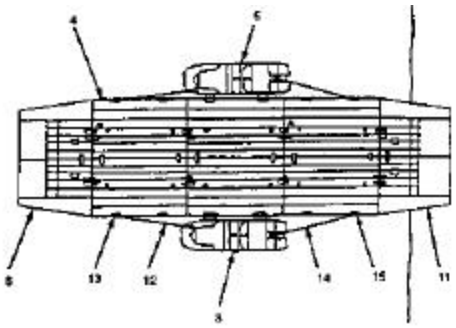

b. Designing a ribbon raft: Annex B of FMFM 7-26 page B-6 contains the table for Ribbon Raft Design. To read this table start at the top right and find the appropriate current velocity, read down that column to find the military load class required, now read to the capabilities/raft column on the far left, and it will tell you the number of interior and ramp bays required in the raft. The second column from the left is the assembly time for the raft in minutes, increase this time by 50 percent at night.

Raft Types	Assembly Time in Minutes	Load Space in Meters (feet)	Classification	Current Velocity in MPS (fps) and MLC							
				0-0.9 (0-3)	1.2 (4)	1.5 (5)	1.75 (6)	2 (7)	2.5 (8)	2.7 (9)	3 (10)
3 bays (2 ramps/ 1 interior)	8	6.7 (22)	L C	45 45	45 45	45 35	40 25	40 15	35 10	30 0	25 0
4 bays (2 ramps/ 2 interiors)	12	13 (44)	L C	70 60	70 60	70 60	60 55*	60 40*	60 30*	55 15*	45 0
5 bays (2 ramps/ 3 interiors)	15	20.1 (66)	L C	75 75	73 70	75 70	70 70*	70 60*	70 50*	60 25*	60 0
6 bays (2 ramps/ 4 interiors) wheeled/ tracked	20	26.8 (88)	L C	96 80 96 70	96 80 96 75	96 80 96 70	96 70 70 70	96 70 70 70	96 70 55 55	70 70 30 30	70 70 0

NOTES:
1. When determining raft classification, L refers to the longitudinal rafting and C refers to conventional rafting.
2. If the current's velocity in the loading/unloading area is greater than 1.5 MPS (5 fps), then conventional rafting must be used.
3. The roadway width of a ribbon raft is 4.1 meters (13 feet 5 inches).
4. The draft of a fully loaded ribbon raft is 61 centimeters (24 inches).
5. Vehicles should only be loaded on the interior bays.
6. Each raft requires a minimum of two BEBs for propulsion.
7. The assembly time for a raft increases by 50 percent at night.

*Three BEBs are required for conventional rafting of 4, 5, or 6 bay rafts in current velocities greater than 1.5 MPS (5 fps).

c. Crossing capabilities: Again Annex B of FMFM 7-26 page B-4 contains the table for Ribbon Raft crossing capabilities. To read this table the first two rows are the river width, read right to the appropriate width column then down. If the river width your working with falls between two of the given widths use the larger of the two for further information. The third row is the time in minutes required to make one round trip per raft, this includes the time required to load and unload the raft. Crossing times will take 50 percent longer at night. The fourth row is the number of round trips per hour each raft can make. The fifth row is the number of rafts that can safely operate on the same rafting centerline.

River Width		Minutes per Round Trip	Rounds Trips per Hour	Number of Rafts per Centerline
Feet	Meters			
246	75	7	8	1
328	100	8	7	1
410	125	9	6	1
492	150	10	6	2
610	186	11	5	2
738	225	12	5	2
861	263	14	4	3
984	300	16	3	3
1,148	350	18	3	4
1,312	400	20	3	5
1,476	450	22	2	5
1,640	500	24	2	5
1,968	600	26	2	6
2,296	700	29	2	6
2,624	800	32	1	6
2,952	900	35	1	6
3,280	1,000	38	1	6
3,608	1,100	41	1	6
3,936	1,200	45	1	6

NOTES:
1. This table is valid for ribbon and M4T6 rafts in current velocities up to and including 1.5 MPS (5 fps). This data is based on the use of crews under ideal conditions.
2. Round-trip times include the times required to load and unload the raft.
3. Crossing times will take 50 percent longer at night.
4. If the river width falls between 2 columns, use the value found in the next higher column.

7. **MK48/18 RIBBON BRIDGE/CONTAINER HAULER**: The MK48/18 LVS is designed to self-load, transport, and self unload standardized containers or ribbon bridge systems. Additionally, the MK48/18 can be utilized to self-load/unload a bridge erection boat and cradle assembly, it's also used for high-bank launch operations of ribbon bridges.

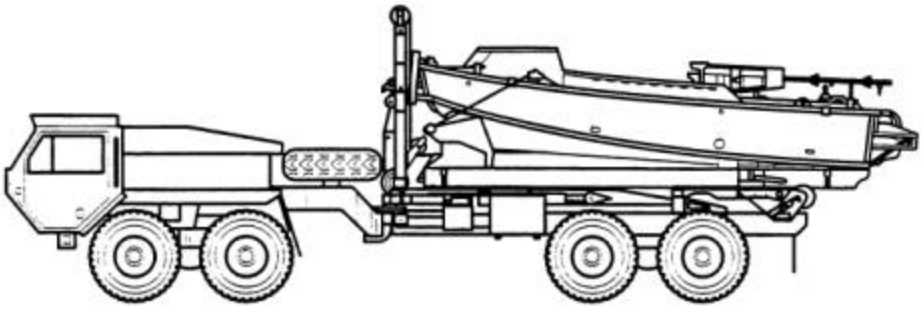

a. There are 48 steps to configuring the MK48/18 for ribbon bridge bays, the configuration is outlined in TM 2320-10/11 SUPPLEMENT-1. Always use the TM to configure the MK48/18 or **DAMAGE TO EQUIPMENT OR PERSONNEL WILL RESULT.**

8. **LAUNCHING AND RETRIEVING RIBBON BRIDGE BAYS**: There are three ways to launch the ribbon bridge, providing us with the ability to access a variety of streams with variable bank heights. They are; High Bank Launch, Control Launch, and Free Launch.

a. High bank launch method this method makes possible the launching of a bay from up to a 28-foot vertical bank. This method should be used if no other method of launching can be performed. Prior to launch a through inspection of the area should be made to ensure the bank will support the MK48/18 and bay to permit safe operation. A minimum of 17 inches of water is required for unfolding a bridge bay. Three Marines are required to launch a ribbon bridge bay using this method. An operator for the MK48/18, an assistant and a driver for the MK48 LVS.

(1) First take the bay off the truck and put it on the ground, place the bay parallel to the river.

(2) Connect winch hook to hook anchor on front locking assembly on the MK48/18 install a snatch block on the winch cable.

(3) Back up MK48/18 perpendicular to the shore side of the bay. Ensure that the rear of the MK48/18 is centered and within 20 inches of the bay.

(4) Tilt up and fully raise the mast assembly to approximately 107 degrees.

(5) Connect a four point lifting sling to the bay, and connect the snatch block to the sling.

(6) Lift the bay off the ground approximately 24 inches tilt the mast assembly down until the bay comes to rest against the platform ensure that all tiedown hook assemblies are open.

(7) Connect two lines one at each end of the bay for stability while moving the MK48/18, and receiving the bay with the bridge erection boats.

(8) Open up all foldlock latches and down stream end travel latch. Install latch pin (lanyard) in up stream travel latch.

(9) Back the MK48/18 to the edge of the bank and set the parking brake. Connect the up stream line to an anchor point or a bridge erection boat. Use the down stream line to steady the bay during launching.

(10) Lower bay into the water, move a bridge erection boat on the downstream side to hold the bay and remove the sling.

(11) Bring the up stream boat to the lanyard to release the roadway travel latch. Have bridge boats move clear of the unfolding area, then Pull the lanyard and the bay will unfold.

b. Control launch method: The control launch is done much in the same manner as unloading or loading on firm ground.

(1) Two Marines are required to control launch a ribbon bridge bay; an operator for the MK48/18, and a driver for the MK48 LVS.

(2) Launch site selection: Optimal is a site that has, no more than 5 degrees side slope, no more than fifteen degrees fore and aft slope. Water depth must be at least 30 inches, however bays can be launched and will unfold in 17 inches of water if great care is taken. 11 feet aft of the MK48/18 the stream velocity must not be more than 5 feet per second.

(a) Position MK48/18 near launch site rear toward water

(b) Ensure all bilge plugs are installed

(c) Unlatch (interior bay only) two rear roadway/bow foldlock latches

(d) Unlatch two front roadway/bow foldlock latches

(e) Lock front tiedown hook assembly into launch position on both sides

(f) Lock rear tiedown hook assembly into launch position on both sides

(g) Back MK48/18 into water to appropriate launch depth

(h) Raise mast assembly to 10 degrees (if necessary)

(i) Unlock the hydraulic locking pin

(k) Winch out until front pin is located between the front and rear tiedown hook assemblies

(l) Unlock rear tiedown hook assemblies into the vertical position

(m) Winch out until the front pins are seated in the rear roller tiedown hook assembly

(n) Remove cable from cable guide on bay

(o) Winch in and tilt bed up until the bed is approximately 90 degrees

(p) Winch in lifting the bay out of the rear tiedown hook assemblies then winch out until the bay floats free of the MK48/18

(q) hold until the bridge erection boat can unhook winch cable and take control of the bay

c. Free launch method

(1) Two Marines are required to free launch a ribbon bridge bay; an operator for the MK48/18, and a driver for the MK48 LVS.

(2) Launch site selection: Optimal is a site that has, no more than 5 degrees side slope, no more than fifteen degrees fore and aft slope. Water depth must be at least 36 inches, for interior bays and 44 inches for ramp bays measured 11 feet aft of the MK48/18 the stream velocity must not be more than 5 feet per second.

(a) Position MK48/18 near launch site rear toward water

(b) Ensure all bilge plugs are installed

(c) Unlatch (interior bay only) rear travel latch and two rear roadway/bow foldlock latches

(d) Unlatch two front roadway/bow foldlock latches and front travel latch

(e) Winch out cable, and remove cable from cable guide and lifting eye. Connect winch hook to chain on sliding beam assembly.

(f) Lock front tiedown hook assembly into launch position on both sides

(g) Lock rear tiedown hook assembly into launch position on both sides

(h) Back MK48/18 into water to appropriate launch depth

(i) Raise mast assembly to 10 degrees (if necessary)

(j) Unlock the hydraulic locking pin

(k) Observe the bay slide free of the MK48/18 into the water.

(3) Retrieving ribbon bridge bays

(a) Position MK48/18 near launch site rear toward water

(b) Put rear tiedown hook assemblies in vertical locked position

(c) Back MK48/18 into water to appropriate depth

(d) Raise boom to its full height 107^0

(e) Ensure the roadway pontoon upper connectors are unlocked

(f) Ensure the roadway-to-bow pontoon bridge latch is unlocked

(g) Ensure the front and rear roadway/bow foldlock latches are in the locked position

(h) Ensure the front and rear travel latches are in the locked position

(i) Maneuver the bay center of the MK48/18 hook the cable into the lifting eye

(j) Disconnect the bay from the bridge erection boat and clear the crew from the bay

(k) Winch in cable at a steady rate until bay is completely folded and latched.

(l) Winch in cable lifting bay 1-2 feet above rear tiedown hooks aligning the cable guide in the centering plate.

(m) Winch out cable lower until left and right front lockpins are seated in rear roller and tiedown hook assembly.

(n) Tilt the mast down while winching cable out until approximately the same angle as the bay

(o) winch out until cable can be fed through cable guide on the bay, feed the cable through the cable guide.

(p) Winch in until the front of the bay is over the front roller.

(q) Tilt mast down winch bay completely in, insert hydraulic locking pin

(r) Ensure the left and right front tiedown hook assemblies engage rear bay lockpins.

REFERENCE(S):

1. FM 5-34
2. TM 5-210
3. TM 5-5420-209-12
4. TM 2320-10/11
5. TM 5-1940-277-10

UNITED STATES MARINE CORPS
COMBAT ENGINEER INSTRUCTION COMPANY
MARINE CORPS ENGINEER SCHOOL
PSC BOX 20069
CAMP LEJEUNE, NORTH CAROLINA 28542-0069

C-23F07
5 June 00
(95 POI)

STUDENT HANDOUT

DEMOLITION RECONNAISSANCE

1. PURPOSE: The purpose of this period of instruction is to provide you with the knowledge and skills necessary to perform a demolition reconnaissance.

2. INTRODUCE LEARNING OBJECTIVE (S):

a. TERMINAL LEARNING OBJECTIVE (S):

1. Provided a mission, a target, a map compass, and DA Form 2203-R, as a member of a team, conduct a demolition reconnaissance in accordance with FM 5-250. (1371.2.21)

3. **DEMOLITION PLANNING**:

a. Execution of a demolition project. The execution of a demolition project must be based upon careful planning and reconnaissance.

b. Selection of a demolition project.

(1) Mission of the command.

(2) Limitations and instructions of higher authority.

(3) Current tactical and strategic situations and future plans that indicate the length of time the enemy must be delayed, the time available for the demolition, and the extent of denial to be accomplished.

(4) Enemy's capabilities and limitations as well as the effect of denial upon them strategically and tactically.

(5) Likelihood that friendly forces may re-occupy the area and be required to neutralize the target.

(6) Results to be obtained by the expenditure of labor and materials compared to the results that may be obtained elsewhere with the same amount of effort.

(7) Time, material, labor, and equipment available.

(8) Effect on the local population.

(9) Target protection required.

4. **DEMOLITION RECONNAISSANCE REPORT**:

a. The demolition reconnaissance report provides information in all areas related to the target. Use DA Form 2203-R together with appropriate sketches to record and report the reconnaissance of demolition target. This report will be your primary source to prepare a target folder.

b. The demolition reconnaissance report should contain the following information:

(1) BLOCK 1. File Number. Given by higher headquarters or completed at higher headquarters when submitted.

(2) BLOCK 2. DML Reconnaissance Report Number. Same as item 1 or determined at company level IAW SOP.

(3) BLOCK 3. Date. The date the reconnaissnace was performed.

(4) BLOCK 4. Time. Time arrived at target site-local time.

(5) BLOCK 5. Reconnaissance Ordered By.

(6) BLOCK 6. Party Leader. NCOIC or OIC of reconnaissance party who was physically at the site when the reconnaissance was conducted.

(7) BLOCK 7. Map Name. Taken off map sheet (1:50,000). Scale sheet, and series number.

(8) BLOCK 8. Target and Location. Brief target description and distance and direction from an identifiable terrain feature (i.e. railroad bridge 2 miles east of Hanesville on RT 2).

(9) BLOCK 9. Time Observed. The time you last saw the target or departed the site.

(10) BLOCK 10. Coordinates. Complete 8 digit coordinates of the target.

(11) BLOCK 11. General Description. (attach sketches) When applicable include type of construction, width of roadway, number of lanes/tracks, type of pavement, number of spans, condition of spans/entire bridge, categorization and classification (i.e. Prestressed concrete T-beam bridge, 4 simple spans supported by 6 concrete columns, 2 lanes, total bridge length 140 feet long, 30 feet wide roadway, 36 feet overall width, 16 feet high, class 80, very good condition).

(12) BLOCK 12. Nature of Proposed Demolition. (attach sketches) State how much of the target will be destroyed, number and type of charges used (tamped or untamped), where charges are placed, type of firing system to be used. State charge placement priority if feasible. Sketch will contain critical dimensions.

(13) BLOCK 13. Unusual Features of Site. Include any special features of the target or site which might affect the method of demolitions (i.e. High tension lines, radar installation). Give details which may affect the security of the target and the demolition work party.

(14) BLOCK 14. Explosives Required. Blocks a - g are all self explanatory.

(15) BLOCK 15. Equipment and Transport Required. Determine availability of equipment and transportation by type. Specify the amount and type of transportation required, and the amount of items, supplies and/or equipment required to prepare the target for demolition (i.e.2-5 ton dumps, 1 ram set with 50 cartridges, 2 post hole diggers, 2 demolition sets, 10 lbs. 16d nails, 12-2"x4"x8" lumber). NOTE: Troops

(16) BLOCK 16. Personnel and Time Required for:

a. Preparing and Placing the Charges.

b. Arming and Firing the Demolition.

Determine whether a squad or platoon size element will be preparing and placing the charges. The distance between the firing points and firing systems will be a determining factor in how much time it will take to arm and fire the demolition.

(17) BLOCK 17. Time, Labor, and Equipment for Bypass. Specify location and method (You're estimate of the time, number of men, amount and type of equipment required to construct a bypass at or near the destroyed target).

(Specify distance and direction) or to replace the target (Whichever is easier). Also direction, distance and time required to drive around the obstacle.

REFERENCE(S):

FM 5-250

UNITED STATES MARINE CORPS
COMBAT ENGINEER INSTRUCTION COMPANY
MARINE CORPS ENGINEER SCHOOL
PSC BOX 20069
CAMP LEJEUNE, NORTH CAROLINA 28542-0069

C-23G01
5 June 00
(95 POI)

STUDENT HANDOUT

FIELD FORTIFICATION DESIGN

1. INTRODUCE LEARNING OBJECTIVES:

a. TERMINAL LEARNING OBJECTIVES:

(1) Provided a mission, an area map, reconnaissance reports, and references, design field fortifications/fighting positions to support the mission per the references. FM 5-20, FM 5-34/MCRP 3-17A, and FM 5-103 (1371.4.2)

(2) Provided a mission, an area map, reconnaissance reports, and references, design crew served weapons and vehicle fighting positions to support the mission per the references. FM 5-20, FM 5-34/MCRP 3-17A, and FM 5-103 (1371.4.3)

(3) Provided a mission, a defensive position, personnel, tools, equipment and references, direct the construction of field fortifications/fighting positions expeditiously and properly per the references.
FM 5-20, FM 5-34/MCRP 3-17A, and FM 5-103 (1371.4.4)

b. ENABLING LEARNING OBJECTIVES

(1) Provided a mission, an area map, reconnaissance reports, and a tactical situation requiring construction of a shelter/bunker, select the appropriate shelter/bunker design per the references. FM 5-20, FM 5-34/MCRP 3-17A, and FM 5-103 (1371.4.2a)

(2) Given a defensive position, equipment and personnel with the aid of references, determine the material required to construct a defensive position per the references. FM 5-20, FM 5-34/MCRP 3-17A, and FM 5-103 (1371.4.2b)

(3) Given a defensive position, equipment and personnel with the aid of references, construct a field fortification/fighting position per the references. FM 5-20, FM 5-34/MCRP 3-17A, and FM 5-103 (1371.4.4a)

2. BASIC REQUIREMENTS

a. Weapon Employment

(1) It is desirable for fighting positions to give maximum protection to personnel and equipment.

(2) In defensive combat operations, weapons are sighted wherever natural and existing positions are available.

b. Cover

(1) Cover is protection from enemy fire.

(a) The overall purpose of cover is to defeat any possible threat.

(b) Cover designed for one type of enemy fire is not necessarily effective against another.

1 Frontal: Cover provides protection from small caliber direct fire. Natural frontal protection such as large trees, rocks, logs and rubble is best because enemy detection of fighting positions becomes more difficult.

2 Overhead: Cover provides protection from indirect fire fragmentation. When possible, overhead cover is always constructed to enhance protection against air burst artillery shells.

3 Flank and Rear: Cover ensures complete protection for fighting positions. It protects personnel against the effects of indirect fire bursts to the flanks or rear of the position.

c. Camouflage

(1) Camouflage is to change or modify so far as to prevent recognition of the true identity or character of a position or person by blending in with the natural environment or terrain.

(a) Camouflage activities are continual during position siting and preparation.

(b) Offers friendly forces the advantage to fire just before being detected.

d. Concealment. Concealment is to provide protection from enemy observation.

e. Simplicity and Economy. The position is usually uncomplicated and strong, requires as little digging as possible, and is constructed from immediately available materials whenever possible.

f. Ingenuity. A high degree of imagination is essential to ensure the best use of available materials. Many different materials that exist on the battlefield, and prefabricated materials found in industrial and urban areas can be used for position construction.

g. Progressive Development

(1) Position should allow for progressive development to insure flexibility, security, and protection in depth. Development in progressive phases, with highest prioritized tasks accomplished first.

(2) Hasty positions are continuously improved into deliberate positions to provide maximum protection from enemy fire.

3. TYPES OF POSITIONS

a. Dragon Position

(1) The operator must consider the dragon's extensive back and muzzle blast, as well as a clear field of fire.

(2) When the dragon is fired, the muzzle extends 6 inches beyond the end of the position, and the rear of the launcher extends out over the rear of the position.

(3) The weapon should be at least six inches above the ground when fired to leave room for the fins to extend out.

(a) A waist deep position will allow the gunner to move while tracking a target.

(b) The frontal cover should be high enough to conceal the Marine's head and, if possible the dragon's back blast.

(c) A hole must be dug in front of the position for the bipod legs.

(d) If cover is built on the flanks of a dragon position, it must extend above the tracker, missiles and the gunner.

(e) Overhead cover for dragon position requires the back blast area be cleared.

(f) The backblast area extends 50 meters to the rear of the launcher forming a 90 degree angle danger zone and two 45 degree angle caution zones that extend out to 30 meters on either side of the danger zone. The danger zone extends 30 meters behind the launcher at about a 60 degree arc.

(g) The estimated construction time for the dragon position is 4.0 man hours with the use of hand tools and 0.5 man hours with the use of a SEE Tractor.

b. Machine Gun Position

(1) The hole is shaped so both the gunner and assistant gunner can get to the gun and fire it to either side of the frontal protection.

(2) The position is dug chest high in the center to serve as the gun platform, and 2 feet wide along the rear and side of the platform.

(3) The gun's height is reduced by digging the tripod platform down as much as possible.

(4) The platform is dug in a manner which allows the gun transverse across the entire sector of fire.

(5) The tripod is used on the primary sector of fire, and the bipod legs are used on the secondary sector.

(6) The ammunition bearer digs a one man fighting position to the flank.

(7) The ammunition bearer's position is connected to the gun position by a crawl trench so the bearer can transport ammunition or replace one of the gunners.

(8) The position also includes a grenade sump which is dug at the bottom of the front wall 3 feet long and 6 inches wide at a 30 degree angle.

c. Machine Gun Position/Overhead Cover

(1) Overhead cover for a machine gun position is built over the middle of the position.

(2) Cover is constructed as described for the one man fighting position with overhead cover.

(3) To construct this position with the use of hand tools the estimated time is 7.0 hours for the three man gun crew.

(4) The equipment used, other than hand tools is a SEE Tractor, and the estimated time to construct the position with this is 0.5 hours.

(5) See Table 1 for characteristics of crew-served weapons fighting positions.

d. Mortar Position

(1) A fighting position for a mortar is a circular shaped hole.

(2) The position is dug to a depth sufficient to shield the weapon and crew but does not restrict the weapon's operation.

(3) The mortar pit should be about 2 to 3 feet deep and 8 feet in diameter, and its bottom should be flat to enable the mortar crew to fire in any direction, but with a 1 to 4 inch slope towards a drainage sump. The drainage sump minimum depth is 20 inches, but it can be deeper depending on the weather. On frozen, hard or rocky surfaces the mortar crew places sandbags in the center of the gun pit to seat the base plate. In soft soil, mud, sand, or snow, the ground under the base plate will require preparation to keep the base plate from sinking into the ground. The base plate should be placed over a 12-inch cushion of sandbags, earth and small stones and a backstop (log, tree trunk or ammo canister filled with sand) place behind it to keep the base plate from sliding back or sinking too deep into the ground.

(4) The pit must not be dug any deeper into the ground than the sight unit. The sight unit has to be above ground level in order to enable the gunner to see the aiming posts. Grenade sumps should have an opening wide enough to allow a man on the opposite side of the gun to pitch a grenade in with ease.

(5) The ready ammunition niche is used for final protective fire ammunition or other preset ammunition and should be wide enough to provide protection from direct sunlight and wet weather. The connecting trench is turned approximately 45 to 90 degrees just prior to the squad ammunition pit to prevent an explosion in the gun pit from spreading to the ammunition stored in the squad ammunition pit and to present a more irregular pattern from the air. The connecting trench should be a minimum of three feet deep. The deeper, the better to protect personnel from indirect fire. If the situation and time permits, the trench and ammunition pit should be bunkered or dug underground.

(6) The estimated construction time for the mortar position is 14 man hours when dug with hand tools and 0.5 man hours when dug with a SEE Tractor.

e. Table 1 below depicts characteristics and construction times.

TABLE 1
CHARACTERISTICS OF CREW-SERVED WEAPONS FIGHTING POSITIONS

Type of Position	Estimated Construction Time (Hand Tools)	Estimated Construction Time (See Tractor)	Direct Small Caliber Fire	Indirect Fire Blast and Fragmentation (Direct hit)
Dragon Position	4.0	0.5	12.7mm	NONE
Machine gun Position	7.0	0.8	12.7mm	NONE
Machine gun Position with 1 1/2 overhead cover	12.0	0.8	12.7mm	NONE
Mortar Position	14.0	1.0	12.7mm	NONE

f. Logistical Vehicles Positions

(1) A deep cut vehicle position is prepared to provide protection for support vehicles, such as cargo trucks, maintenance and communication vans.

(2) The position is usually open on each end for drive-through access.

(3) The top of vehicles are at least 1 foot below the top of the surrounding walls.

(4) Camouflage netting is placed across the position if possible.

(5) The deep cut protective position is not used as a fighting position.

g. Tank Positions

(1) Deliberate positions. Deliberate fighting positions are required to protect a vehicle from kinetic energy hypervelocity projectiles. The position is constructed in four parts: hull defilade, concealed access ramp or route, hide area, and turret defilade. Positions formed by natural terrain are best because of easy modification; however, if preparation is necessary, extensive engineer support is required. Each position is camouflaged with either natural vegetation or a camouflaged net. The spoil is flattened out or hauled away. All fighting positions for fighting vehicles (tanks, LAV's, and AAV's) are planned as deliberate positions. If the lack of time does not allow the full construction of a deliberate position, then only some parts of the position's construction are prepared. For example, the complete fighting position for a tank requires the construction of a hull defilade, turret defilade, concealed access ramp or route, and hide area all within the same fighting position. The maneuver commander uses organic and engineer earth moving equipment in the following order:

(a) Hull defilade

(b) Concealed access ramp or route

(c) Hide area

(d) Turret defilade

(2) Developing deliberate fighting positions. Digging hide areas and concealed routes between fighting positions is not practical due to the lack of engineer assets and time. Engineer assets are required to dig the hull and turret defilade positions only. The ramps and concealed routes should require only partial clearing and leveling with blade tanks or engineer equipment because natural concealed routes and hide areas are used. If time permits, the commander has the preceding fighting position expanded into a fighting position with all four parts, as shown, including a hide and turret defilade location. The access ramp from the hide area to the hull defilade position usually provides turret defilade for a vehicle at some point on the ramp. This location is marked with engineer tape and a chem light so the vehicle driver can see the mark and drive to it. This fighting position affords maximum protection and maneuver for the tank.

h. MOUNTED TOW POSITIONS

(1) Mounted TOW firing positions are most often provided by preexisting or natural defilade positions.

(2) Defensive positions are usually characterized by improved frontal and overhead construction.

(3) Cover and Concealment

(a) Positions need concealment from ground and aerial observation.

(b) Positions must have good observation and fields of fire into the assigned sector of fire or engagement areas (EA.).

(c) Positions must have mutual support between squad positions and other elements.

(4) Primary, Alternate, and Supplementary Positions.

(a) The primary position is the most important position because it is from this position the mission can be accomplished

(b) Alternate position is one that replaces the primary position.

(c) Supplementary position is one that replaces both the primary and alternate positions, however, cannot accomplish the primary mission.

(d) Primary and Alternate positions are used in the offense and defense, while supplementary positions are only used in the defense. An alternate position carries the same mission as the position but is physically located in a different area. Whenever possible, an alternate position should be 300 meters or more from the primary or other alternate positions. This reduces the possibility of indirect fire suppressing both the primary and alternate positions at the same time. A supplementary position is a position which fulfills a different mission and is physically located away from both the primary and alternate position. These positions all contribute to effective fire control. Where feasible, all TOW weapon systems should be assigned primary, alternate, and supplementary positions. Good covered and concealed routes between positions are essential to ensure rapid displacement and to prevent detection of movement.

(5) Mounted Position Characteristics- Mounted firing positions are characterized by hull defilade positions where the TOW vehicle is behind either natural or constructed cover with only the TOW launcher exposed. Hull defilade positions should be selected or constructed so that the TOW vehicle can move quickly to complete defilade if enemy fire is encountered.

i. <u>LAV Positions</u>

(1) A light armor vehicle is considered in turret defilade position when the entire vehicle is behind cover, but the commander can still observe to the front from the turret. The turret defilade position is used for protection while observing. When ready to engage the target, it moves into a hull defilade position. Turret defilade positions should be 8'6" deep x 25' long x 10' wide.

(2) A light armor vehicle is in a hull defilade position when the muzzle of the gun/launcher is the lowest part of the vehicle exposed to the front. Use hull defilade for maximum protection when engaging targets with direct fire. Hull defilade should be 5' deep x 25' long x 10' wide.

(3) A light armor vehicle is in a hide position when no part of the vehicle or commander is exposed to the front. This is often used in ambush positions in conjunction with dismounted observers. The vehicle would move forward into a hull defilade on the signal of the observer for the target engagement.

(4) Table 2 below shows the dimensions required for various types of vehicles positions and equipment hours required to construct by mechanical means.

TABLE 2
DIMENSION OF VEHICLE POSITIONS AND ENGINEER
EQUIPMENT BEST SUITED FOR PREPARATION OF THESE POSITIONS

Vehicle Type	Position Dimension			Equip Hr. (Approx.)			
-Deliberate (Hull Defilade)	Length	Width	Depth	Heavy Dozer	ACE	Light Dozer	TRAM
HUMMV TOW CARRIER	22	14	5	.6	.6	.8	.9
AAV	27	17	9	.8	.8	1	1.1
LAV	27	15	6	.8	.8	1	1.1
M1 MAIN BATTLE TANK	32	18	5.5	.9	.9	1.1	1.2
M60 MAIN BATTLE TANK	30	18	6	.9	.9	1.1	1.2

NOTES:

-Deliberate (access route) - Each access route between position or hide location must have the same width as the Hull Defilade. Production time is determined by calculating the volume of soil needed to be moved (cubic yd.) and divide by 100 bank cubic yards per .75 hours.

-Deliberate (Hide Area) - Hide locations are made using natural terrain and concealment. The min. width of the hide location is the same as the deliberate hull defilade. The hide position depth requirement is calculated by increasing the depth given in the deliberate turret defilade position by 15%.

-Deliberate (Turret Defilade)	Length	Width	Depth	Heavy Dozer	ACE	Light Dozer	TRAM
HUMMV TOW CARRIER	22	14	8	.8	.8	1	1.1
AAV	27	17	10	1.2	1.2	1.4	1.5
LAV	27	15	10	1.2	1.2	1.4	1.5
M1 MAIN BATTLE TANK	32	18	9	1.5	1.5	1.7	1.8
M60 MAIN BATTLE TANK	30	18	10	1.5	1.5	1.7	1.8

NOTES:

-Position dimensions provide an approximate 3 foot clearance around vehicle for movement and maintenance.

-Use of natural terrain features will reduce construction time.

-All depths and times are approximate and will need adjustment for surrounding terrain, soil and fields of fire and operator efficiency.

4. SHELTERS/BUNKERS

a. Shelters/Bunkers are the most commonly used structures because they are easy to construct and materials can be obtained through the supply system or open market.

b. Components

(1) Sill

(a) The sill is the first component part of a shelter to be laid out.

(b) Sills are normally of 3" x 12" material, but any three inch material can be used provided it is at least the same width as the post.

(c) Sills distribute the weight from the post to the ground.

(2) Post

(a) Connect the posts to the sill forming a butt joint.

(b) The minimum size lumber required is 6" x 6".

(c)Methods of connecting

1 Drift pinning is the primary method.

2 Toe nailing is the alternate method.

(d) The post supports the weight of the cap and distributes it to the sill.

(3) Cap

(a) The minimum size lumber required is 6" x 6".

(b) Attach the caps to the posts by the same means as the posts are attached to the sills, except that scabs may also be used. Scabbing will be discussed later during this period of instruction.

(c) Caps should be the same width as the posts.

(4) Diagonal Bracing

(a) 3" x 12" material is preferred, but lumber 3" x 6" or larger is acceptable for use.

(b) Run the braces from the top of the post to the sill, not from the top of the post to the bottom of the post.

(5) Sheathing

(a) Normally use 3" x 12" lumber, but any three inch material is acceptable for use.

(b) Place the sheathing parallel to the ground.

(c) Put the sheathing on the exterior of the shelter.

(6) ASSEMBLY METHODS

(a) Drift pinning

(1) Drift pins vary in length and diameter. The most commonly used size is 1/2 inch in diameter and 16 inches long.

(2) Drill a pilot hole prior to driving the drift pin into the timber. This will prevent the timber from splitting.

(3) Drill the pilot hole 1/16" to 1/8" of an inch smaller than the diameter of the drift pin. (If the drift pin is 1/2" diameter, drill a 7/16" or 3/8" diameter pilot hole.)

(b) Toe nailing

(1) Toe nailing is the fastest method for attaching timber.

(2) Drive the nails at a 45 degree angle through one timber into another timber.

(c) Scabbing

(1) The scab should be 18" to 24" inches long, 3" inched thick and the same width as the timber being scabbed.

(2) Place the scab on the inside of the shelter.

(3) Use five to six 60d nails to hold the scab in place.

5. Roof: There are two types of roofs, **laminated** and **stringer**.

(a) Laminated is the strongest and most economical. Laminated roofs are stronger because the timber is layered with all the grains crisscrossed.

1 When using 3" x 12" material, use three layers.

2 Run the first layer across the shortest span.

3 Run the second layer across the longest span.

4 Run the third layer the same as the first layer.

5 When using one inch material, use seven layers

6 When using two inch material, use five layers.

7 When using one inch or two inch material, run the layers the same as when using 3" x 12"'s.

(b) The stringer roof is the weaker of the two roofs.

1 Use a minimum size material of 6" x 6".

2 Lay the material side by side in one layer across the shortest span.

6. FIGHTING POSITIONS

a. The following two fighting positions are designed for use by two or more Marines armed with rifles or machine guns.

b. Adequate support for overhead cover is extremely important. The support system should be strong enough to safely support the roof and soil material and survive the effects of weapons detonations.

(1) Wood frame fighting position. The wood frame or steel frame fighting position consists of prefabricated timber or steel frame support elements that support a timber or concrete roof. The position is useful as a two soldier fighting or observation position in areas where it is dug in.

(2) Fabric covered frame position. This is a position constructed of a metal support frame covered with a strong fabric material which is very effective as a support system for overhead cover. It also provides substantial levels of protection from blast and fragmentation. With 1 1/2 feet of overhead cover, this position will survive detonation of a contact burst 82mm mortar shell on the roof. Similar structures made from harder materials (wood, concrete, landing mat) require 2 1/2 feet of cover material for the same level of protection, due to lack of resilience of the harder materials. The position shown is useful as a one or two soldier fighting position. If the rear wall is omitted, antitank weapons can be fired from this position.

7. BUNKERS

a. Bunkers are larger positions constructed for squad size units who are required to remain in defensive positions for a longer period of time.

b. They are built either above or below ground and are usually made of reinforced concrete, but can also be constructed of wood.

c. Bunkers offer excellent protection against direct fire and indirect fire effects.

d. If properly constructed with appropriate collective protection equipment, they provide protection against chemical and biological agents.

(1) Corrugated metal fighting bunker. This bunker, made from corrugated metal walls, is very useful in areas where digging is not possible. With 1 1/2 foot thick earth filled walls and 2 1/2 feet of overhead cover, this position defeats direct fire and blast and fragments from near miss mortar and artillery shells. For more protection, stack sandbags or push loose earth up against the walls. The upper portion of the structure is left open for maximum visibility in all directions. Firing ports are located in the walls near the floor.

(2) Plywood perimeter bunker. A plywood perimeter bunker is used as an above ground protective security position. The bunker has a post foundation, as shown, or is constructed directly on the ground with earth filled walls.

(3)Concrete log bunker. The concrete log bunker is a four man or Marine fighting bunker constructed of pre cast reinforced concrete logs. Each log weighs approximately 50 pounds per foot and is available in various lengths up to 10 feet. The protection provided by this bunker is significantly improved by the addition of at least one layer of sandbags around each wall. Alternate designs are possible using the various log lengths.

(4) Pre cast concrete slab bunker. The pre cast concrete slab bunker is designed for use where above ground construction is needed, but it is usually placed partially or completely below ground. The rectangular panels are designed for shop fabrication on a large scale basis. Engineer support is required for fabrication and installation. This bunker provides excellent protection, especially if sandbags are stacked or loose earth is pushed up against the walls. When used as an observation bunker, the observation ports are enlarged to include firing ports near the floor.

8. SHELTERS

a. Shelters are primarily constructed to protect Marines, equipment and supplies from enemy action and the weather.

b. Shelters differ from fighting positions because there are usually no provisions for firing weapons from them.

c. The best shelter is one that provides the most protection but requires the least amount of effort to construct.

d. Shelters are constructed with as much overhead cover as possible.

e. They are limited to a maximum capacity of 25 Marines.

f. Three types of shelters: below ground, above ground and cut and cover.

g. All three types of shelters are usually sighted on reverse slopes, in woods or in some form of natural defilade.

(1) Two man sleeping shelter: The design for a two man sleeping shelter is very simple, and is constructed without engineer support. Culvert sections

used in the design are delivered in large quantities by truck or helicopter, and then are hand carried to specific installation sites by intended occupants working in teams of two. These shelters provide good protection from direct fire, small caliber mortars (60 and 82 mm), below 12.7mm size, indirect fire fragmentation, and grenades. With additional cover, the protection level increases to include larger direct fire projectiles. The low profile of the structure makes it a difficult target to hit.

(2) Metal culvert shelter. A metal culvert shelter, quickly constructed above ground, is intended for use in areas where personnel are billeted or work in conventional unprotected buildings, but need shelter in case of attack. For example, shelters are placed outside conventional billets, dining facilities, and large areas of living quarters. The shelter is six feet high and consists of two rows of 55 gallon drums with about a four foot span between rows. 2" X 4" studs, measuring four inches higher than the drums, are centered inside each drum. The drums are then filled with soil. A 2" X 8" top plate is connected to the 2" X 4" studs lengthwise through the bunker. The six foot corrugated metal pipe halves are bolted together and connected to the top plates. A two foot layer of sandbags is placed along each row of drums. To protect the ends of the bunker, barrier walls are erected two feet beyond the entrances. Additional protection is provided on the side and end facing the probable direction of attack by increasing sandbag thickness. This shelter provides protection against mortars and small caliber direct fire weapons.

(3) Metal shipping container shelter. Large metal shipping containers, such as consolidated express (CONEX) containers, are used to make effective shelters. These box shaped containers, with internal dimensions of eight feet long, six feet wide, and six feet high, are easily converted into protective command posts, communication shelters, troop shelters, aid stations, and shelters for critical supplies. Because the CONEX container's floor is stronger than its roof, it is inverted to resist more blast and provide more overhead cover. Although the shelter is sometimes constructed above ground, it is easier to construct it below ground by placing the inverted CONEX container in a hole half its height and then covering its roof with earth.

9. TRENCHES

a. General Information

(1) Trenches are excavated to connect individual fighting positions and weapons positions.

(2) They provide protection and concealment for personnel moving between fighting positions or in and out of the area.

(3) Excavating trenches involves considerable time, effort and materials, and is only justified when an area is occupied for a long time.

(4) They are difficult to camouflage and are easily detected, especially from the air.

(5) Trenches, as other positions, are progressively developed.

b. Crawl Trench

(1) Usually dug 2 to 2 1/2 feet deep and as narrow as possible.

(2) The spoil is placed on both sides of the trench to form a parapet.

(3) Trenches should have a zigzag or winding pattern.

(4) If the trench runs across a forward slope, all the spoil is placed on the enemy side.

(5) All the spoil needs to be concealed from enemy direct observation.

c. Standard Fighting Trench

(1) This trench is developed from the crawl trench to a depth of at least 5 1/2 feet.

(2) Fighting bays or fighting steps are sometimes constructed and must be built into both sides of the trench to provide alternate positions to fight to the rear.

(3) Step off areas for foot traffic are also constructed. These areas provide protection against lengthwise firing into the trench.

(4) While it is primarily used as a fighting position, this trench is also used for communication, supply, evacuation and troop movements.

d. Patterns

(1) General

(a) Trenches are constructed to the length required and follow either an octagonal or zigzag pattern.

(b) Special combinations and modifications are made to meet battlefield demands.

(2) Octagonal Trace

(a) Affords easy communication and provides excellent protection.

(b) Is economical to construct, both in labor and material and can be built with a continuous firing step.

(3) Zigzag Trace

(a) Provides protection from lengthwise fire.

(b) Simple and easy to construct.

(c) Permits both frontal and flanking fire.

10. DEFINITION OF REVETMENT: A revetment is a facing to sustain an embankment or a barricade to provide protection against bombs, splinters, strafing and fragmentation. It serves mainly to support excavated surfaces from the effects of weather and occupation.

a. TYPES OF REVETMENTS

(1) Brushwood Hurdle. A brushwood hurdle is a woven revetment unit usually 6 1/2 feet long and as high as the revetted wall. Pieces of brushwood about 1 inch in diameter are weaved on a framework of sharpened pickets driven into the ground at 20 inch intervals. When completed, the 6 1/2 foot lengths are carried to the position where the pickets are driven in place. The tops of the pickets are tied back to stakes or hold fasts and the ends of the hurdles are wired together.

(2) Continuous Brush. A continuous brush revetment is constructed in place. Sharpened pickets 3 inches in diameter are driven into the bottom of the trench at 30 inch intervals and about 4 inches from the revetted earth face. The space behind the picket is packed with small, straight brushwood laid Horizontally. The tops of the pickets are anchored to stakes or holdouts.

(3) Pole revetment: A pole revetment is similar to the continuous brush revetment except, small poles are placed horizontally and cut to length. For faster construction, boards, or planks are used if available Pickets are held in place by hold fasts, or struts.

(4) Corrugated Metal Sheets or Plywood: A revetment of corrugated metal sheets or plywood is durable, rapidly deployed, and is easy to adapt to the size job, It can be overlapped to obtain any height or length.

(5) Sandbag Revetment: The bags are filled about three-fourths full with earth and the choke cords are tied. The bottom corners of the bags are tucked in after filling. The bottom row of the revetment is constructed by placing all bags as headers. The wall is built using alternate rows of stretchers and headers with the joints broken between courses. The top row of the revetment wall consists of headers. Sandbags are positioned so that the planes between the layers have the same pitch as the base at right angles to the slope of the revetment. All bags are placed so that side seams are on stretchers and choked ends on headers are turned toward the revetted face. As the revetment is built, it is back fill to shape the revetted face to this slope.

(6) If water is allowed to stand in the bottom of an excavation, the position is eventually undermined and becomes useless. Sumps and drains are kept clear of silt and refuse. When wire and pickets are used to support revetment material, the picket may become loose, especially after rain. Improvised braces are wedged across the excavation, at or near floor level, between two opposite pickets. Anchors are tightened by further twisting. Periodic inspections of sandbags are made.

(7) Repairs. If walls crumble at ground level, the soil is removed where it is crumbling, or until firm soil is reached. Sandbags or sod blocks are used to build up the damaged area. If walls are wearing away at the floor level, a plank is placed on its edge and held in with stakes.

REFERENCES MATERIAL:

FM 5-20	CAMOUFLAGE
FM 5-34/MCRP 3-17A	ENGINEER FIELD DATA
FM 5-103	SURVIVABILITY

UNITED STATES MARINE CORPS
COMBAT ENGINEER INSTRUCTION COMPANY
MARINE CORPS ENGINEER SCHOOL
MARINE CORPS BASE
CAMP LEJEUNE, NORTH CAROLINA 28542-0069

C-23G03
5 June 00
(95 POI)

STUDENT HANDOUT

OBSTACLES

1. INTRODUCE LEARNING OBJECTIVE(S)

a. TERMINAL LEARNING OBJECTIVE(S):

(1) Provided personnel, equipment, compass, map, reconnaissance reports, protractor, engineer tape, and a mission specifying types of obstacles to be constructed, and references, direct construction of obstacles so that enemy movement/maneuvers are directed, restricted, delayed or stopped per the references. FM 5-250,FM 5-34/MCRP 3-17A,FM 5-102, and FM 20-32. (1371.3.4)

(2) Provided a mission, an area map, reconnaissance reports, and references, recommend obstacle placement so that enemy movement/maneuvers are directed, delayed or stopped as required by the mission and per the references. FM 5-250,FM 5-34/MCRP 3-17A,FM 5-102, and FM 20-32. (1371.3.5)

b. ENABLING LEARNING OBJECTIVE (S)

(1) Given a map, reconnaissance reports, protractor, and a mission specifying types of obstacles to be constructed, as a member of a team, identify obstacles on a barrier plan per the references. FM 5-250,FM 5-34/MCRP 3-17A,FM 5-102, and FM 20-32. (1371.3.4a)

(2) Given a map, reconnaissance report, protractor, a mission specifying types and locations, as a member of a team, develop a plan to effectively employ obstacles per the references. FM 5-250,FM 5-34/MCRP 3-17A,FM 5-102, and FM 20-32. (1371.3.4b)

(3) Given a map, reconnaissance report, protractor, a mission, as a member of a team, identify obstacles usage per the references. FM 5-250,FM 5-34/MCRP 3-17A,FM 5-102, and FM 20-32. (1371.3.5a)

(4) Given a tactical situation, a mission, an area map, reconnaissance reports, as a member of a team, estimate and construct obstacles per the references. FM 5-250,FM 5-34/MCRP 3-17A,FM 5-102, and FM 20-32. (1371.3.5b)

1. DEFINITION. An obstacle is defined as any obstruction that stops, delays, or restricts movement or maneuver. Obstacles are existing such as a river or a cliff, or reinforcing such as a minefield or tank ditch.

2. TYPES OF OBSTACLES. Obstacles are grouped into two general categories: existing and reinforcing.

a. Existing Obstacles. Existing obstacles are already present on the battlefield and not placed there through military effort. They may be natural such as lakes, mountains, or they can be cultural such as towns or railroad embankments.

(1) Large Rivers. Large unfordable rivers are formidable obstacles because they must be crossed by tactical bridging, swimming, ferrying, or special deep water fording.

(2) Small rivers, streams, and canals. Minor fordable rivers, streams and canals are much more numerous than major rivers and their tactical value as obstacles should not be overlooked.

(a) A stream is a minor hindrance when a ford is available and usable with little or no improvement. A stream is a major hindrance if a suitable ford is lacking, or if fording requires considerate preparation of approaches, reinforcement of bottoms, or the use of special equipment on vehicles.

(b) Fording. Fordability of a stream expresses how easily it may be crossed without the means of bridging or ferrying. The significant characteristics of streams are:

1 Width of Channel. A tank can bridge stream channels less than 3 meters wide; however, wheeled vehicles do not have this capability. Once the self-bridging capability of tracked vehicles is exceeded, streams can only be crossed by bridging ferrying, or fording.

2 Depth of Water. For fording, the permissible maximum depth of water for most tanks is between 0.9 to 1.5 meters (3 to 5 feet) and for trucks, about 0.9 meter (3 feet). However some vehicles can be equipped with deep water fording devices that will enable them to cross water bodies as deep as 17 to 20 feet.

3 Velocity of Water. Stream velocities of 1.5 meters (5 feet) per second or less are reasonably safe for fording.

4 Nature of bottom. Bottoms made up of fine-grained material can prevent fording even though the water may be only a few inches deep.

5 Banks. Hard, vertical banks will be obstacles to tanks, if bank height exceeds 1.5 meters (4 feet), and to trucks if bank height exceeds 1 foot. The type of material composing the banks is significant. Banks made of fine-grained soils may fail under repeated traffic. Sandy and gravely materials usually provide adequate strength and durability.

(3) Lakes. Large lakes make excellent obstacles. They are usually unfordable, unable to be bridged, and must be bypassed. Because lakes can be crossed by amphibious vehicles or boats, beach and underwater obstacles should be used to discourage enemy crossing efforts.

(4) Swamps, Marshes, and Bogs. Wetlands severely restrict mobility and, force the canalization of vehicular movement onto causeways. They also

greatly increase vulnerability to air attack, artillery, or direct fire weapons. Historically swamps have been avoided by attacking armies.

(5) Snow. Snow is a hindrance and hazard to wheeled vehicles, as most will become immobilized when the depth of the snow reaches one-third of the diameter of the tire. Snow reduces slope climbing ability, maximum payload capacity, maneuverability and speed at all vehicle operations.

(6) Slopes. Slope is the inclined surface of a hill, mountain, ridge or any other part of the earth's land surface. Short, vertical slopes or "steps" higher than 0.3 meter (1 foot), will slow wheeled vehicles, and 1.5 meters (4 feet) will stop tanks.

b. Reinforcing Obstacles. Those obstacles specifically constructed, or detonated to improve the effectiveness of existing obstacles. They are placed for the purpose of anticipated military action or action already in progress. Types include:

(1) Demolition. Demolition obstacles are created by the detonation of explosives. They are commonly used to reinforce obstacles. Some typical uses of demolition obstacles are:

(a) Blowing craters in roads, airfields, and railroads.

(b) Destroying bridges or tunnels.

(c) Flooding areas by destruction of dams or locks.

(d) Creating abatis by felling trees.

(e) Blowing ditches

(f) Detonating pre chambered roads and bridges.

(2) Constructed. Constructed obstacles are those that are built by Marines and machinery, generally without the use of explosives.

(a) Types.

(1) Wire

(2) Tank ditches

(3) Steel beam post obstacles

(4) Falling or tumble blocks

(5) Dragons teeth, hedgehogs, and tetrahedrons

(6) Log posts, hurdles and cribs

(b) Constructed obstacles generally require extensive amounts of manpower, equipment, material and/or time.

(c) Marines and construction equipment can be exposed to all types of enemy fire when emplacing constructed obstacles. They should be emplaced prior to the start of the battle, or a terrain feature away from direct engagement areas, so that observed fire cannot disrupt the emplacement process.

(3) Land Mines.

(a) Conventional. Conventional mines are those mines not designed to self-destruct. They are designed to be directly emplaced by hand or mechanical mine equipment, and can be buried or surface laid.

(b) Scattering Mines. Scattering mines are those mines that are designed to self-destruct after a set period of time. They can be emplaced by a variety of delivery systems.

(1) Artillery Delivered - ADAMS/RAAMS

(2) Helicopter and high performance aircraft

(3) Mechanical ground systems - GEMSS, FLIPPER

(4) Explosively scattered ground Systems - MOPMS

(4) Contamination. Contamination can be either nuclear or chemical in nature.

(5) Expedient. The potential of expedient obstacles is almost unlimited. They place a great premium on imagination and ingenuity in the use of available materials and other resources, thus avoiding the logistical burden associated with all other types of obstacles. These may include:

(a) Nonstandard log obstacles.

(b) Junked vehicles or other debris can be spread to block an open area.

(c) Selected trees can be pushed over to make an abatis or to strengthen a wooded area where tree spacing may otherwise allow armored vehicles to pass.

(d) Short ditches can be cut in lieu of craters.

(e) Equipment can steepen or deepen stream banks, gullies or other breaks in the terrain to make expedient tank ditches.

3. PRINCIPLES OF OBSTACLE EMPLOYMENT

a. Reinforcing obstacles support the maneuver commander’s plan, and must be covered by observation and fire.

(1) Reinforcing obstacles must be planned and emplaced to support the tactical plan. Obstacles other than mines emplaced outside the range of friendly weapons are of little use, other than to disrupt enemy rear areas.

(2) Engineers must be completely familiar with the tactical plan, the existing terrain, and the maneuver commander's intent.

b. Reinforcing obstacles are integrated with observed fires.

(1) Obstacles are used to develop engagement areas in which enemy maneuver is restricted and slowed, thereby increasing the hit probability of friendly direct and indirect fire.

(2) The tactical commander and engineer site the obstacles that offer the best relative advantage, and consider terrain configuration and the effective weapons range.

(3) Special attention must be given to locating obstacles to complement the fires of Dragon, tanks and TOWs. Since TOWs have a greater maximum effective range than threat tanks, it is to our distinct advantage to site part of the tactical obstacle system to capitalize on that difference.

(4) Observed indirect fires are also used in conjunction with obstacles against enemy vehicles and infantry out in the open. Observation and adjustment of fires is essential if the full advantage is to be developed. At the same time, fires serve to protect the obstacle by making it costly to breach or bypass.

c. Reinforcing obstacles are integrated with existing obstacles and with other reinforcing obstacles.

(1) Reinforcing obstacles are sited to take the maximum advantages of existing obstacles. They are placed where they can close the gaps on openings between existing obstacles and close any passage through them.

(2) The first obstacles planned are bridge demolition's, road craters, abatis and point or small minefields that tie together the existing obstacles areas and close the passage through them.

(3) Effective reinforcement of existing obstacles also enhances economy of force operations by permitting friendly forces to concentrate on terrain approaches.

(4) The design width of an obstacle is the distance from an existing obstacle to another and not the width of a road or highway through the existing obstacle.

(5) Reinforcing obstacles are integrated with each other to ensure that probable bypass routes are closed. For example, destruction of a major highway though a wooded area is largely ineffective if nearby road or opening that offers a ready bypass route is left open.

d. Reinforcing obstacles are employed in depth.

(1) A series of simple obstacles arranged one behind the other along a probable axis of enemy advance is more effective then a large, elaborate obstacle.

(2) Obstacles must not be located too close together so only a single enemy response is required. They must be far enough apart that each will require a new deployment of the enemy counter obstacle forces and/or equipment.

The distance between will depend on the terrain and the obstacle effort available.

(3) Another reason for using a greater number of less elaborate obstacles is that each one forces the enemy to expose his limited counter obstacle equipment and personnel to loss. When the counter obstacle resources initially allotted to the leading elements have been destroyed, the enemy's movement will be severely slowed until new counter obstacle units can be brought forward.

e. Reinforcing Obstacles are employed for surprise.

(1) Using obstacles so as to obtain surprise is one means available to the commander to retain a degree of initiative even when defending.

(2) FASCAM permits rapid mining anywhere in the battle area, confronting the attacker with a completely new situation almost instantly.

(3) The self-destruct feature of the scatterable mine also provides surprise. A friendly counterattack may be launched through an area that was mined prior to the attack but where the mines have just self-destructed.

(4) More conventional ways to obtain surprise are also available and should be used. They include the sudden detonation of concealed obstacles in front of the attacking enemy or with in his formation.

(5) Conventional ways also include the use of phony obstacles to mislead the enemy as to the pattern and extent to the friendly obstacle system an obvious pattern of obstacle would divulge locations of units and weapons.

(6) Terrain masking is another way to achieve surprise. This technique has the greatest effect on advance guard or armored reconnaissance units.

4. OBSTACLE PLANNING. The obstacle plan support the tactical plan in both offensive and defensive operations

a. Analyze the Mission. (The who, what, where, and when of an operation)

(1) The who task organization that allocates resources to do the job.

(2) The what specifies the type of operations as in defend attack or delay.

(3) The where outlines the area of operatives.

(4) The when specifies the time available and essentially established deadlines.

b. Analyze Avenues of Approach.

(1) Terrain analysis techniques and existing obstacle evaluation are performed.

(2) The engineer must visualize with the commander avenues of approach under all conditions, and determine the size of friendly and enemy forces those avenues can support.

c. Analyze Battle Area and Locations of Weapons Systems.

(1) By planning offensive combat, pick the most likely area where friendly forces could expect to engage the enemy with direct fire weapons.

(2) Analysis of existing obstacles, fields of fire, and natural cover and concealment are key factors in determining where to best engage or expect the enemy.

(3) The engagement areas and methods of engagement are selected. There are two methods of engagement: massed surprise fires, and concentric rings of ever increasing volumes of fire.

d. Determine Obstacle Locations and Type.

(1) The commander and the engineer will select the site for all the reinforcing obstacles necessary without regard for manpower, time, and logistics.

(2) The above selection process will determine what "needs" to be done, in order for the obstacle system to be the most effective.

e. Determining the Commander’s Obstacle Priorities.

(1) The engineer has the commander's priorities for obstacles. The engineer finds out what needs to be done.

(2) The engineer is given directions to employ resources knowing the effort is expended on those obstacles most critical for accomplishing the command objective.

f. Determine Resources.

(1) The engineer takes the commanders priorities and makes an estimate based upon time, manpower, equipment and logistics.

(2) The engineer must know how much of each resource is required to emplace and execute a given obstacle.

g. Determine Actual Work Sequence.

(1) Considering the time available, work force, and logistical assets, the engineer and the commander must identify those obstacles that can realistically be completed before and during the battle.

(2) Some questions that must be answered include:

(a) Does the unit have hours, days, or weeks before the battle?

(b) What are the limits of obstacle logistic assets available?

(c) To what extent can the engineer unit be augmented by other members of the combined arms team?

h. Determine Task Organization Required/Forces Needed to Install Obstacles.

(1) There may be fewer engineers allocated to the task force than desired.

(2) Additional engineer assets may come from the organic engineer battalion, combat service support element, air combat element. (These can all be augmented by supported units).

i. Determine Coordination Required. Extensive coordination is required to accomplish logistic and fire support of the obstacle system. Coordination must be made with the fire support coordinator, aviation officer (supported unit), air liaison officer, tank officer. G-2/S-2, G-3/S-3, G-4/S-4 and other special staff.

(1) Obstacle must also be coordinated with follow-on and adjacent units to ensure that the location and extent of the obstacle system are known.

(2) If followed, the planning sequence is a workable, realistic and coordinated approach to planning obstacle employment.

j. Offensive Planning Consideration.

(1) Prevent enemy reinforcement—deters the enemy from reinforcing weak areas under friendly attack.

(2) Facilitate economy of force. Obstacles (mines) can be used in selected sectors to allow defense by reduced forces.

(3) Provide security. Mines and booby traps may be placed along flanks of advancing forces in critical areas to halt or slow enemy counterattacks and provide flank security.

(4) The **5 key factors for counter mobility** activity during offensive operations.

(a) Enemy situation and capabilities.

(b) A good terrain analysis to determine where friendly forces are vulnerable to counterattack.

(c) Speed of obstacle emplacement.

(d) Preplanning and coordination.

(e) Information flow to inform friendly forces of friendly and enemy forces obstacle location.

k. Defensive Planning Considerations. (May be one or more of the following)

(1) Cause an enemy attack to fail.

(2) Gain time.

(3) Concentrate forces elsewhere.

(4) Wear down enemy forces as a prelude to offensive operations.

(5) Control essential terrain.

(6) Retain tactical, strategic, or political objectives

(7) Remember: an underlying purpose of most defensive operations is to create the opportunity to change to the offense.

(8) The **four key factors or terms of defensive doctrine**, which outline the requirements for a successful defense:

(a) Initiative. Seize the tactical initiative locally, then progress.

(b) Depth. Fight the enemy through the depth of its formation to delay and disorganize and to create opportunities for counterattack.

(c) Agility. Set the terms of battle through flexible use of fire maneuver and electronic warfare.

(d) Combined Arms. The use of all available tools of battle in a well coordinated combat action. Violent execution of plans and aggressive exploitation of the enemy's vulnerabilities can halt the momentum of the attacking force.

l. Key Words To Remember.

(1) BAMCIS: Begin planning, Arrange reconnaissance, Complete the plan, Issue the orders, and Supervise.

(2) METT-TSL: Mission, Enemy, Terrain and Weather, Troops an Fire Support available, Time, Space and Logistic restrictions.

(3) KOCOA: Key terrain, Obstacles, Cover and Concealment, Observation and fields of fire, Avenues of approach.

5. WIRE OBSTACLE EMPLOYMENT

a. Purpose. Barbed wire entanglements are artificial obstacles designed to impede the movement of foot troops and, in some cases, tracked and wheeled vehicles. The materials used in constructing barbed wire entanglements are relatively lightweight and inexpensive, considering the protection they afford. Barbed wire entanglements can be breached by fire, wire obstacles are built rapidly, repaired, and reinforced rapidly.

b. Siting and Layout. To be effective, barbed wire entanglements are sited and laid out to meet the following requirements:

(1) Under friendly observation, covered by fire, and where practicable, protected by antipersonnel mines, flame mines, trip flares, and warning devices.

(2) Concealed from enemy observation as far as practicable by incorporating terrain features such as reverse slopes, hedges, woods, paths and fence lines.

(3) Erected in irregular and non-geometrical traces.

(4) Employed in bands or zones wherever practicable.

(5) Coordinated with other elements of the defense.

c. Classification. Entanglements are classified according their use and their depth and whether fixed or portable.

(1) Use. Entanglements are classified by use as tactical, protective, or supplementary. The employment of these types in a defensive area is shown schematically in Figure 3-3 in your FM 5-34.

(a) Tactical. Tactical wire entanglements are sited parallel to and along the friendly side of the final protective line. They are used to break up enemy attack formations and to hold the enemy in areas covered by the most intense defensive fire. Tactical entanglements extend across the entire front of a position but are not necessarily continuous.

(b) Protective. Protective wire entanglements are located to prevent surprise assaults from points close to the defense area. As in the case of all antipersonnel obstacles, they are close enough to the defense area for day and night observation and far enough away to prevent the enemy from using effectively from points just beyond the obstacle, normally 40 to 100 meters (131 to 328 ft). Protective wire surrounds the individual units of a command, usually the platoons, to enclose entire defensive positions. Protective entanglements are erected around rear-area installations in the same manner and to serve the same purpose as protective wire around defensive positions in forward areas. Protective wire also includes the entanglements, which should be installed over the tops of installations provided with overhead cover.

(c) Supplementary. Supplementary wire entanglements in front of the forward edge of the battle area are used to conceal the exact line of the tactical wire. To the rear of the FEBA, supplementary wire is used to enclose the entire defensive position by connecting the protective wire entanglements. Supplementary wire entanglements used to break up the line of tactical wire should be identical to the tactical wire entanglements and constructed simultaneously with them whenever possible.

(2) Depth. Entanglements are classified by depth as belts, bands, or zones.

(a) Belt. A belt is an entanglement one fence in depth.

(b) Band. A band consists of two or more belts in depth, with no interval between them. The belts may be fences of the same type, or the band may be composed to two or more fences of different types.

(c) Zone. A zone consists of two or more bands or belts in depth, with intervals between them.

(3) Equivalent effectiveness. Entanglement depths are also described or specified in terms of comparative effectiveness. Tactical wire entanglements should be equivalent in effectiveness to three belts of 4 and 2 pace double apron fence whenever possible. Protective wire may employ any type of entanglement provided its effectiveness is at least the equivalent of that of the 4 and 2 pace double apron fence. Supplementary wire should have an effectiveness equivalent to that of the type of wire it supplements. It should be equivalent to tactical wire or equivalent to the type of protective wire being used if it connects the outer perimeters of protective wire at the flanks and rear.

(4) Portability.

(a) Fixed entanglements are those types which must be erected in place and which cannot be moved unless completely disassembled.

(b) Portable entanglements are those types, which can be moved without complete disassembly. Portable entanglements have been developed for one of the following reasons: To permit assembly in rear areas, with ease of transportation and rapid installation in forward positions, and for the temporary closing of gaps or lanes which can be reopened quickly for patrols or counterattacking forces.

(c) Lanes and Gaps. Lanes and gaps are provided for the passage of patrols, working parties, and attacking or counterattacking forces. When not in use they are kept closed by the use of portable obstacles covered by fire. Lanes and Gaps are staggered in a zigzag pattern.

(d) Uses.

(1) Outpost area. The combat outpost should be surrounded with wire entanglements. These entanglements should be carefully sited to serve as both protective and tactical wire and must be covered by small arms fire. The wire obstacle should be supplemented by antipersonnel mines, warning devices, and booby traps.

(2) Battle position. In the battle area, each company defense position is normally surrounded by a wire entanglement, which is connected laterally across the front to the entanglements surrounding the other units in the position.

(3) Artillery and reserve area. Wire entanglements are used in the outer protection of howitzer positions. Heavier weapons, and shelters or other installations in the reserve area, are similarly protected if justified by the situation.

(4) Antipersonnel obstacles. Barbed wire entanglements, trip flares, noisemakers, and antipersonnel mines are sited to warn against enemy patrol action or infiltration at night, to prevent the enemy from delivering a surprise attack from positions close to the defenders, and to hold, fix or delay the enemy in the most effective killing ground. Such obstacles should be near

enough to defensive positions for adequate surveillance by the defenders by night and day and far enough away to prevent the enemy from using hand grenades against the defender from points just beyond the obstacles.

(5) As Roadblocks. A series of barbed wire concertina can stop wheeled vehicles. A series of these blocks placed about 10 meters apart should be used. The ends of adjacent coils are wired together and the obstacle lightly anchored at the sides of the road. The block should be sited to achieve surprise.

(6) To Strengthen Natural Obstacles. Deep rivers, canals, swamps, and cliffs which form effective delaying obstacles to infantry, and thick hedgerows, fences, and woods, which are only partial obstacles, can be improved by lacing with barbed wire. This can be done by the addition of pats of standard fences on one or both sides, or by entangling with loose wire.

6. WIRE OBSTACLE CONSTRUCTION PROCEDURES

a. Table 3-4 in FM 5-34 give the materials and man-hours required for entanglements of the various types. The normal sizes of work crews are given in the descriptions of the entanglements. For each construction project, the senior noncommissioned officer divides his crew into groups of approximately equal size, based on his knowledge of the skill and speed of each man. He organizes them in such a way the construction proceeds in proper order and at a uniform rate. Each individual must know exactly what his group is to do and his job in the group. Each man should have barbed wire gauntlets. The sequence of operations for each fence is given in the paragraph describing the erection of the fence. The sequence that is outlined should be followed, and as experience is gained, the size and composition of the groups may vary. For each section of entanglement, all fence-building operations normally proceed from right to left, as one faces the enemy. It may, however, be necessary to work from left to right, and men should, if time permits, be taught to work in either direction. In case of heavy casualties, the senior officer or NCO will decide what wires, if any are to be omitted.

b. Construction at Night. For night construction the following additional preparations are made.

(1) Tracing tape should be laid from the materials dump to the site of work and then along the line of fence where possible.

(2) Materials should be tied together in man loads and pickets bundled tightly to prevent rattling.

(3) Wire fastenings or wire coils and pickets should be removed and replaced with string which can be broken easily.

(4) A piece of tape should be tied to the ends of the wire on each reel or bobbin.

c. Supervision. Proper supervision of entanglement construction includes the following:

(1) Proper organization of the work into tasks.

(2) Ensure the tasks are carried out in the proper sequence.

(3) Prevention of bunching and overcrowding of personnel.

(4) Ensure the wires are tightened properly and spaced correctly.

(5) Checking ties to see that they are being made correctly and at the right points.

d. Construction in Combat Areas. When working in close proximity to the enemy, the necessary precautions include:

(1) Provision of security around the work party.

(2) Silence

(3) No working on enemy side of fence unless absolutely necessary.

(4) Use of screw pickets, if available.

(5) Men not working should lie down near start of work until they can continue their work.

(6) Individual weapons must be kept nearby at all times.

e. Four Strand Cattle Fence.

(1) Description. The four-strand center section of a double apron fence can be installed rapidly to obtain some obstacle effect, and aprons can be added later to develop it into a double apron fence. In country where wire fences are used by farmers, obstacles in the form of four-strand cattle fences (Figure 3-9 in FM 5-34) will blend with the landscape. Their design should follow as closely as possible the local custom, usually wooden pickets at about 2 to 4 pace intervals with four horizontal strands of barbed wire fixed to them. They should be sited along footpaths and edges of fields or crops, where they will not look out of place. If conditions permit, this fence may be improved by installing guy wires in the same manner as the diagonal wires of the double apron fence. All longitudinal wires of this fence must start and end at an anchor picket.

(2) Construction. Eight men may be employed on short sections of this fence and up to 16 men on 300-meter (984-ft) sections. The two operations are laying out and installing pickets and installing wire.

(a) First operation. The working party is divided into two groups of approximately equal size. The first group carries and lays out long pickets at 3 meter (9.8 ft) intervals along the centerline of the fence, beginning and ending the section with an anchor picket and including anchor pickets for guys if needed. The second group installs the pickets.

(b) Second operation. As the first task is completed, men move individually to the head of the fence and are organized into teams of two or four men to install wires. For four man teams, two men carry the reel and two men make ties and pull the wire tight. For two man teams, the wire must first

be unrolled for 50 to 100 meters (164 to 328 ft). The men then come back to the head of the work and make the ties, or the wire may first be made up into bobbins to be carried and unwound by one man while the other man makes the ties. The first team installs the bottom fence wire, and draws it tight and close to the ground. Succeeding teams install the next wires in order.

f. Double-Apron Fence

(1) Types. There are two types of double apron fence, the 4 and 2 pace fence and the 6 and 3 pace fence. The 4 and 2 pace fence (Figure 3-5, FM 5-34) is the better obstacle of the two and is the type more commonly used. In this fence the center pickets are 4 paces apart and the anchor pickets are 2 paces from the line of the center pickets and opposite the midpoint of the space between center pickets. The 6 and 3 pace fence follows the same pattern with pickets at 6 and 3 pace intervals. For this fence, less material and construction time are required, but the obstacle effect is substantially reduced, since the longer wire spans makes it easier to raise the lower wires and crawl under them. Except for picket spacing, the 4 and 2 pace and the 6 and 3 pace fences are identical. Only the 4 and 2 pace fence is discussed in detail.

(2) Construction. A 300-meter (984-ft) section of either type of double apron fence is a platoon task normally requiring 1 1/2 hours, assuming 36 productive men per platoon. There are two operations in building a double apron fence: the first operation is nearly completed prior to starting the second. The second operation is started as men become available and the first operation has moved far enough ahead to avoid congestion. A platoon is normally assigned to build a 300-meter (984-ft) section.

(a) First operation. The working party, if not organized in three squads, is divided into three groups of approximately equal size. One squad lays out the long pickets along the centerline of the fence at four pace intervals at the spots where they are to be installed and with their points toward the enemy. Another squad lays out the anchor pickets, with points toward the enemy and positioned two paces each way from the centerline and midway between the long pickets. The spacing is readily checked with a long picket. The third squad installs all the pickets, with the help of the two other squads as the latter finish the work of laying out the pickets. When installed, the lower notch or bottom eye of the long pickets should be approximately 10.

(b) Second operation. As the groups complete the first operation, they return to the head of the fence and begin installing wire. The order in which the wires are installed is shown in Figure 3-5 (FM5-34). Care must be taken to avoid having any of the men cut off between the fence and the enemy. The men are divided into two or four man groups and proceed to install the wires in numerical order; that is, as soon as the men installing one wire have moved away from the beginning of the fence and are out of the way, the next wire is started. Installations is as follows:

1. The # 1 wire is the diagonal wire on the enemy side and is secured with a top eye tie to all pickets. It is important to keep this wire tight.

2. The # 2 wire is the tripwire on the enemy side of the fence and is secured to both diagonals just above the anchor picket with the apron tie. This wire must be tight enough and close enough to the ground to make passage over or under the wire difficult.

3. The # 3 wire is an apron wire on the enemy side of the fence. It is secured to the first diagonal wire, and thereafter to each alternate diagonal, and then to the last diagonal wire (# 1), thereafter to the diagonal wires which are not tied to the # 3 wire, and then to the last diagonal wire. Apron wires Nos. 3 and 4 are equally spaced along the diagonal wire.

4. The # 5 wire is the first one which is not started from the end anchor picket. It is started at the first long picket, and ended at the last long picket. It is secured with the intermediate eye tie and is stretched tightly to prevent passage over or under it.

5. Wires 6, 7, and 8 complete the center portion of the fence and are secured to the long picket # 6 and 7 with the intermediate eye tie. They also start at the first end at the last long picket. # 8 is secured with the top eye tie. These wires (# 6, 7 and 8) form the backbone of the fence and are drawn up tightly hold the pickets in position.

6. Wire 9 is the diagonal apron wire on the friendly side of the fence and is secured with the top eye tie to all pickets. # 10 and 11 are apron wires and # 12 is the tripwire on the friendly side of the fence. Wire 12 is installed in the same manner as wire 2 above.

g. Triple Standard Concertina Fence

(1) Description. This consists of two lines of concertinas serving as a base, with a third line resting on top, as shown in Figure 3-6 (FM 5-34). All lines are installed with staggered joints. Each line is completed before the next is started so that a partially completed concertina entanglement presents some obstruction. It is erected quickly and is difficult to cross, cut, or crawl through.

(2) Detail. A 300-meter (984-ft) section of this fence is a platoon task normally requiring less than 1 hour. There are two operations, carrying and laying out pickets and concertina rolls and installing pickets, and opening and installing concertinas.

(3) First Operation. For the first operation, the working party is divided into three groups of approximately equal size: one to lay out all pickets, one to install all pickets, and one to lay out all concertina rolls.

(a) The first group lays out front row long pickets at 5 pace intervals on the line of the fence with points of pickets on line and pointing toward the enemy. The rear row long pickets are then laid out on a line .9 meters (3 ft) to the rear and opposite the center of interval between the front row long pickets. An anchor picket is laid out at each end of each line, 1.5 meters (5 ft) from the end long picket.

(b) The second group installs pickets beginning with the front row. As in other fences, eyes of screw pickets are to the right. Concave faces of "U" shaped pickets are toward the enemy.

(c) The third group lays out concertinas along the rows of pickets. In the front row, one roll is placed at the third picket and one at every fourth picket thereafter. Sixteen staples accompany each front row concertina. In the second row, two rolls are placed at the third picket and two at every fourth picket thereafter. As each roll is place in position, its binding wires are unfastened but are left attached to the hoop at one end of the roll.

(4) Second Operation. As they complete the first operation, all men are organized in four man parties to open and install concertinas, beginning at the head of the fence.

(a) Open the front row concertinas in front of the double line of pickets and the other two in its rear.

(b) Lift each front row concertina in turn and drop it over the long pickets, then join concertina ends.

(c) Fasten the bottom of the concertina to the ground by driving a staple over each pair of end hoops, one over the bottom of a coil at each long picket, and one at the 1/2 and 1/4 points of the 3.8-meter (12.5-ft) picket spacing. Securing the front concertina to the ground is essential and must be done before installing another concertina in its rear unless the enemy side of the entanglement is sure to be accessible later.

(d) Stretch a barbed wire strand along the top of each front row and fasten it to the tops of the long pickets, using the top eye tie for screw pickets. These wires are stretched as tightly as possible to improve the resistance of the fence against crushing.

(e) Install the rear row concertina in the top row fastening the end hoops of 15-meter (50-ft) sections with plain steel wire ties. Begin this row at a point between the ends of the front and rear of the lower rows, thus breaking all end joints.

(f) Rack the top concertina to the rear horizontal wire at points halfway between the long pickets. If there is safe access to the enemy side of the fence, similarly rack the top concertina to the forward horizontal wire.

7. MATERIAL AND LABOR ESTIMATES FOR WIRE OBSTACLES

a. Basic Considerations. Barbed wire obstacles are constructed primarily from issue materials, thus, both logistical and construction estimates are involved. Table 3-3 (FM 5-34) gives weights, lengths, and other data required for estimating truck transportation and carrying party mating truck transportation and carrying party requirements. Table 3-4 (FM 5-34) gives the material and labor requirements for construction of various wire entanglements. This table is based on daylight work; for night work the man-hours must be increased 50 percent.

b. Requirements for a Defensive Position

(1) Method of Estimating. Table 3-4 (FM 5-34) gives estimates for 300-meter section of entanglements and weights of material per linear meter of entanglement. If a layout to scale can be developed, the lengths of the various types of entanglements are scaled and the quantities and weights are computed. If a scaled layout cannot be prepared, rules of thumb may be used for estimating the required lengths of tactical and protective wire entanglements. If the length of front is taken as the straight-line distance between limiting points, the rules are:

(a) Length of tactical wire entanglement is 1 1/4 times the length of front, times the number of belts regardless of the size of the unit involved.

(b) Length of protective wire entanglement for a defensive position is five times the length of the front being defended times the number of belts. Since protective wire encircles each platoon area of a command, the protective wire entanglement for units is 2.5 times the average platoon frontage times the number of platoons involved.

(c) Supplementary wire in front of the FEBA is used to break up the line of tactical entanglements. Its length is 1¼ times the unit's frontage times the number of belts. The length of the supplementary wire entanglement behind the FEBA is approximately equal to 2½ times the distance from the FEBA to the rearmost reserve unit times the number of belts. This rule of thumb is adequate for all units.

Example: You are given a defensive position with a frontage of 1,800 meters (5,904 ft) and a depth of 900 meters (2,952 ft). The tactical wire entanglement is a band consisting of three belts of triple stand concertina fence. The protective entanglement is a band consisting of two belts of 4 and 2 pace double apron fence. The supplementary entanglements are the same type and depth as the entanglements they supplement. Only screw pickets are available. The work is done during daylight hours with inexperienced personnel.

REQUIRED:

1. Material to be requisitioned.
2. Man hours to construct.
3. Number of 5 ton truckloads (to permit cross-country travel, each truck will carry only 5 tons).

SOLUTION: Tactical

1. Length of trace of entanglement:
(rule of thumb constant) x (frontage) x (number of belts) = length of trace

2. Sections of fence:
(length of trace)
(fence is estimated in 300m increments) = sections

3. Short pickets:
(# of sections) x (# of short pickets) = total # of short pickets

4. Long pickets:
(# of sections) x (# of long pickets) = total # of long pickets

5. Concertina:
(# of sections) x (# of concertinas per 300m section on chart) = total rolls of concertina

6. Staples:
(# of sections) x (# of staples per 300m section on chart) = total # of staples

7. 400-m (1,320 ft) reels:
(# of sections) x (# of belts) = total reels of barbed wire

8. Man-hours to construct:
(# of sections) x (# of man hours to construct) = total man hours to construct wire entanglement

NOTE IF AN EXPERIENCED CREW IS USED, YOU MUST MULTIPLY THE CONSTANT TIMES (.67). DURING NIGHT HOURS, YOU MUST MULTIPLY THE CONSTANT TIMES (1.5). SUBSTITUTE THAT NUMBER INSTEAD OF THE CONSTANT FOR MAN-HOURS. IF EXPERIENCED CREW AND AT NIGHT, YOU MUST MULTIPLY THE CONSTANT BY BOTH (.67) AND (1.5) TO GET THE CORRECT AMOUNT OF MAN HOURS TO CONSTRUCT THE WIRE ENTANGLEMENT. SUBSTITUTE THAT NUMBER INSTEAD OF THE CONSTANT FOR MAN-HOURS.

9. 5-ton truck loads:

$$\frac{(\text{length of trace}) \times (\text{Kilograms of materials per linear meter})}{(5 \text{ ton truck}) \times (\text{ton in pounds}) \times (1 \text{ pound converted into kilograms})}$$

(1 pound = 0.4536 kilogram)

Protective

1. Length of trace of entanglement:
(rule of thumb constant) x (frontage) x (# of belts) = length of trace

2. Sections of fence: $\frac{(\text{length of trace})}{(\text{fence is estimated in 300m increments})}$ = total # of sections

3. Short pickets: (# of sections) x (# of short pickets) = total # of short pickets

4. Long pickets: (# of sections) x (# of long pickets) = total # of long pickets

5. 400-meter (1,320 ft) reels: (# of sections) x (# of belts) = total reels of barbed wire

6. Man-hours to construct: (# of sections) x (# of man hours to construct) = total man hours to construct wire entanglement

NOTE IF AN EXPERIENCED CREW IS USED, YOU MUST MULTIPLY THE CONSTANT TIMES (.67). DURING NIGHT HOURS, YOU MUST MULTIPLY THE CONSTANT TIMES (1.5). SUBSTITUTE THAT NUMBER INSTEAD OF THE CONSTANT FOR MAN-HOURS. IF EXPERIENCED CREW AND AT NIGHT, YOU MUST MULTIPLY THE CONSTANT BY BOTH (.67) AND (1.5) TO GET THE CORRECT AMOUNT OF MAN HOURS TO CONSTRUCT THE WIRE ENTANGLEMENT. SUBSTITUTE THAT NUMBER INSTEAD OF THE CONSTANT FOR MAN-HOURS.

7. 5-ton truck loads:
(length of trace) x (Kilograms of materials per linear meter)
(5 ton truck) x (ton in pounds) x (1 pound converted into kilograms)
(1 pound = 0.4536 kilogram)

Supplementary (in front of FEBA)
Same as tactical.

Supplementary (behind FEBA)

1. Length of trace of entanglement:
(rule of thumb constant) x (depth) x (# of belts) = length of trace

2. Sections of fence: (length of trace)
(fence is estimated in 300m increments) = total # of sections

3. Short pickets: (# of sections) x (# of short pickets) = total # of short pickets

4. Long pickets: (# of sections) x (# of long pickets) = total # of long pickets

5. 400-meter reels: (# of sections) x (# of belts) = total reels of barbed wire

6. Man-hours to construct: (# of sections) x (# of man hours to construct) = total man hours to construct wire entanglement

NOTE IF AN EXPERIENCED CREW IS USED, YOU MUST MULTIPLY THE CONSTANT TIMES (.67). DURING NIGHT HOURS, YOU MUST MULTIPLY THE CONSTANT TIMES (1.5). SUBSTITUTE THAT NUMBER INSTEAD OF THE CONSTANT FOR MAN-HOURS. IF EXPERIENCED CREW AND AT NIGHT, YOU MUST MULTIPLY THE CONSTANT BY BOTH (.67) AND (1.5) TO GET THE CORRECT AMOUNT OF MAN HOURS TO CONSTRUCT THE WIRE ENTANGLEMENT. SUBSTITUTE THAT NUMBER INSTEAD OF THE CONSTANT FOR MAN-HOURS.

7. 5-ton truck loads: length of trace) x (Kilograms of materials per linear meter)
(5 ton truck) x (ton in pounds) x (1 pound converted into kilograms)
(1 pound = 0.4536 kilogram)

8. NON-NUCLEAR CRATERS

a. General. Craters are effective obstacles to enemy movement when constructed properly and located at critical points along his movement route. Craters are normally placed on roads or other high-speed movement routes the enemy is expected to use. They should be placed at locations that cannot be

easily bypassed such as cuts or fills. The basic purposes are to delay or stop the enemy, cause his forces to bunch up and provide good targets, and force him to use up breaching assets such as bridging and earth moving equipment. Use of antipersonnel and antitank mines in conjunction with craters creates formidable obstacles.

b. Placing. Craters should be placed in depth to prevent the enemy from conducting a single breach and continuing on. There are essentially two placement methods:

(1) Place craters adjacent to each other.

(2) Place craters 100 to 1,000 meters apart.

(a) Place craters adjacent to each other. This method makes the obstacle extremely difficult to breach by earth moving equipment and by a tracked-vehicle launched bridge. The loose soil will cause the bridge to rest uneven, and exiting vehicles will have no place to go, except into an adjoining crater. When using this method, care must be taken during the demolition process so that soil blown from one crater does not come to rest in adjacent craters, thus reducing their obstacle value.

(b) Place craters 100 to 1,000 meters apart. This method forces the enemy to conduct several breaches. The factors of METT-TSL will determine the best crater design and location. In any case, craters should be tied into existing or reinforcing obstacles and covered by direct fire weapons.

c. Designing. To be effective obstacles, craters must be too wide to be spanned by tracked vehicles, and too deep and steep-sided for any other vehicle to pass through them. Blasted road craters will not stop modern tanks indefinitely, because repeated attempts by the tank to traverse the crater will pull loose soil from the slopes of the crater into the bottom, reducing both crater depth and slope angles. Road craters must be large enough to tie into natural or man-made obstacles at each end. The effectiveness of craters may be improved by placing log hurdles on either side, digging the face nearly vertical on the friendly side, and mining the site with antitank and antipersonnel mines. Wire placed in the crater will add to the difficulty of mine clearing.

d. Hasty Road Craters

(1) Bore holes.

(a) Use a minimum of three bore holes.

(b) Dig all bore holes the same depth. The recommended depth is at least five feet.

(c) Space the holes five feet apart center-to-center across the road.

(d) Load the bore holes with ten pounds of explosive per foot of depth.

(e) Tamp all bore holes with suitable material.

(2) Effects.

(a) This method takes the least amount of time for construction, and produces the least effective barrier because of its depth and shape.

(b) The method described forms a V-shaped crater six to seven feet deep and 20 to 25 feet wide; extending approximately eight feet beyond each end bore hole. The sides have slopes of 25 to 35 degrees.

(c) Modern tanks require an average of four passes to cross hasty road craters.

(d) Craters formed by bore holes less than five feet deep and loaded with less than 50 pounds of explosives are useless against tanks.

(3) Formula for number of bore holes.

(a) $= \frac{[(L - 16)]}{5} + 1$

N = Number of bore holes required.
L = Length of desired crater.
16= 8 feet extended beyond each end hole.
5 = 5 feet spacing between holes.
1 = Constant (for end bore hole).

(b) Round up fractional numbers of holes to next higher number.

e. Deliberate Road Crater

(1) Bore holes.

(a) Use a minimum of three bore holes.

(b) Dig the bore holes five feet apart, center-to-center, in a line across the area of cut. Calculate the number of bore holes using the same formula as for hasty road craters (N = [(L -16/5] + 1).

(c) Dig the end bore holes seven feet deep, and the others alternately five feet and seven feet. Never place two five-foot holes next to each other. When the number of bore holes is even, place two adjacent seven foot holes near the middle of the line of bore holes.

(d) Place 80 pounds of explosive in the seven foot holes and 40 pounds of explosive in the five foot holes.

(2) Effects.

(a) The crater produced is V-shaped approximately 7 to 8 feet deep, 25 to 30 feet wide, with side slopes approximately 30 to 37 degrees.

(b) Modern tanks must make an average of eight passes to cross them.

f. Relieved Face Road Craters

(1) Bore holes.

(a) Two rows of bore holes are drilled. The rows are 8 feet apart. Space the rows 12 feet apart on hard surface roads.

(b) Space the bore holes on 7 foot centers.

(c) Use the following formula to compute the number of five foot deep bore holes for the friendly row (NF): NF = [(L -10)/7].

(d) Stagger the enemy side row bore holes in relationship to the friendly row. The enemy row will always contain one less bore hole than the friendly row. (NE = NF - 1).

(e) Bore holes on the friendly side are 5 feet deep, and loaded with 40 pounds of explosive. Enemy rows are 4 feet deep and loaded with 30 pounds of explosive.

(f) There should be a delay of detonation of ½ to 1½ seconds between the two rows. Detonate the row on the enemy side first. Fire the friendly row of charges while the earth from the enemy side is still in the air.

(2) Effects.

(a) This method produces a trapezoidal-shaped crater about 7 to 8 feet deep and 25 to 30 feet wide with unequal side slopes.

(b) The side nearest the enemy slopes down approximately 25 degrees from the road surface to the bottom. The friendly side slopes up at approximately 30 to 40 degrees from the bottom to the surface road.

9. ANTITANK DITCHES. Tank ditches are one way to degrade an attacking force's speed and mobility. They impede the advance by slowing vehicles and confusing the crews.

a. Employment. Tank ditches should complement existing obstacles to include:

(1) Slopes greater than 35 degrees.

(2) Steps over 1.5 meter high.

(3) Ravines, gullies, and ditches wider than 3 meters.

(4) Swamps and marshes over 1 meter deep.

(5) Forests having trees over 8 inches in diameter.

(6) Forests having 15 degree slopes and trees over 4 inches in diameter.

(7) Built-up areas.

(8) Construction of antitank ditches is time and equipment intensive. Maximum use should be made of the terrain. Also, the shortest antitank ditch or ditch system possible should be used.

(9) A tank ditch alone is not an adequate obstacle and will not stop a determined attacker. Additional procedures to increase ditch effectiveness are to:

(a) Locate the tank ditch within the optimum effective range of antitank weapons from covered and concealed firing positions.

(b) Pre-plan artillery and air strikes in antitank ditch area. Artillery and air strikes force the enemy to button up while attempting to breach the ditch, making him more vulnerable to direct fire weapons.

(c) Emplace antitank mines on both friendly and enemy sides of the ditch, especially in the loose soil material and the ditch bottom, to multiply effectiveness. Even the smallest ditch will strip mine plows and rollers from the front of the attacking force, thus making the enemy more vulnerable to mines on the friendly side of the tank ditch.

(d) Place concertina wire, water, or antipersonnel mines in the ditch to keep dismounted troops from working in the ditch and creating gaps by hand. The wire and water also improve the ditch's effectiveness against attacking tanks.

(e) Tie ends of tank ditches into existing obstacles such as steep slopes, wooded areas, and man-made structures. Ramps used in entering the ditch should be cut off and denied enemy access after completion of the ditch. This can be done with additional "dressing-up", using equipment or mine and wire obstacles. Mines should be used at the ends of the ditch to preclude being easily bypassed.

(10) When planning emplacement of tank ditches, keep this in mind: Threat commanders rely on carefully rehearsed tactical formations for control in the attack. You can disrupt the momentum of the attack and force directional changes in attacking vehicles, thus exposing their vulnerable flanks. This is done by imaginative placement of ditches with other obstacles. Tank ditches should be placed in a series or, if time is available, in a random pattern. Placing the ditch or ditches at 90 degree angles to enemy's avenue of approach may not always be the best tactical use. Consider the terrain and assets available, and construct ditches in a pattern that will confuse, present good targets, and force the enemy to use resources to breach.

b. Design. The configuration of the most effective tank ditch has been a subject of much discussion and field testing with such constraints as time and equipment available, and soil conditions. The most efficient ditch is either a **rectangular** or **triangular** ditch.

(1) Rectangular ditches.

(a) Construction.

1. A ditch 3.3 meters wide **cannot** be "bridged" by tanks alone.

2. A ditch 1.5 metered deep in consolidated, firm soil **cannot** be crossed by tanks or other vehicles without the aid of bridging or earth moving equipment.

3. A ditch 1.2 meters deep in firm soil should be considered "**expedient"** and capable of only a few minutes delay on the attacker.

4. Rectangular ditches in sand must be greater than 1.6 meters deep to be considered more than just an expedient ditch.

5. Rectangular ditches should have a 1 to 2 meter berm on their friendly side. This serves to increase the obstacle height, decrease traction to crossing tanks, greatly impede breaching with scissor-type bridges, and keep the enemy from pushing the soil back into the ditch without exposing their dozers or tanks with plows.

(b) Effect and results. The effectiveness of tank ditches is measured by the delay time imposed and targets presented. It is a function of soil type and condition, and ditch width and depth. The rectangular ditch has proven to be the most effective in imposing delays in both directions. Results of tests on crossing rectangular ditches in various soil types are shown below. The ditch must be wide enough to prevent the tank from simply running over it, and narrow enough to force the tank to expose itself to our defensive firepower. A 3.3 meter width (equivalent to a D7 dozer's blade) satisfies this criteria.

(2) Triangular ditches.

(a) Construction. Entrance slope is not critical in determining the effectiveness of triangular ditches.

1. Subjective estimates suggest "the steeper the wall the better."

2. A ditch 1.5 meters deep in hard clay soils cannot be breached tanks alone except under unusual conditions.

3. A ditch 1.2 meters deep in hard soil should be considered "expedient" and capable of imposing only a few minutes delay on the attacker.

4. Triangular ditches in sand must be greater than 1.8 meters deep to be considered more than just an expedient ditch.

5. To deny the use of the triangular tank ditch as a fighting position for the attacking armor, the spoil should be spread loosely on the enemy side rather than used as a berm. This will also reduce tank traction when approaching the ditch.

c. Equipment. Earth moving equipment such as the M9 Armored Combat Earth mover (ACE), dozers, scrapers, and bucket loaders can all be used for tank ditching. Generally, the equipment is much more effective if used in teams rather than alone. The M9s, dozers, and scrapers are most effective, while bucket loaders are used as a last resort. Various combinations can be used. Some typical team configurations could be:

(1) Two M9s or dozers.

(2) One M9 and two scoop loaders.

(3) Two or more scrapers used in tandem.

(4) One M9, dozer, and scraper used in tandem. (Generally, one M9 or dozer for two scrapers works best.)

(5) Scrapers only.

This list is not inclusive. Units should practice and experiment using various equipment and operator combinations to determine what works best for their area and what equipment is available. Frozen or extremely hard soil will most likely have to be ripped with dozer-mounted rippers prior to digging.

d. Methods. Following are four proven methods for tank ditch construction using organic engineer equipment.

(1) Two dozers or two M9s (ACEs) as a team. In step 1, vehicle #1 will start the ditch and push a load up to 9 to 10 meters (29 to 33 feet) from the start point, and then back up to start the cut again. In step 2, vehicle #2 will push the load away from the ditch to form a berm as vehicle #1 is backing up. The team continues performing in this manner to construct the ditch. This "T-push" method is suitable for construction of tank ditches in all soil types.

(2) One dozer and one scoop loader and grader as a team. This step is performed the same as the previous method except that the loader is used in place of vehicle #2. The grader is available to keep the berm straight and built up. After the ditch is constructed, and if time permits, the berm can then be further shaped. Normally, this method would be less productive than the first method. Again, more than one team may be used to construct the ditch.

(3) Scrapers in tandem as a team. Using scrapers in tandem as a team is an excellent method of tank ditch construction. Each loaded scraper travels the full length of the tank ditch and exits toward the friendly side of the ditch to spread the load and form the berm. A grader can also be used to shape and smooth the berm, which will reduce scraper-operator fatigue. "Bean bag" lights can assist during night operation to guide operators and particularly to mark the turn out point. This method may free other diggers such as M9s, dozers, and bucket loaders to perform other missions.

(4) Scraper and M9s or dozers in tandem as a team. This method uses scrapers as earth movers and generally requires a pusher (such as an M9 or dozer) to assist loading of the scrapers. As the pusher and scraper exit the ditch, the scraper will turn toward the friendly side to dump the load along the berm; the pusher will exit on the enemy side and proceed back to the beginning of the ditch to pick up another scraper. This method produces excellent results, but requires training to reduce idle equipment time spent waiting for a pusher or scraper.

(5) Operator training is an absolute must to attain maximum production. Experimenting with various equipment combinations and soil conditions is valuable

to determine the best production for a specific area of operations and given equipment availability.

e. Production Time. Basic production data of estimated construction times is shown for a 1.5 meter by 3.3 meter ditch using the teams indicated. The production rates are based upon field tests. No significant differences exist between construction of a triangular or a rectangular ditch. Valid test data does not exist for equipment combinations other than those listed.

f. Construction at Night. Tank ditching can be accomplished under blackout conditions. However, production will not be as great, and certain precautions need to be taken. Equipment operators need an object such as a "bean bag" light or flashlight with red lens to focus upon to assist in digging a straight ditch. Also, night vision devices, if available, are excellent for operators to use. Scraper operators particularly need to have a guide or light to lead them out of the ditch and prevent turning out early and overturning. Night operations will be a must in order to emplace the number of tank ditches that will probably be necessary. Commanders should recognize this fact and train under conditions of darkness.

g. Construction by Demolition. The utilization and effectiveness of explosives for tank ditching are still being studied. Considerable effort has been devoted to the subject. The concept of using liquid bulk explosive and buried pipes is currently being tested and evaluated. This concept has significant advantages; for example, the pipes are buried during peacetime and, when a tank ditch is required, the pipes are filled with explosive and detonated. The cratering methods described earlier can also be used to explosively create tank ditches. Some clearing and shaping of the ditch will normally be required to increase its effectiveness.

h. Construction Using Equipment and Explosives. When encountering hard soils or rocky ground to be excavated, rippers used to loosen and break the soil aid in excavation and are the most economical. Should the rippers be unable to loosen the material for excavation, "pre blasting", or the use of demolition's could be employed using shaped, cratering, line, or buried tamped explosive charges to break up the ground. This technique will shatter the material sufficiently to make excavation easier and thereby raising production rates. An advantage to be considered is that pre blasting allows less powerful pieces of equipment, like the scraper, to dig ditches out of previously hard material. Should the tactical situation dictate that dozers be used for other tasks, pre blasting may make it possible to excavate with scoop-loaders. With dozers, pre blasting may substantially increase production rates and decrease "downtime." Pre blasting will surely decrease wear and tear on machines and operators. For the combat engineer who has limited types and number of equipment, limited capability, and large number of tasks, equipment utilization in conjunction with pre blasting may turn an impossible tank ditch mission into merely a difficult one.

10. BRIDGE DEMOLITION'S

a. Streams and rivers are formidable obstacles to mobility. In most developed countries of the world, bridges have been constructed to span these waterways along lines of communication. Generally, roads and railroads also follow what would be likely military avenues of approach. The use of existing

bridges is critical to the mobility of a military force. Without existing bridges, forces must conduct river crossings using tactical bridging. A river crossing operation is one of the most difficult operations to perform successfully as it normally requires extensive time and resources.

b. By demolishing or rendering existing bridges unserviceable, we can force the enemy to use time and resources to conduct tactical river crossings. The vulnerability of the enemy is greatly increased during river crossings and presents a good opportunity to destroy his forces.

c. Bridge destruction cannot be accomplished haphazardly. There are several very important factors that must be considered and planned such as:

(1) Extent of destruction.

(2) When to demolish.

(3) Coordination.

(4) Resources.

(5) Effects on local population.

d. Extent of Destruction. Only that portion of the bridge essential to accomplish the military objective should be destroyed. In some instances where the span is short or the bridge has no intermediate support, destruction of the entire bridge may be required. In other instances where the bridge is large, dropping a single span may prevent enemy use, conserve demolitions, and make the bridge easier to reconstruct at a later date. Enemy capability must be a prime consideration in making this decision.

e. When to Demolish. The answer to this question is tactically dependent. If a bridge is blown too early, it may give the enemy time to change direction and therefore not impede his mobility at all. Waiting too long may enable the enemy to capture the bridge intact. The commander must make this tough decision only after considering the factors involved.

f. Coordination. The location of friendly forces and future plans of the command are prime factors. Coordination is required with higher, lower, and adjacent units, as well as other services in many cases. A worst case example would be for air assets to prematurely destroy a bridge that would be a major avenue of approach for a ground counterattack.

g. Resources. Major bridge destruction requires substantial amounts of time, personnel, and explosives. Planning and coordinating must occur early to ensure that resources are available and targets are executed at the proper time.

h. Effects on the Local Population. Unnecessary destruction of bridges has a major impact upon the local population. As with any other denial target, care should be taken to minimize the impact.

11. EXPEDIENT OBSTACLES. Expedient obstacles are basically created by using what nature has placed in the area. Imagination and ingenuity are the key factors in successfully constructing and employing expedient obstacles. The

possibilities for expedient obstacle creation are almost endless. A few of the more obvious are:

Abatis

Log obstacles (including hurdles, cribs and posts)

Rubble

Junked vehicles and battle damaged equipment

Flooding

Fires

a. Abatis

(1) An abatis is an effective obstacle against tanks and other vehicles in a heavily-wooded area with few roads or trails. An abatis can be constructed rapidly using demolition to fell trees. The trees should be felled at a 45 degree angle to the road or trail. The tree should remain attached to the stump to make the obstacle more effective and difficult to clear. Trees can also be felled with saws, axes or heavy equipment.

(2) To calculate the amount of explosive necessary for tree cutting, use the formula: D (diameter of the tree trunk, in inches) squared divided by 50, for a test shot. This formula is used to compute the amount of TNT required. The results of the test shot will determine if more or less explosive is necessary for subsequent shots.

(3) Place the charges at a height of 5 feet above the ground. The trees will fall toward the side where the explosive is placed. One side of the abatis should be blown, and the other side delayed, until the first row has fallen.

(4) If time allows mines, wire, and booby traps can be added to make clearing more difficult.

(5) Figure 3-18 (FM 5-34) provides you with a guide in planning an abatis.

b. Log Obstacles. There are many different types of log obstacles that can be constructed using local materials. Log obstacles are most effective when the lack of a bypass forces the enemy to breach them. Although they are time and labor intensive, and locations for their employment are limited, they do not require much logistic support. Log obstacles can be constructed entirely by hand. The availability of chain saws and bucket loaders or backhoes will significantly reduce construction time. Log obstacles can and should be used in conjunction with other obstacles to increase their stopping power.

(1) Log Hurdles.

(a) Log hurdles can be constructed using logs greater than 10 inches in diameter. The size of the logs will dictate if the hurdles should be constructed of single logs or multiple logs tied together. On level ground, log

hurdles will not stop tanks, but will cause them to slow down. Hurdles will improve the effectiveness of other obstacles by slowing enemy vehicles and making them more vulnerable to direct weapon fire.

(b) Log hurdles can stop tanks on uphill grades. The significant factor is determining how high to construct the hurdle. A field expedient method to determine the height of the hurdle is to use a stick about 12 feet long, stick the uphill end in the ground, and depress the stick until it is level. The distance between the downhill end of the sick and the ground is how high to construct the hurdle. The hurdle should be sited on the steepest part of the slope and as near to the top as possible.

(c) Figure 3-19 (FM 5-34) shows different types of log hurdles.

(2) Log Cribs.

(a) **Rectangular** or **triangular** log cribs are used effectively as roadblocks where standing timber is available, and where such an obstacle cannot be readily bypassed. Unless substantially built, obstacles of this type are not effective against heavy-tracked vehicles. Cribs are strengthened by filling them with earth. It is preferable to obtain the earth by digging a shallow ditch in front of the obstacle. Log hurdles in front of a log crib will force vehicles to reduce speed and add to the effectiveness of the roadblock.

(b) Figures 3-16 and 3-17 (FM 5-34) and table (3-52) (FM 5-34) can be used as a planning guide for constructing log cribs.

(3) Log Posts.

(a) Posts are among the best anti vehicular obstacles because each post presents breaching problems to the attacker. There are no fast methods of breaching a belt of posts. Normally, the attacker will try to bypass such an obstacle. Therefore, post obstacles should be placed where bypass requires much time and effort. Posts should be hardwood with a minimum diameter of 40 centimeters (15.8 inches).

(b) All posts are buried 1.5 meters (5 feet) in the ground, either vertically or at a slight angle toward the enemy, and project between 75 to 120 centimeters (30 to 48 inches) above ground level. The height should vary from post to post. The minimum acceptable density for posts is 200 per 100 meters (328 feet) of front. The spacing should be irregular, with at least 1 meter (3.3 feet), and not more than 2 meters (6.6 feet), between posts.

(c) The effect of post type obstacles can be improved, and the obstacles made more difficult to breach, by weaving spirals of barbed wire among the post. Mines can be used to make the obstacle more difficult to breach.

(d) Figure 3-20 (FM 5-34) can be used as a planning guide in constructing post obstacles.

c. Rubble. Rubble created as a result of combat in towns and villages can be used as obstacles in certain situations. Buildings can be intentionally rubbled by use of explosives. Mines added to the rubble will greatly prolong the clearing process.

d. Junked Vehicles and Battle-Damaged Equipment. When used to create road blocks, these items should be securely anchored to the ground if material and time permit. Using mines with the obstacle increases its effectiveness.

e. Flooding. Controlled flooding can be an effective expedient obstacle. Demolishing dams, canal walls, or levees can cause flooding to impede enemy movement.

f. Fires. Controlled burning of wooded areas, wooden bridges, and other areas is another expedient obstacle method to prevent enemy use. Both flooding and burning generally fall into the area of denial operations and will be closely controlled.

Expedient methods of obstacle creation are limited only by imagination and ingenuity. The ability to find something that works when there appears to be nothing available is a long-standing trait of a Marine.

REFERENCE(S):

FM 5-34	ENGINEER FIELD DATA
FM 5-102	COUNTER-MOBILITY
FM 5-103	SURVIVABILITY

UNITED STATES MARINE CORPS
COMBAT ENGINEER INSTRUCTION COMPANY
MARINE CORPS ENGINEER SCHOOL
PSC BOX 20069
CAMP LEJEUNE, NORTH CAROLINA 28542-0069

C-23G05
5 June 00
(95 POI)

STUDENT HANDOUT

HASTY PROTECTIVE MINE FIELDS

PURPOSE: The purpose of this period of instruction is to provide you with the knowledge and skills necessary to employ a hasty protective minefield.

TERMINAL LEARNING OBJECTIVE:

(1) Provided a temporary position, mission, personnel, compass, map, protractor, mines, FM 5-34 and FM 20-32, and DA Form 1355-1-R or suitable recording material, as a member of a team, lay a hasty protective minefield in accordance with FM 20-32. (1371.3.11)

ENABLING LEARNING OBJECTIVES:

(1) Without the aid of references, given a mission order, identify the information needed to lay / remove a hasty protective minefield in accordance with the following references, FM 5-34, FM 20-32, DA Form 1355-1-R. (1371.3.10a)

(2) Provided with an area and necessary equipment, emplace a Hasty Protective Minefield in accordance with FM 5-34, FM 20-32 and DA Form 1355-1-R. (1371.3.10b)

(3) Given a Minefield personnel and necessary equipment, and personnel remove a Hasty Protective Minefield in accordance with FM 5-34, FM 20-32, and DA Form 1355-1-R. (1371.3.10c)

OUTLINE

1. CHARACTERISTICS:

(1) Used as part of a unit's defensive perimeter.

(2) Used in temporary positions to protect forward and rear areas or in isolated locations. Examples: outposts, work sites, roadblocks, patrol bases.

(3) Located within small caliber weapon range, but beyond hand grenade range of defender's position.

(4) Normally laid on short notice.

(5) Must be covered by fire.

(6) Mine locations should cover likely avenues of approach and enhance key weapon systems and dead spaces.

2. MINES:

(1) Mines usually used are from unit's basic load.

(2) Type mines used:
(a) Metallic antitank and antipersonnel mines

(b) Do NOT use mines difficult to detect chemical mines. or anti handling devices

(c). If time permits mines should be buried to increase effectiveness, but
they may be laid on top of the ground in a random pattern.

(d). The employing unit upon leaving the area picks up all mines, unless enemy pressure prevents mine retrieval.

(e) Trip flares and improvised flares may be used in the field.

3. RULES:

(1) The Battalion Commander **can be** authorized to employ a hasty protective minefield. The Battalion Commander may delegate to a Company Commander.

(2) By STANAG 2036 (NATO), the row closest to the enemy is designated row A, while succeeding rows are B, C, D, and so on. Indicate the ends of a row by two markers. Label the markers with the letter of the row and the number 1 for right end of the row and 2 for the left end of the row. The marker could be a wooden stake, steel picket, etc.

(3) Mine rows containing Anti Tank mine rows will be, at a minimum, 8 meters apart.

(4) The distance of the first mine from the beginning row marker is the mine spacing to be used through out that row.

(5) To prevent sympathetic mine detonation, mines will be spaced at least 4 meters apart.

(6) NO **BACK AZIMUTHS WILL BE RECORDED ON THE 1355-1-R**.

(7) All measurements on the 1355-1-R will be in **Meters**.

4. MINEFIELD REPORTS

a. A minefield report is an oral, electronic, or written communication concerning mining activities, friendly or enemy.

b. The exact format of the report may be specified by the local command; if the format is not specified use the Report formats from FM 5-34 pg. 3-17.

Reports are submitted by the employing unit commander through operational channels to the operations officer (G3 / S3) of the authorizing headquarters.

c. Send the reports by the fastest, secure means available.

d. The following Reports are required for a hasty protective minefield:

(1) Report of Intention - This report serves as notification to a unit's higher headquarters that the unit intends to emplace a minefield. It includes data regarding the tactical purpose of the minefield, the estimated number and type mines to be employed, the location, and the proposed start and completion times.

(2) Report of Initiation - This is a mandatory report which informs higher headquarters that emplacement has begun and the area is no longer safe for friendly movement and maneuver.

(3) Report of Completion - The report of completion is usually an oral report to the authorizing commander that the minefield is complete and functional. The completed DA Form 1355-1-R (Hasty Protective Minefield Record) follows the report of completion as rapidly as possible

(4) Some additional reports are used when needed:

(a) Progress report

(b) Report of transfer

(c) Report of change

5. EMPLACE

a. The first step in employing a hasty protective minefield is to conduct a reconnaissance of the proposed minefield area.

b. After a reconnaissance, establish an easily identifiable reference point (RP) between the minefield and the unit's position. Mines should run in rows parallel to the unit's position and the RP. This procedure simplifies the recording and makes retrieval quicker and safer.

c. From the reference point, measure the magnetic azimuth in degrees and pace the distance to a point arbitrarily selected on the right side of the minefield. Call this point B-1 (if there are two rows). It will mark the beginning of the second row. Place a marker at B1 and record the azimuth and distance.

d. From B1 marker measure the magnetic azimuth in degrees and pace the distance to the point selected (towards the enemy) this point will be A1, the beginning of the first row of the minefield. Place a marker at A1 and record the azimuth and distance.

e. From the A1 marker face left and measure the magnetic azimuth in degrees and pace the distance to the point designated for the first mine in that row (this distance will be used as the spacing for that row). Place the mine on the

ground but do not arm it and record it with the appropriate number. Continue this process until all mines in that row are employed.

f. After the last mine in the row is employed, position the A2 marker on the left side of that row. The distance from the last mine to the A2 marker will be the same as the mine spacing for that row. record the magnetic azimuth and distance from the last mine to the A2 stake.

g. Move to the B1 marker and repeat step e. and f. for that row. The spacing on B row may be different from A row. The Mines will be numbered carrying over from the number given to the last mine in A row, i.e.. Last mine in row A is # 5; first mine in row B is # 6.

h. When the B2 marker is in you will need to measure the magnetic azimuth in degrees and pace the distance from the Reference Point to B2 and B2 to A2.

i. The last step is to tie the Reference point to a Landmark that can be found on a map, i.e.. Road junction, or a building. Record the magnetic azimuth and pace count from the Landmark to the Reference point.

j. Once all recording is completed the Mines will be armed starting with row A (closest to the Enemy) and working back towards the friendly position. Place all safeties 30 centimeters (1 foot) behind the row markers, RP or in an easily identifiable place. While the minefield is being armed the NCOIC will fill out the DA form 1355-1-R.

5. RECORD THE MINEFIELD

a. Determine Scale to be used

(1) To determine the scale, use the following formula:

Distance from RP to farthest point in the field + 10 paces

Example: 90 paces + 10 paces = 100 paces

(2) Add ten to the pace count as a safety margin to ensure that the minefield sketch is entirely contained within the largest ring.

(3) Convert the pace count to meters using the following formula:

100 paces x 0.75 = 75 meters

(4) Divide the meters by 4, there are four concentric rings on the form:

75 divided by 4 = 18.75 meters

(5) The distance between rings is 2 centimeters, therefore the scale used in the example is 2 cm = 18.75 meters.

(6) Always consider that the reference point is located at the center of the circles on DA Form 1355-1-R.

b. Azimuth Block

(1) Always point the magnetic north arrow towards the top of DA Form 1355-1-R.

(2) Indicate the direct of the enemy in relation to magnetic north.

c. Plotting

(1) When you Plot the distance and azimuth, the azimuth will be on the top of the line connecting the marks and the distance will be below the line.

(2) The stakes will be marked as a square and the mines will be marked as circles.

(3) For accuracy use a blank sheet of paper to help measure the distance. This is done by making tick marks the exact distance between two of the circles on the DA Form 1355-1-R, then fold the paper so that the lines match up and you will have a fold exactly in the middle of your two tick marks. Place another tick mark on this fold.

(4) Plot the azimuth and distance to stakes and mines in the order you employed the minefield.

(5) Plot the distance and azimuth from the landmark to the reference point.

d. Complete tabular and identification blocks.

(1) Tabular block.

(a) Covers all data on what is inside the actual minefield

(b) Has four columns used to identify what types of mines are contained in the field by Row, Nomenclature, Actuation, and the Number assigned during installation.

(c) In the remarks block you may put any specific information you deem necessary i.e.. “The row markers A1, A2, B1, B2 are orange tent pins flush with the ground.”

(2) Identification block.

(a) Notes all information concerning the Unit that employed the minefield and the information concerning marking and location of the minefield.

(b) Unit: Platoon, Company, and Battalion

(c) Reference Point: Brief description of what marks it i.e.. “Tree stump on the side of the road with engr. tape around it.” and the 8-digit grid coordinate of the reference point.

(d) Remarks: Used to put a brief description of the landmark and the 8-digit grid coordinate.

(e) Map and sheet No.: So Higher headquarters and interested units will be able to use the proper maps.

(f) Name of OIC: The name of the laying unit commander.

(g) Signature: Of laying unit commander.

(h) Time and Date: That the field was completed and armed

(i) Two other blocks are used for the signature of the OIC who removes the minefield and the signature of the OIC who accepts the minefield when it is transferred.

5. REMOVAL OF THE MINEFIELD

a. When a Unit retrieves the mines, start at the reference point and move to B1 (if two rows being used) using the azimuths and distances as recorded. Then move from B1 to the first mine of the B row. If B1 marker is destroyed, move from reference point to B2, using that azimuth and distance. You will have to shoot the back azimuth from B2 to last mine (add or subtract 180 degrees from the recorded azimuth).

b. Once removal is complete on the B row move to A1 and repeat the process.

c. After all mines are **removed** the Row stakes and reference point (if man made) will be removed.

REFERENCES:

1. FM 20-32 Mine/Countermine Operations

2. MCRP 3-17A/FM 5-34 Engineer Field Data

UNITED STATES MARINE CORPS
MARINE CORPS ENGINEER SCHOOL
COMBAT ENGINEER INSTRUCTION COMPANY
MARINE CORPS BASE
CAMP LEJEUNE, NORTH CAROLINA 28542-5040

C-23G07
5 June 00
(95 POI)

STUDENT HANDOUT

STANDARD PATTERN MINEFIELDS

1. PURPOSE: You as a Combat Engineer Squad Leader will be advising an Infantry Company Commander on all aspects of Combat Engineering and you will be called upon to employ minefields. This class will provide you with the knowledge and skills necessary to plan and emplace a Standard Pattern minefield.

2. LEARNING OBJECTIVES

a. TERMINAL LEARNING OBJECTIVE (S)

(1) Provided a compass, map, reconnaissance report, protractor, DA Form 1355, FM 5-34, and mission specifying desired density, minefield front in meters, and types of mines to be employed, as a member of a team, install a standard pattern Minefield in accordance with FM 20-32. (1371.3.13)

(2) Provided a standard pattern minefield, compass, map, protractor, and DA Form 1355, record the Minefield in accordance with FM 20-32. (1371.3.14)

b. ENABLING LEARNING OBJECTIVE(S)

(1)Given a compass, map, reconnaissance report, protractor, DA Form 1355, FM 5-34,
And mission specifying desired density, minefield front in meters, and types of mines to emplace, design a standard pattern minefield in accordance with FM 20-32. (1371.3.13a)

(2) Provided a blank Minefield requirements computation work sheet (FM 20-32, appendix B), and a Minefield construction mission specifying desired density, Minefield front and depth in meters, and percentage of anti-handling devices, estimate the materials required to install the minefield in accordance with FM 20-32. (1371.3.13b)

BODY

1. DEFINITION: Standard Pattern Minefields are Minefields laid out and employed according to a set of procedures.

a. Standard pattern installation facilitates clearing and recovering mines, simplifies planning and logistical computation, and ensures proper mine emplacement.

b. A standard pattern Minefield consists of a minimum of three regular strips and an irregular outer edge (IOE)

2. CHARACTERISTICS

a. Mine Cluster. A mine cluster is the basic unit of a standard pattern Minefield.

(1) A cluster is a 2-meter radius semicircle located three meters off the strip centerline.

(2) Live clusters contain as many as five mines only one of which can be an antitank mine.

(3) The base mine in a live cluster is the first mine laid three meters off the strip centerline.

(4) When a live cluster contains an antitank mine, this mine is always used as the base mine. If no antitank mine is present; the largest metallic antipersonnel mine is used as the base mine.

(5) The first cluster in a mine strip is located six meters from the end of a lettered strip and on the enemy side.

(6) The minimum distance between a cluster and a lane, gap, boundary, or another cluster is two meters measured from the edge of the cluster.

(7) The outer boundary of a cluster must be no closer than 15 meters to the Minefield perimeter fence.

(8) Clusters are always numbered beginning with the first cluster on the enemy side. Therefore, odd-numbered clusters are always on the enemy side of the strip, and even-numbered clusters are on the friendly side.

b. Omitted Clusters

(1) Omitted clusters contain no mines, but are numbered.

(2) Clusters are omitted within lanes or gaps, in areas less than two meters from boundaries, lanes, or another cluster, and in areas where terrain prohibits emplacement, such as trees or rocks.

c. Cluster Composition

(1) Cluster composition is the number of mines by type in any given cluster in a specified strip.

(2) Cluster composition is expressed in three numbers (Example 1-2-2)

(a) The first number represents antitank mines.

(b) The second number represents antipersonnel fragmentation mines.

(c) The third number represents antipersonnel blast mines.

(3) The number of mines in a cluster is specified in the strip cluster composition. The cluster composition remains the same throughout the entire mine strip.

(4) Different types of antipersonnel and antitank mines may be used in a cluster.

(5) Clusters are employed six meters apart in rows.

d. Mine Strips

(1) A mine strip consists of two parallel cluster rows offset three meters on either side of the strip centerline.

(2) There are two types of mine strips: regular and short strips.

e. Regular Strips

(1) A regular strip consists of a strip base line and two rows of clusters (row 1, enemy side, row 2, and friendly side.)

(2) Regular strips are marked and recorded per STANAG 2036. Letters (A, B, and so forth) designates them.

(3) Regular strips are sometimes referred to as "lettered" strips.

(4) A standard pattern Minefield contains a minimum of three regular strips.

(5) The minimum distance between strip base lines is 15 meters.

(6) A safety strip is used behind each lettered strip. The safety strip is eight meters from the base line (three meters from the outer edge of a cluster).

(7) Within a mine strip, the cluster composition must remain the same unless the cluster is omitted.

(8) Marking of end points indicates the direction of laying (for example, A1 to A2)

f. Irregular Outer Edge (IOE) - The IOE is the first part of the Minefield normally encountered by the enemy. It deceives the enemy as to the Minefield pattern, spacing and size.

(1) The IOE consists of a base line from which short strips are extended at turning points.

(2) The IOE is located on the enemy side of the Minefield.

(3) The number and length of short strips depends upon the tactical situation.

(4) Short strips originate only from turning points along the IOE base line.

(5) The first cluster along a short strip is placed on the enemy side and can be no closer than two meters from the IOE base line. If the short strip is exactly parallel to the enemy direction of travel, the NCOIC designates the enemy side of the strip.

(6) The IOE base line is labeled at the beginning (IOE 1) and end (IOE 2) according to the direction of laying.

(7) The short strips are labeled at turning points (I1) and at the end (I1E).

(8) The IOE contains a safe lane that is located two meters behind and follows the IOE base line.

(9) The IOE base line is no closer than 15 meters to any point (cluster boundary) on a regular strip.

(10) The IOE short strips are no closer than 15 meters to another IOE short strip.

(11) The number of clusters in the IOE is generally about one-third the numbered used in a regular strip.

h. Turning Points

(1) The last cluster before the turning point will be a minimum of three meters/paces from the turning point.

(2) The first cluster after the turning point will be laid on the opposite side of the strip base line from the last cluster, and three meters/paces from the last cluster turning point.

(3) The angle of any given turning point must not exceed 45 from the azimuth. This ensures that there will be a minimum of two meters/paces between clusters in the same row.

(4) There are no turning points in IOE short strips.

i. Lanes and Gaps

(1) **Lanes** are unmined or demined routes through a Minefield.

(a) Footpath is one meter wide

(b) One-way vehicle lane is eight meters wide

(c) Two-way vehicle lane is sixteen meters wide

(2) **Gaps** are unmined or demined routes through a Minefield. They must be a minimum of 100 meters, or more, wide.

j. Other Characteristics

(1) The farthest extremities of a regular (lettered) strip determine the Minefield front. The IOE is not considered in determining Minefield front.

(2) The Minefield can be laid left to right or right to left but consistency among strips is required.

(3) The Minefield will have two landmarks located to the rear of the Minefield (never extreme side or front).

(4) Landmarks can be up to 200 meters away from the last regular lettered strip, but must be in direct line of sight. If they are not in direct line of sight, intermediate markers are used and are placed 75 meters apart.

6. MINEFIELD CALCULATIONS

a. The minefield requirement computation form will provide the number of mines, by type, to order. The number of regular lettered strips to be employed. The number of antihandling devices (AHD's) to order, strip cluster composition, man hours required to install the minefield; the amount of fencing and marking material to order; number of truckloads required to carry the mines; and number of rolls of engineer tape to order.

b. Given Information - This information will normally be determined by the Engineer Company Commander of Staff Engineer.

(1) Desired Density (linear)

(a) This is the average number of mines that one would expect to encounter when walking along a straight, 1-meter path from the front to rear of the Minefield regardless of the depth.

(b) By convention, linear density is written as a three-digit figure, which specifies the number of antitank (AT) mines, antipersonnel fragmentation (APF) mines, and antipersonnel blast (APB), mines per meter of front.

(2) IOE representative cluster specifies mines, by type (AT, APF, & APB) for the IOE.

(3) Front - Overall front of Minefield in meters

(4) Depth - Overall depth of Minefield in meters

(5) Antihandling devices - Desired percent of antitank mines equipped with antihandling devices.

c. Part 1. Number of Mines

(1) Line A - Front 9 = IOE live clusters (round up)

Explanation: The regular strip has a cluster every three meters. The number of clusters in IOE is generally one-third a regular strip or one cluster every nine meters.

(2) Line B - IOE representative cluster x number of IOE live clusters = number of mines in IOE.

(3) Line C - The Minefield front multiplied by the desired density determines the number of mines in regular strips.

(4) Line D - Add subtotals Line B & C.

(5) Line E - Add 10% by multiplying subtotals by 1.10

EXPLANATION: Ten percent is added to the total to allow for damaged items and irregularities in terrain and strip length.

d. Part 2 - Number of Regular Lettered Strips

(1) Line A - Add desired density: AT + APF +APB = Total density of mines per meter of front

(2) Line B - Multiply 0.6 by Line A

EXPLANATION: Each regular mine strip has a cluster every three meters and therefore has a density of 1/3 cluster per meter of front. Clusters may contain a maximum of five mines, so five must divide the resulting figure. In short, to determine the minimum number of regular strips the total density must be multiplied by 3/5 (0.6), (three meters between clusters and five mines per cluster.

(3) Line C - 3 x AT desired density =

(4) Line D - Number of regular strip required = highest number of lines B or C

f. Part 4. Cluster Composition

(1) The cluster composition table is prepared by the OIC of the laying unit to control the allocation of mines to a regular strip.

(2) As mines are allocated by strip, it must be remembered that not more than one AT mine can be placed in each representative cluster and that each cluster may have a maximum of five mines.

(3) The desired density for each type mine is multiplied by three. Three is always used regardless of the minimum number of regular strips because it is the number of mine strips required to give a Minefield density of one mine per meter of front when a cluster contains only one mine of each type.

g. Part 5 - Number of man-hours to Install Minefield

Number of mines emplacement rate (mine per man-hour)

(1) The laying rate is the number of mines one Marine can emplace in an hour.

AT Mines: four mines per hour
APF Mines: eight mines per hour
APB Mines: sixteen mines per hour

(2) A 20% excess factor is included.

(3) The result is the total number of man-hours required for emplacement and represents straight work time only.

(4) When working under limited visibility or NBC conditions, the total man-hours (after the excess factor has been included) should be multiplied by 1.5.

h. Part 6 - Amount of fencing and marking material

(1) The formula for calculating a single strand barbed wire or single strand concertina fence is:

[(Front x 2) + (depth x 2) + 160] x 1.4

(2) The amount of wire for a double-strand barbed wire fence is calculated:

[(Front x 2) + (depth x 2) + 160] x 2.8

(3) The number of pickets required is equal to the total amount of fence divided by 15, if single strand barbed wire or concertina is used. You will divide by 30 if a double strand fence is used.

(4) The number of minefield marking signs is equal to the number of pickets.

i. Part 7 - Number of Truckloads

(1) The number of truckloads required will depend on the type and amount of mines as well as the type of trucks available.

(2) Page 3-26 in FM 5-34 gives details of number of cases of mines per truck type.

(3) The number of cases per truck is multiplied by the number of mines per case to determine the total number of mines per truck.

(4) The total of mines by type required is divided by the number of mines per truckloads required to transport mines.

j. Part 8 - Amount of Engineer Tape

(1) An extensive amount of engineer tape is used to mark the initial layout of a standard pattern Minefield.

(2) Engineer tape comes in 170-meter rolls and is used to mark boundaries, strips, IOE, lanes and gaps, and traffic lines.

(3) the total amounts of tape for each portion of the Minefield are added together and a 20% excess factor is included by multiplying the total by 1.2.

4. EMPLACEMENT PROCEDURES

a. Platoon Organization

(1) The platoon is the basic unit to install a standard pattern Minefield.

(2) Page 3-25 of FM 5-34 gives the recommended platoon personnel and equipment organization. The duties within this organization include:

Personnel	**Off**	**NCO**	**Troops**	**Equipment**
Supervisory Personnel	1	1		**Officer**: Map, Compass. Notebook & Minefield Record Forms **NCO**: Map, Notebook and Compass
Sitting Party		1	3	Stakes or Pickets, Sledge Hammers, Tracing Tape on Reels and Nails to Peg Tape
Marking Party		1	2	Barbed Wire on Reels, Marking Signs, Lane Signs, Wire Cutters, Gloves, Sledges, Pickets
Recording Party	1	2		Sketching Equipment, Lensatic Compass, Minefield Record Form, Map & Metric Tape
First Laying Party		1	6 to 8	Notebook for Squad Leader, Picks, Shovels and Sandbags
Second Laying Party		1	6 to 8	Same as First Party
Third Laying Party			6 to 8	Same as First Party
TOTAL	1	7	25 to 31	

(3) The siting party

(a) Places boundary stakes as strip markers at the beginning and end of each mine strip and turning point(s).

(b) Lays tape on the center lines of each strip, lane, and traffic path.

(4) The marking party - Erects fences and signs to mark Minefields boundaries and any lanes within the Minefield.

(5) The recording party

(a) Obtains necessary reference data, prepares DA form 1355, and installs intermediate markers when needed.

(b) All distances are recorded in meters, however, for hand laid mines along strips, pace measurement is permissible.

(6) The laying party - is responsible for installing, arming and camouflaging all mines on a strip or portion of a strip.

b. Minefield Emplacement Procedures

(1) The OIC arrives at site with the siting and marking parties, and goes to the rear boundary (either the right or left-hand boundary of the field). This is the farthest part of the Minefield from the direction of the enemy. The OIC indicates the starting point of the rear strip which, for a three-strip Minefield, is strip C, and the siting party drives a boundary stake to mark the location.

(2) The OIC then designates a starting point for the marking party at least 20 meters to the right of the boundary stake and indicates where the Minefield marking fence should be placed. The marking party immediately begins to install fence pickets, working in a counterclockwise direction. When all pickets are installed, the marking party encircles the field with a single strand of barbed wire followed by the second strand.

(3) From the boundary stake of strip C, the OIC moves in the direction of the enemy and establishes the starting point of strip B. Two members of the siting party drive a strip stake at the starting point of strip B, and the remaining two members begin to lay tape between the two stakes. This procedure is followed until the boundary stakes of the three lettered strips (C, B, and A) and the IOE on the right-hand side of the Minefield have been installed.

(4) At the boundary stake of the IOE, the OIC gives a sketch of the Minefield and instructions on siting the IOE base line and the regular mine strip centerlines to the siting party. The NCO and one other member of the siting party immediately begin setting stakes that indicate the base line of the IOE. The centerline laying team then lays the tape for the IOE baseline, leaving tape reels where tapes run out. Simultaneously, the short strips extending from the IOE base line are established. Each short strip ends with a stake that is designated as I1E, I2E, and so forth. Turning points are not used in the short strips of the IOE.

(5) On reaching the other boundary of the IOE, the NCO moves away from the enemy side, establishes the left boundary stake of strip A, stakes out this strip, and repeats the same procedure until all strip center lines are taped. All stakes are driven flush with the ground.

(6) While the IOE is being taped, the recording party begins obtaining reference data for the Minefield Record, starting from the landmark designated by the OIC and working behind the siting party. The amount of detail obtained by the recording party depends on the tactical classification of the Minefield and any special orders.

(7) As soon as the laying parties arrive at the site with mines, they establish mine dumps behind the field. The antitank mines are uncrated and stacked. Other types of mines are left in their crates with the crate lids removed. Fusses and detonators are placed in separate boxes; fuse types are not mixed.

(8) When the siting party completes the staking of centerlines, it installs lane tapes and traffic tapes, respectively. Traffic tapes are used by mine laying personnel to assist in camouflage, by reducing the amount of traffic on strip centerlines. Traffic tapes are laid approximately perpendicular to the Minefield trace at about 100-meter intervals. Tapes to mark safety lanes for tactical vehicles and patrols are also laid out.

c. Emplacement of Mines along a Minefield Strip

(1) The laying party must know the cluster composition of the strip and the location of any omitted clusters due to terrain features and future lane locations. When the center line tape for a regular strip has been installed, the NCOIC of the party designates all party members except for two as layers to emplace the mines in the ground. The remaining two Marines, usually the most experienced, are designated as pacers and are responsible for arming the mines. Layers pick up the maximum load of mines to be used as the base mines in the clusters. The pacers carry all fuses and detonators.

(2) The NCO then moves to the right or left boundary stake of the strip depending on which direction the Minefield will be installed and organizes the layers in two columns to the rear, six meters apart, and parallel to the strip center line. The NCO then measures six meters along the center line for the first cluster and, pointing perpendicular to the center line and in the direction of the enemy, indicates the placement of the base mine. The first layer on the enemy side places a mine on the ground three meters from the centerline.

(3) The NCO next measures three more meters and indicates the placement of the second base mine on the opposite (friendly) side of the strip. The first layer on that side then places a base mine on the ground. As the initial load of mines is laid, each layer returns to the nearest mine dump for another load. Fusers follow behind the layers and insert the mine fuses but do not arm the mines. This procedure is followed until the boundary stake on the friendly side of the Minefield is reached.

(4) Then the NCO tells the layers the number and types of mines to be placed next to the base mine in each cluster. As antipersonnel mines are being placed, the NCO proceeds along the strip, ensuring the proper number of antipersonnel mines are placed in each cluster. The NCO places a spool of trip wire next to mines that are to be trip wire actuated, and indicates which antitank mines are to be equipped with anti-handling devices by turning the mines upside down.

(5) When all mines are positioned in the clusters, layers draw shovels and return to the starting boundary markers. Each layer is assigned to dig holes for all mines in one cluster. The spoil from the holes is placed in sandbags and left beside the base mine at each cluster. Each layer checks the positioning of mines in the holes, but leaves the mines beside the holes, not in them. The layers also anchor any trip wires with nails or stakes, and wrap loose ends around fuses. When digging has progressed at least 25 meters from the starting point, the arming operation begins. Fusers arm all mines in a cluster, beginning with the mine farthest from the centerline and working back. The mines are placed in the holes, trip wires are attached, and the mines are armed and camouflaged. The filled sandbags are placed on the centerline of the strip opposite the base mine of the cluster. Fusers arming mines keep their feet

toward the centerline. Other personnel maintain a minimum distance of 25 meters from the fusers arming the mines.

g. Trip Wires and Anti-handling Devices

(1) No trip wires are used in the IOE.

(2) Trip wires may be used in regular strips, but only one mine per cluster may be trip wire actuated.

(3) Trip wires may be employed no closer than every third cluster.

(4) No more than two trip wires may be used on one mine.

(5) Trip wires can be used only on the enemy side (row).
(6) Trip wires are not considered anti-handling devices.

(7) Trip wires are not located closer than two meters to the border of a Minefield lane, cluster, another trip wire, IOE base line, or Minefield perimeter fence.

(8) Trip wires can only be used with antipersonnel, fragmentation mines.

(9) Anti-handling devices may be employed in tactical, point and interdiction standard pattern Minefields. They are not used in deliberate protective Minefields.

(6) When the cluster contains a mine to be equipped with an anti-handling device, the cluster is usually left unarmed until all clusters within 40 paces are armed and all personnel are a safe distance away. Mines located in lanes are not buried initially, but are placed off to the side to prevent confusion in counting cluster numbers. These mines may be buried later when the lane is closed. Upon completion of the arming operation, fusers give their safety clips to the NCO, who verifies that all mines have been fused and camouflaged. Upon verification, the NCO checks the strip and ensures that sandbags, tape, and debris is picked up. Upon completion of this task, the safety clips are turned over to the platoon sergeant who will buries them 30 centimeters to the rear of the end of the strip on the right boundary.

5. RECORDING

a. All conventional minefields are recorded on DA Form 1355 (Minefield Record), except for hasty protective minefields.

b. Preparing the Minefield record form is the responsibility of the laying unit. The OIC of the unit laying the mines must sign and forward the form to the next higher command as soon as possible.

c. Whenever any changes are made to an existing Minefield, a completely new record must be prepared on DA Form 1355. This record is marked REVISED and shows the Minefield as it is after the changes. Some changes that require a new record are:

(1) Relocation of mines in safe lanes.

(2) Relocation of safe lanes.

(3) Changed lane or Minefield markings.

(4) Inclusion of the Minefield into a larger Minefield system.

(5) Removal or detonation of mines.

(6) Addition of mines to the field.

d. DA Form 1355

(1) The DA Form 1355 contains blocks for tabular data and a graph consisting of 1-centimeter squares for a scaled sketch of the field.

(2) The recommended scale for plotting Minefields on the form is one centimeter = ten meters.

(3) Once information is entered on the form, the form is classified SECRET or NATO SECRET. When used for training, the record is marked SAMPLE.

(4) Enter complete data on authority for laying and on the laying unit. The OIC will include name, rank and SSN.

(5) Enter date time group (DTG) for starting and completion times. The RECORDER line will include name, rank and SSN.

(6) Enter copy and sheet number - Number of copies prepared will depend upon unit SOP and the classification of the Minefield. The number of sheets will depend upon the length and depth of Minefield. Large Minefields may have to be recorded on several sheets.

(7) Minefield Number

(a) Designation of unit authorizing installation

(b) Number of obstacles

(c) Status of obstacles: E = executed, P = proposed, U = under construction

(8) Enter map data as stated on map(s) used.

(9) LANDMARKS - Enter the grid coordinates and description of at least two landmarks.

(10) Enter description(s) of any intermediate markers used.

(a) When a landmark is more than 200 meters from the Minefield, or the strip reference stake cannot be seen from the landmark, an intermediate marker must be used.

(b) If possible, the intermediate marker should not be closer than 75 meters to the strip reference stake.

(c) Cross out any unused blocks.

(11) Enter the word STANDARD when the standard marking fence is used. Describe the boundary marking if other than standard marking fence is used.

(12) Enter the number of strips/rows laid other than the IOE. Describe the strip/row markers. Cross out words not applicable.

(13) Lanes

(a) Enter the width, marking and closing provisions for each lane.

(b) When appropriate, give the type and number of mines for closing.

(c) The location of those mines is described in the NOTES section.

(d) Cross out any unused blocks.

(14) Mines

(a) Enter type of Minefield by crossing out lines not needed.

(b) Indicate method of laying by crossing out incorrect descriptions.

(c) Enter type of mines as APB, APF, or AT.

(d) For each type of mine, enter number of mines and anti-handling devices installed in the IOE and in each strip.

(e) Enter totals.

(15) Notes - Enter under notes <u>at least</u> the following seven items and any additional information that would be useful in the removal of the Minefield.

(a) Mine clusters at 3 meters/paces spacing.

(b) Number of IOE live clusters (all other numbered 1 except omitted clusters).

(c) Numbered omitted clusters in regular strips.

(d) Clusters with antihandling devices (what type and where they are located on mine).

(e) Clusters with trip wire actuated AP mines.

(f) Strip cluster composition

(g) Location of safety clips/pins (distance and direction from landmark).

(16) Sketch

(a) Enter arrows for the direction of the enemy and magnetic NORTH. The enemy arrow will always point within the top 180 of the form; the NORTH arrow will follow one of the lines of the graph.

(b) Sketch will contain landmarks, strip marks, turning points, and Minefield marking fence. Each strip will be labeled (example: C1, B1, IOE1, etc.)

(c) A solid line will be drawn between landmarks strip markers and centerline of strips.

(d) The degrees and meters or paces will be indicated between each point. NOBACK AZIMUTHS WILL BE USED.

(e) Enter in the information block what was used if a compass was unavailable. Indicate system of measurement used. Add scale.

(f) The Marine preparing the sketch will sign the signature block.

1. MINEFIELD MARKING

a. Rear Area Minefields

(1) At the time of laying, a rear area Minefield must be completely fenced on all sides with two strands of barbed wire or concertina.

(2) To avoid indicating the exact boundary of the field, the fence does not follow the Minefield trace exactly.

(3) The fence is not less than 15 meters from the nearest mine.

(4) Minefield lanes in rear areas are fenced on both sides, and the fences are linked with the Minefield perimeter fence at entrances and exits.

(5) Lane entrances and exits, as well as the passage itself, are marked with signs to indicate the safe and dangerous sides, respectively.

(6) During times of darkness or poor visibility, lane markers are illuminated.

(7) In areas where English is not spoken, signs in the native language must also be erected.

(8) It may be necessary to post guards at lane entrances to prevent friendly personnel from entering dangerous areas.

b. Forward Area Minefields

(1) Minefields forward of positions along the forward line of troops (FLOT) are fenced only on the friendly (rear) side or on the friendly side and the flanks as necessary to protect friendly troops.

(2) Forward area Minefields may also be completely enclosed, and have part of the fencing removed before the enemy approaches.

(3) Lanes in forward areas are marked inconspicuously because use of standard methods would expose lane locations to the enemy.

(4) Suggested methods of lane marking include placing wire, tape, or closely spaced objects on the ground on each side of the lane, with lane entrance made easily identifiable by markers such as pickets wrapped with tape or piles of stone.

c. Marking Materials

(1) Barbed wire fences

(a) Top strand of barbed wire fence is waist high, lower strand about ankle high.

(b) Pickets should be spaced 10 to 50 meters apart, depending on terrain.

(c) Standard mine marking signs are spaced between pickets, and are hung on the upper strand with the words MINES facing away from the field.

(2) Concertina Wire

(a) Pickets should be spaced 10 to 50 meters apart, depending on terrain.

(b) Standard mine marking signs are hung on pickets.

d. Minefield Marking Sets - The standard Minefield marking set, currently used in the Marine Corps contains necessary components for marking a safe lane 400 meters through a Minefield. It also includes means of illumination for night marking.

7. STANDARD OBSTACLES

a. Standard obstacles are "packaged" obstacles whose design, material, and work effort have been predetermined.

b. They are used to make calculations easier.

c. On page 3-26 in FM 5-34 contains information on

(1) Standard obstacle MFJ (conventional mines).

(2) Standard obstacle MFK (conventional mines).

d. Both the MFJ and MFK are standard obstacle Minefields.

(1) Minefield is laid in standard pattern with an IOE.

(2) Minefield depth is 100 meters

(3) These standard obstacle Minefields are for the size and densities indicated.

REFERENCES:

MCRP 3-17A/FM5-34	Engineer Field Data
FM 20-32	Mine/ Countermeasures Operations

UNITED STATES MARINE CORPS
COMBAT ENGINEER INSTRUCTION COMPANY
MARINE CORPS ENGINEER SCHOOL
PSC BOX 20069
CAMP LEJEUNE, NORTH CAROLINA 28542-0069

C-23G09
6 June 00
(95 POI)

STUDENT HANDOUT

ROW MINEFIELDS

PURPOSE. The purpose of this period of instruction is to provide you with the knowledge to emplace a row minefield.

TERMINAL LEARNING OBJECTIVE(S):

1. Provided a compass, map, reconnaissance report, protractor, DA Form 1355, FM 5-34, and mission specifying desired density, mine field front in meters, and types of mines to be emplaced, as a member of a team, install a row minefield in accordance with FM 20-32. (1371.3.12)

ENABLING LEARNING OBJECTIVE(S)

1. Provided a compass, map, reconnaissance report, protractor, DA Form 1355, FM 5-34, and mission specifying desired density, mine field front in meters, and types of mines to be emplaced, design a row minefield in accordance with FM 20-32. (1371.3.12a)

2. Provided a blank mine field requirements computation work sheet (FM 20-32, Appendix B), and a mine field construction mission specifying desired density, mine field front and depth in meters, and percentage of antihandling devices, estimate the materials required to install the mine field in accordance with FM 20-32. (1371.3.12b)

3. Provided a completed row minefield, compass, map, protractor, and blank DA Form 1355, record the mine field in accordance with FM 20-32. (1371.3.12c)

OUTLINE

1. TYPES OF ROW MINEFIELDS. Row mining is the process of laying mines in rows as opposed to laying them in a standard or random pattern. The typical row minefield is composed of several rows of surface-laid mines set out at regular mine spacing. Row minefields are usually directed against a mechanized threat and are made up solely of AT mines. Antipersonnel mines can be added and either laid as separate rows or placed in clusters around the AT mines. Minefields composed entirely of AP mines are also used if the threat is a dismounted force. The specific compositions of row minefields vary depending on the situation and the capabilities of the laying unit. They range anywhere from very simple minefields, with only two or three rows of surface-laid mines, to much more complex ones, with buried mines, clusters of AP , AHDs, and IOEs.

a. Mine-Laying Vehicles. Typically row minefields are emplaced from a vehicle, thus speeding emplacement. Any of a variety of tactical and wheeled vehicles may be used for mine laying. Important considerations for selecting a vehicle include the vulnerability of the vehicle, its mine-carrying capacity, and its traffic ability in the minefield area.

b. Categories of Row Minefields: There are two special categories of row minefields: the deliberate row minefield (DRMF) and the hasty row minefield (HRMF). The HRMF is an on-call minefield (HRMF) under the control of the maneuver commander as an obstacle reserve.

(1) The DRMF is simply a procedural guide designed to simplify and standardize the planning, organization, and supervision of row-mining operations. Although it is rigidly structured, it remains more expeditious than the standard pattern minefield.

(2) The HRMF is executed on order, and usually done at the direction and under the direct control of the maneuver commander. It gives the maneuver commander the greatest flexibility by giving him a means to rapidly create obstacles when and where he needs them.

a. Hasty row mining is usually conducted from a vehicle such as an AAV or a 5 ton truck and is composed of surface-laid AT mines. Generally, an IOE is not employed and there is no change of direction in the rows.

c. Usage

(1) Row mining is not a new concept. It has been used since the beginning of modern warfare and has proven to be very effective, especially in support of maneuver-oriented doctrines, which require rapid mine-laying techniques.

(2) Row mining is faster then standard pattern mining because the mines are usually not buried and are often laid directly from a slowly moving vehicle.

d. Disadvantages. A major disadvantage of the row mining technique is the abbreviation of the procedures which simplifies the planning and execution of the traditional standard pattern minefield. These standard rules guidelines enhance safety and ease the supervision, command, and control of the minefield mission. Eliminating them to expedite the mine-laying process places a greater burden on the leader of the mine-laying party for planning, supervision, and control, and increases the risk to the laying party. Maintaining and removing mines in a row minefield is dangerous, even when the mines are surface laid.

e. Advantage. Although the row minefield is generally not as effective as a standard pattern minefield, the difference is often negligible under battlefield conditions. The advantage of row mining, in terms of speed, efficiency, and protection, make it a desirable option, especially in support of today's AirLand Battle doctrine.

NOTE: IF TIME AND RESOURCES ARE NOT CRITICAL, WHEN A VERY DENSE MINEFIELD IS REQUIRED (AS A BARRIER) OR WHEN THE MINEFIELD MUST BE MAINTAINED FOR A LONG PERIOD OF TIME, THE STANDARD PATTERN MINEFIELD IS STILL THE BEST CHOICE.

2. LAYING OF A ROW MINEFIELD. Generally, the rules governing the authority, reporting, recording, and marking are the same for the row minefield as in all other conventional minefields. In fact, row mining simply describes the method for laying the mines. Procedural guidelines governing specific minefield characteristics are few, leaving the laying unit greater flexibility in developing techniques and SOP's which meet their needs and desires.

THE MOST IMPORTANT FACTOR IN ROW MINING IS THE REQUIREMENT FOR STRICT SUPERVISION AND CONTROL.

a. Rules for Row Mining. Only a few rules govern the conduct of row mining. Most of these rules are contained in STANAG 2036. The following are the rules that apply to row mining:

(1) The minimum distance between rows of AT mines is 8 meters.

(2) The minimum distance between any rows and a row with AP mines is 15 meters.

(3) Clusters (the same as in standard pattern minefields) are placed on the row centerline directed toward enemy side.

(4) Cluster composition must remain the same throughout the row.

(5) The number of AP mines in each cluster must be the same.

(6) Different types of AP mines may be used in a cluster.

(7) The total number of mines in one cluster will not exceed five, with not more than one being an AT mine.

(8) The type of AT mine may vary from one cluster to another.

(9) AP mines can be laid in a 2-meter semicircle on the enemy side of the base mine in a cluster.

(10) The spacing between mines or clusters in a row can vary between 6 and 10 meters, but it will remain constant within the row.

(11) Mines and clusters will not be closer than 15 meters from the perimeter fence.

(12) Different AT mines may be laid within a row.

(13) The distance between a start row marker and the first mine in a row will be the mine spacing for that row.

(14) If the distance between a mine/cluster and any turning point is less than the mine spacing for that row, that mine/cluster will be omitted.

the next mine after a turning point is always located at the mine spacing selected for that row.

(15) All minefields will be recorded on a DA Form 1355, Minefield Record.

(16) Minefield marking, reporting, and approval authority are the same as with any other conventional minefield.

b. Planning Considerations

(1) Initial Planning. Initial planning is done in conjunction with the staff planning process. Obstacles, including minefields, are planned to support each course of action. the obstacles are designed to support the commander's intent and METT-T analysis. When the final plan which is selected, the engineer prepares his obstacle plan which includes the location of the minefield, its orientation, and its dimensions. The plan may include also the desired density and the intended effect on the enemy. The engineer should brief the maneuver commander on the relative effectiveness of the minefield using the minefield density. At this point logistics are coordinated, resources are allocated, and the mission is assigned to a unit for execution.

(2) Detailed Planning. Detailed planning and actual siting of each minefield is done by the engineer emplacing the minefield.

(3) Reconnaissance and Planning. The OIC of the laying party will need to reconnoiter the ground before siting the mine rows. He should prepare a detailed plan using a sketch of the area. maps, aerial photographs, and information from his reconnaissance. The plan should show the following:

a. All relevant ground detail such as slopes, ditches, roads, tracks, waterways, soil bearing conditions, weather effects on the area, and vegetation.

b. Direction of north and of the enemy.

c. The enemy's capabilities and equipment for overcoming the minefield.

The OIC coordinates with the commander of the unit which will be covering the obstacle to ensure that the minefield fits within his plan for the defense. He ensures that the actual siting of the minefield supports the defensive concept, and is in the optimum location and orientation. With the maneuver commander, he makes whatever adjustments are necessary. He then identifies the exact location of:

` d Boundary fences.

e Mine rows and row markers.

f Landmarks and intermediate markers.

g Construction routes, gaps, and lanes.

h Mine dumps and resupply routes.

i Control and rally points.

j Routes for fencing party.

k Location of IOEs (if required).

c. Organization. The labor involved in row mining is relatively easy for trained personnel, but the organization of the task as a whole is intricate, placing great demands on the leader. Without the guidelines to follow as in the standard pattern, and because each situation is different, nothing must be left to chance in the planning and execution. Allowances must be made for the transportation, handling, and control of the considerable tonnage of mines required. The officer and the squad leaders must be able to exercise control throughout the task, under all conditions including nighttime. Safety must be observed at all times.

d. Minefield Layout. The layout is the first step in the actual mine-laying process, and entails the physical establishment of the minefield's landmarks and other control features. The purpose of the layout is for safety and control, and should be conducted under favorable conditions, usually in daylight.

(1) Layout consists of identifying the landmarks; establishing the initial construction routes; and emplacing the start and end row markers, intermediate row markers, and fence location.

(2) The following points should be observed in addition to the standard procedure for siting mine rows:

(a) The layout party starts well in advance of the actual laying. The leader of the emplacing unit will usually direct the layout party with two or three Marines or his subordinate leaders to assist. Usually a single vehicle is employed to assist in the carrying of layout equipment to reduce the amount of traffic in the minefield location.

(b) The layout party sets out all control markers and temporary directional markers for night or day.

(c) The use of sharp turns must be avoided. The distance between intermediate markers in a row should not exceed 100 meters, and is terrain dependent.

(d) Start, change of direction, and end row markers are all the same, and are driven flush (or exposed 1 to 2 inches above the ground). These markers must be used as they are required for the recovery of the minefield.

(e) Safety tapes and any required minefield gaps or lanes should be marked early in the layout.

(f) Mark the routes for mine-laying vehicles to and from the rows.

In order to speed the layout of large minefields, the layout party may proceed from landmark 1 to A1 to B2 to B1 to C1 and so on until they reach landmark 2.

e. Siting Mine Rows. Rows should be laid to reinforce the terrain. Certain features like thick woods and deep wide streams are natural obstacles. The mine rows should be laid to reinforce these obstacles and increase the effectiveness of the minefield. the distance between rows will be decided by the following factors:

(1) The depth and density of the minefield.

(2) The terrain.

(3) The suitability of the ground for use by the mine-laying vehicle.

Mine rows are always labeled with a letter. Row A is the mine row nearest to the enemy, followed by rows B, C, D, E, and so forth. When vehicles work as teams; two, three, or four rows can be laid simultaneously. This is referred to a PANEL. Several Panels may be laid together to give the desired depth, width, and density to the minefield.

f. Mine Row. The mine row forms the basic element of a minefield. An AT mine row may be laid with all pressure or with part pressure and tilt rod to increase probable kill or increase coverage of anticipated enemy breach areas. The mine row can be all pressure actuated and then be upgraded to tilt rod and buried, if so desired. Antihandling devices can be installed during the emplacement of the minefield, or after the minefield has been installed as long as no AP mines have been laid. Tilt-rod activated mines increase the effectiveness of the minefield and decrease the number of mines required to achieve the desired result.

g. Mine Spacing. The OIC of the minefield is responsible for determining the mine spacing. The desired density, the availability of laying vehicles, the number of rows, and the possibility of sympathetic detonation (see TM 9-1345-203-12&P) affect the distance between mines. When M21 mines with tilt-rod extensions are surface laid, they must be staked to the ground to prevent the mine from tipping over. The M21 mine is staked on the enemy side using 6-inch nails or steel rods driven through the carrying lugs of the mine.

h. Irregular Outer Edge. A row minefield may contain an IOE designed to deceive the enemy as to the pattern and the extent of the minefield. This may cause the enemy to begin breaching early, using more of his engineer assets and multiplying the effectiveness of the minefield. An IOE consists of short rows and can be laid by hand or vehicle. It may contain AT mines, AP mines, or mixed clusters. An IOE will require extra time, manpower, and supplies.

i. Control Measures. Row mining control measures are essential to the mine-laying vehicles due to the complexity of the indicators. The basic commands which may be required are as follows:

(1) Start laying.

(2) Intermediate markers.

(3) Change of direction.

(4) Warning markers (used to alert the vehicle driver that a change of dir

(5) Stop laying.

(6) End of row.

Some are materials which may be used to construct control measures are:

(7) U-shaped pickets.

(8) HEMMS poles.

(9) Wooden posts.

(10) Steel rods.

Control measures for night laying require lights or infrared equipment such as the following:

(11) Cyalume sticks placed in the U-shape of the picket.

(12) Directional flashlights taped in the U-shape of the picket.

(13) HEMMS lights used with either U-shaped pickets or poles.

(14) BETA lights, if available.

(15) Lights from minefield marking set #2.

(16) Curb lights from a Medium Girder Bridge Set.

(17) Infrared reflectors.

j. Marking. Marking of row minefields is the same as all conventional minefields. In principle, all areas in friendly territories containing mines will be marked by signs and, if possible, be fenced.

3. ROW MINEFIELD RECORDING. All Conventional minefields are recorded on DA FORM 1355, except for hasty protective minefields, which are recorded on DA FORM 1355-1-R. Row minefields are recorded the same as standard pattern minefields, except that Hasty row will be written on the top portion of Block 1 with minimum information included. The note section will include:

a. Mine clusters at 6 pace spacing.

b. All distance in minefields are measured in paces.

c. Height of the pacer.

d. Mines with AHD- IOE, A, B, C, E, etc.

e. Clips and safeties buried 30 cm rear of end row markers.

4. ROW MINING LOGISTICAL CALCULATIONS. The following is a method of determining the number of AT mines required for a row minefield.

Step 1. Determine the number of AT mines required. Multiply the given desired density by the minefield frontage.

Density x Frontage = Number of AT mines

Step 2. Determine the number of AT mines per row. Divide the minefield frontage by the desired spacing interval between mines.

NOTE: The resulting number is rounded down to the nearest whole number.

Frontage / Mine spacing = Number of Mines per Row

Step 3. Determine the number of rows. Divide the number of AT mines by the number of mines per row.

NOTE: The resulting number is rounded up to the nearest whole number.

Number of AT mines / Number of Mines per Row = Number of Rows

Step 4. Determine the actual number of AT mines. Multiply the number of AT mines per row by the number of rows.

Number of Mines per Row x Number of Rows = Actual Number of AT mines

Step 5. Determine the number of AT mines to request.
Multiply the actual number of AT mines by the 10% factor for waste.

NOTE: The resulting number is rounded up to the nearest whole number.

Actual Number of AT Mines x Waste Factor = AT Mines to Request

Step 6. Determine the number of vehicle loads by using the same procedure as with the Standard Pattern Minefield.

Step 7. To determine the amount of fencing and marking materials required use the procedure as with the Standard Minefield.

SAMPLE PROBLEM #1

Your platoon has been tasked to emplace a 400-meter row minefield with a density of 0.5-0-0. You have decided to space the mines 6 meters apart and your rows will be 15m apart. Determine the number of M15 mines to order, and the number of 5-ton dump trucks required to deliver the crated mines.

Step 1. Density x Frontage = Number of Mines

0.5 mines/meter x 400 meters = _____ mines

Step 2. Frontage / Mine Spacing = Number of Mines per Row

400 meters / 6 meters between mines = _____ mines per row

Step 3. Number of AT Mines/ Number of Mines per Row = Number of Rows

200 mines / 66 mines per row = _____ rows

Step 4. Number of Mines per Rows x Number of Rows = Actual Number of Mines

66 mines per row x 4 rows = _____ mines

Step 5. Actual Number of Mines x Waste Factor = Mines to Request

264 mines x 1.10 = _____ mines to request

Step 6. Mines Requested / Crated M15's per 5 Ton Dump = Number of Trucks
(see FM 5-34, page 3-26)

291 mines / 204 mines per truck = _____ trucks

Step 7. Barbed Wire = [(Front x 4) + (Depth x 4) + 320] x 1.4

[(Front____m x 4) + (Depth___m x 4) + 320] x 1.4 =_____m

Number of Pickets = Amount of Barbed Wire / 30

_____m of barbed wire / 30 =

Step 8. Amount of Engineer Tape

a. Minefield Boundaries. Depth x 2
___m x 2 =

b. Regular Rows. Front x Number of Rows
____m x 4 =_____m

c. IOE. Front + (Length of IOE Shortstrip X number of IOE Shortstrip) = NONE

d. Lanes and Gaps. Depth x 2 x Number of Lanes and Gaps.

___m x 2 x 2 lanes =____m

e. Traffic Lines. Depth x Number of Traffic Lines

60m x 2 =____m

f. Subtotal (add line A+B+C+D+E) = meters (round up)

____m+____+_+___+___= ____m

g. Number of Rolls to Order. Line F x 1.2 = meters

_____m x 1.2 =_____m

2496 meters / 170 meters per roll =_____ rolls

STUDENT REFERENCE:

FM 20-32

UNITED STATES MARINE CORPS
COMBAT ENGINEER INSTRUCTION COMPANY
MARINE CORPS ENGINEER SCHOOL
PSC BOX 20069
CAMP LEJEUNE, NORTH CAROLINA 28542-0069

C-23H01
6 June 00
(95 POI)

STUDENT HANDOUT

M58 LINEAR DEMOLITION CHARGE

PURPOSE: The purpose of this period of instruction is to familiarize you with M58 Linear Demolition Charge also named MARK 2 MOD O Mine Clearing System.

TERMINAL LEARNING OBJECTIVE (S):

1. Provided a mission, an inert linear demolition charge, a rocket, an MK155 Trailer mounted launcher, and an area in which to fire the charge, as a member of a team, employ the charge in accordance with TM-9-1375-215-14 (1371.2.23).

OUTLINE

1. CHARACTERISTICS OF THE M58

a. SYSTEM DESCRIPTION: The MK2 Mine Clearing System is a trailer-mounted, rocket-towed linear demolition charge. It is used to provide a clear path for combat vehicles during minefield-breaching operations.

b. MAJOR COMPONENTS:

(1) H. E. LINEAR DEMOLITION CHARGE: The Linear Demolition Charge M58A4 contains 1750 pounds (5 lbs per foot) of composition C-4. The linear charge is 350 feet long and consist of a 3/4 inch nylon rope core and two strands of detonating cord passing through the C-4 blocks. The linear demolition charge has three (3) 100 foot sections and one (1) 50 foot section connected together with clamps that act as boosters (PETN FILLED). It is attached to a 205 foot arresting cable.

(2) ROCKET MOTOR: The MK22, Mod 3 or 4, five inch rocket motor is designed to propel the linear charge over the target minefield.

(3) MINE CLEARING LAUNCHERS: The MK155 is a welded framework that holds the packaged linear charge and has a hydraulically elevated launcher rail for the towing rocket. The launcher holds the linear charge and the rocket motor securely during transport to the target minefield.

(4) TRAILER CHASSIS: The trailer chassis is general purpose 3 1/2 ton trailer which holds the mine clearing launcher and transports launcher to target minefield.

c. CAPABILITIES AND FEATURES: The M58A4 is capable of clearing a path 16 meters wide and 90 meters long through a minefield. Minefields planted with single-impulse, pressure type, antitank mines, and/or mechanically actuated antipersonnel mines can be cleared with the use of the M58A4 linear charge.

(1) The system is designed for towing over rough terrain.

(2) The system is deployable in various types of climates.

(3) The rocket motor and linear charge can be remotely initiated.

(4) Launcher and trailer are fully reusable and can be reloaded with a new rocket motor and linear charge in 30 minutes.

2. SL-3 COMPONENTS

a. CABLE ASSEMBLY SWITCH: The cable assembly switch primarily consists of the switch housing, and two cables. The cable assembly switch determines power flow to the rocket motor or linear charge through 75 feet of electrical cables. The housing on the electrical cable switch is water tight. The other cable on the cable switch has two electrical leads emerging from it that are used to connect the M34 blasting machine or M51 test set.

b. M51 TEST SET: The M51 Test Set is used to test the circuit on the entire electrical system.

c. M34 BLASTING MACHINES: The M34 Blasting Machine is used to send enough power through the system to propel the rocket and to detonate the main charge.

d. LIFTING SLING: It is used to load/unload the linear charge container and launcher.

e. PROTECTIVE NYLON COVER: The protective nylon cover is used to cover the linear charge container after the hard cover has been removed.

f. TURNBUCKLES AND U-BOLTS: U-Bolts secure launcher to the chassis, turnbuckles secure the linear charge container to the trailer chassis.

g. INSTRUCTION CARDS: These cards give minimum instructions required to operate the system.

3. DESCRIPTION AND USE OF OPERATOR'S CONTROLS AND INDICATORS

a. HYDRAULIC SYSTEM CONTROLS AND INDICATORS: The Hydraulic System is located near the rear of the launcher. It is used to raise and lower the launcher rail.

(1) HAND PUMP: The hand pump is used to pressurize the accumulator or for pumping hydraulic fluid to activate the cylinder and raise the rail.

(2) ACCUMULATOR: The accumulator is used to store hydraulic pressure needed to raise launcher rail when hydraulic control valve handle is in REMOTE RAISE position.

(3) PRESSURE GAGE: The pressure gage indicates accumulator hydraulic pressure.

(4) HAND PUMP RELEASE VALVE: When the hand pump release valve is closed, or in the HOLD position, it allows the hand pump to deliver hydraulic fluid. When open, or in the RELEASE position, it causes fluid to flow back into the reservoir, and releasing pressure.

(5) HYDRAULIC CONTROL VALVE HANDLE: The hydraulic control valve handle directs flow of fluid in manual position, pressure accumulator position and in remote raise position.

b. SAFETY SWITCH ASSEMBLY: The safety switch assembly prevents the rocket motor and linear charge from firing when the launcher rail is not elevated to firing position.

(1) SAFETY SWITCH ELECTRICAL LEAD CONNECTOR: The safety switch electrical lead connector, connects to receptacle No. 1 on the linear demolition charge container during operation.

(2) ROLLER-LEVER SWITCH: The roller-lever switch completes the circuit to the rocket as launcher rail approaches 47 degrees.

(3) SAFETY SWITCH PLUG CONNECTOR: The safety switch plug connector is the plug connector for the 75-foot special purpose electrical cable.

c. CLINOMETER: The clinometer indicates the degree of angle the launcher rail is raised. Launcher must be level for the clinometer to be accurate.

d. LAUNCHER RAIL AND SUPPORT: The launcher rail and support provides a mobile platform for the M58A4 linear charge.

(1) FRONT AND REAR HAND KNOBS: The front and rear hand knobs exert pressure on the rocket bands to hold the rocket laterally.

(2) ALIGNMENT PINS: The alignment pins align the rocket on the launcher rail.

(3) ROCKET RELEASE MECHANISM: The rocket release mechanism restrains the rocket on the launcher rail during transport. It is located at the rear of the launching rail.

(4) DETENT ASSEMBLIES: The detent assemblies prevent the launcher rail from lowering when detent assemblies are engaged. When disengaged, detents allow launcher rail to lower.

(5) BALL LOCK PINS: The ball lock pins lock the launcher rail at different elevations when they are in the front lock position, the ball lock pins prevent the launcher rail from raising above 47 degrees.

(6) LAUNCH POSITION INDICATOR: A white mark on the launch rail supports which indicates to the crew that launcher rail is at desired launch angle. If a vertical white mark appears below the horizontal white mark (T-stripe), the launcher angle is too high for proper deployment of rocket.

4. LINEAR CHARGE OPERATING INSTRUCTIONS:

a. INITIAL INSPECTION/PRE-FIRING INSPECTION

(1) Insure all components are present and undamaged.

(2) Insure all hydraulic system components are secured to launcher.

(3) Check the pump, accumulator, valve, cylinder, and hose for leaks.

(4) Check the fluid level in the hand pump by removing the fill plug and dipstick and visually checking the fluid level on the dipstick. (Insure that launch rail is in stowed position and accumulator uncharged when fluid level check is performed.) Should level be deficient, fill to "FULL" mark on the dipstick with MIL-H-5606 hydraulic fluid and replace the dipstick/fill plug.

b. OPERATIONAL CHECK OF LAUNCHER

(1) Insure launcher is place on level ground.

(2) Set detents to ENGAGED (down) position.

(3) Set hydraulic control valve handle to MANUAL RAISE/LOWER position.

(4) Rotate pump valve handle to HOLD position.

(5) Remove ball lock safety pins from LOCK position. (If pins are hard to move, slowly actuate hand pump while simultaneously attempting to remove pins.)

(6) Operate the hand pump handle and raise the launch rail to approximately 60 degrees.

(7) Set detents to DISENGAGED (up) position.

(8) Rotate pump valve handle to RELEASE position and allow the launch rail to return to the down (0 degree) position.

(9) Set detents to ENGAGED (down) position.

(10) Insert ball-lock safety pins in LOCK position.

(11) Set hydraulic control valve handle to PRESSURIZE ACCUMULATOR position.

(12) Rotate pump valve handle to HOLD position.

(13) Disengage ball-lock pin on hydraulic pressure gauge cover and rotate cover aside.

(14) Actuate hand pump handle until the hydraulic pressure gauge indicates 3200 to 3500 PSI.

(15) Rotate gauge cover over pressure gauge and install ball-lock pin.

(16) Relocate ball-lock safety pins from lock to RAISE position.

(17) Pull lanyard (attached to the hydraulic control valve handle) to move hydraulic control valve handle from PRESSURIZE ACCUMULATOR TO REMOTE RAISE position. Visually monitor clinometer to insure an approximate elevation of 47 degrees is achieved.

(18) Sets detents to DISENGAGED (up) position.

(19) Move hydraulic control valve handle to MANUAL RAISE/LOWER position.

(20) Rotate pump valve handle to RELEASE position.

(21) Set detents to ENGAGED (down) position when launch rail has lowered to 0 degrees.

(22) Relocate ball-lock safety pins from RAISE to LOCK position.

c. INSTALLING LAUNCHER ON M353 TRAILER CHASSIS

(1) Set hydraulic control valve handle to the MANUAL RAISE/LOWER position.

(2) Rotate the pump valve handle to the HOLD position.

(3) Operate the hand pump handle and raise the launch rail to an elevation adequate to install the lifting sling.

NOTE: A LIFTING SLING IS SUPPLIED AS SUPPORT EQUIPMENT

(4) Adjust the bar of lifting sling with its long axis parallel to long axis of the launcher.

(5) Attach the four snap hooks of lifting sling cables into lifting rings located on each side of launcher. Make sure there is no twisting or binding of the cables.

(6) If forklift is used, forks should be adjusted to fit under the lifting sling bar inside cable attaching points. If crane is used, attach crane hook through center hold of lifting sling bar.

(7) Lift launcher above trailer with rail opening toward front of trailer.

CAUTION: DO NOT ATTEMPT TO LOAD LAUNCHER FROM FRONT OR BACK OF TRAILER. LOADING WILL BE ACCOMPLISHED FROM PORT OR STARBOARD SIDE.

(8) Slowly lower launcher and align rear of kit flush with rear of trailer. When lowered, the bottom of launcher supports will rest on the trailer's bolsters.

(9) The two rear skid-blocks on launcher should rest to the rear of the trailer's rear bolster. The bolster has holes for securing U-bolts.

(10) The two front skid blocks on bottom of launcher should rest forward of the trailer's front bolster. The bolster has holes for securing U-bolts.

NOTE: WHEN SECURING U-BOLTS THE THREADED END SHOULD CONTAIN A FLAT WASHER, LOCK WASHER AND HEX NUT BELOW THE BOLSTER.

d. INSTALLING CHARGE PALLET ON TRAILER-MOUNTED LAUNCHER

(1) Operate the hand pump handle and raise the launch rail to a maximum elevation or to first tread on hydraulic rail.

(2) Remove the lifting sling from the launcher and adjust bar of lifting sling with its long axis parallel to long axis of charge pallet.

(3) Attach the four snap hooks of the sling cables into lifting rings located on each side of charge pallet. Make sure cables do not twist or bind.

(4) If forklift is used, forks should be adjusted to fit under the lifting sling bar inside cable attach points. If crane is used, attach crane hook through the center hole of the lifting cling bar.

CAUTION: INSURE THAT FORKLIFT OR CRANE IS CAPABLE OF LIFTING APPROXIMATELY 3100 POUNDS. INSURE THAT FORKS OF FORKLIFT ARE LONG ENOUGH TO ACCOMPLISH INSTALLATION.

CAUTION: CHARGE PALLET MUST BE LOADED FROM EITHER PORT OR STARBOARD SIDE. PALLET MUST BE PREVENTED FROM SWAYING, TO AVOID POSSIBLE DAMAGE OF LAUNCHER COMPONENTS.

CAUTION: NEVER ATTEMPT TO LOAD CHARGE PALLET AND LAUNCHER TOGETHER ONTO THE TRAILER.

(5) Using forklift or crane, slowly lift and align charge pallet with the electrical end toward rear of trailer.

(6) Lower charge pallet slowly while guiding charge pallet skids onto launcher. Charge pallet lifting bar guides should rest between the cross members of the launcher supports.

(7) Remove lifting sling from charge pallet lifting rings and stow in storage container.

NOTE: FOUR TURNBUCKLES ARE SUPPLIED AS SUPPORT EQUIPMENT AND SHOULD BE REMOVED FROM THE STORAGE CONTAINER AT THIS TIME.

(8) Hook longest turnbuckles to left and right rear pad eyes of M353 trailer.

(9) Hook shortest turnbuckles to left and right forward pad eyes of M353 trailer.

(10) Attach opposite end of each turnbuckle to the charge pallet lifting rings and tighten to secure charge pallet to M353 trailer. Ensure turnbuckle hooks are facing inbound.

(11) Set detents to DISENGAGED (up) position.

(12) Rotate pump valve handle to RELEASE position, and allow rail to return to the O degree position.

(13) Set detents to ENGAGED (down) position.

(14) Insert ball-lock safety pins in LOCK position.

5. ELECTRICAL CIRCUIT CONTINUITY CHECK

Step 1: Remove cable assembly switch from the front container, check the firing box for damage, any fray on the wires and cleanliness of the receptacle. Also ensure you have on hand the M51 Test Set and the M34 Blasting Machine and also check them for serviceability.

Step 2: Set hydraulic control valve handle to MANUAL RAISE/LOWER position.

Step 3: Rotate pump valve handle to HOLD position.

Step 4: Remove ball-lock safety pins from LOCK position.

Step 5: Using hydraulic hand pump, raise launch rail enough to allow removal of pallet hard cover.

Step 6: Remove charge pallet hard cover.

Step 7: Place all components of the firing system near the rear of the charge pallet.

Step 8: Separate the two connectors of launcher safety switch electrical assembly.

Step 9: At the rear of the charge pallet, remove the shorting plug from receptacle No. 1 (top, large receptacle); remove cap from receptacle NO. 2 (center) and remove protective cap from receptacle No. 3 (bottom) and install the shorting plugs found in the spare parts kit at the rear of container.

Step 10: Attach female plug of launcher safety switch electrical assembly to receptacle No. 1 of charge pallet.

Step 11: Attach 75 foot extension cable to male connector of launcher safety switch electrical assembly.

Step 12: Attach firing box to electrical receptacle on 75 foot extension cable.

Step 13: Attach branched cable to M51 Blasting Cap Tester.

NOTE: LAUNCH RAIL ELEVATION SHOULD BE LESS THAN 40 DEGREES TO COMPLETE CHECK.

Step 14: Set firing control knob to OFF position. Blasting cap tester SHOULD NOT REGISTER. If it does there may be a short in the wire or control box. Try the test with a different set of firing wire.

Step 15: Set firing control knob to POWER position. Blasting cap tester SHOULD REGISTER.

Step 16: Set firing control knob to CHARGE position. blasting cap tester SHOULD REGISTER. Then remove the shorting plug. Blasting cap tester SHOULD NOT REGISTER.

Step 17: Set firing control knob to ROCKET position. Blasting cap tester SHOULD NOT REGISTER.

Step 18: Install ball-lock safety pins in RAISE position.

Step 19: Using hydraulic hand pump, raise launcher rail to position (42-47 degrees). With firing control knob in ROCKET position, blasting cap test SHOULD REGISTER.

Step 20: Remove shorting plug from receptacle No. 3 (bottom) of container. With firing control knobs still in ROCKET position, blasting cap tester SHOULD NOT REGISTER.

Step 21: Remove charge electrical lead from the rear of container and connect to receptacle No. 2 (center) of container.

Step 22: Set firing control knob to CHARGE position. Blasting cap tester SHOULD REGISTER.

Step 23: Disconnect the charge electrical lead from receptacle No. 2 and replace the cap on the receptacle.

Step 24: Disconnect launcher safety switch electrical assembly from receptacle No. 1 and replace the cap on receptacle.

Step 25: Replace shorting plug on receptacle No. 3.

Step 26: Disconnect branched electrical cable from blasting cap tester.

Step 27: Disconnect control box from 75 foot extension cable.

Step 28: Remove ball-lock safety pins from RAISE position.

Step 29: Set detents to DISENGAGED (up) position.

Step 30: Rotate pump valve handle to RELEASE position, allowing rail to return to 0 degree position.

Step 31: Set detents to ENGAGED (down) position.

Step 32: Insert ball-lock safety pins in LOCK position.

6. FUSING THE LINEAR DEMOLITION CHARGE

a. Remove package fuse from the center of the charge. Remove shock cork assemblies from the center of the charge and store in the storage container. (Shock cords are used with the hard cover.)

b. Remove the fuse from package and inspect:

(1) check for moisture and corrosion.

(2) Check arming window it should be green with letter "S" showing.

(3) If window is red and letter "A" is showing do not use the fuse.

(4) Ensure shear pin is in place.

c. Remove protective cap from the fuse electrical receptacle and check for corrosion.

d. Using 2 to 3 Marines, fold back 3 to 4 layers of the linear charge as necessary to access arresting cable fuse connector and linear charge fuse connector located on the rear right of container.

e. Place arresting cable fuse connector on linear charge and remove ball-lock pin.

f. Screw on and tighten connector to fuse electrical receptacle. Screw on and tighten arming wire connector to arming pin assembly.

NOTE 1: Before arming wire is connected to arming pin assembly, stretch the arresting cable and arming wire connector until straight and measure two inches from the face of the arming wire connector. If arming wire slack is not two inches, loosen hose clamps. Adjust arming wire position on arresting cable until two inches adjustment is achieved. Tighten hose clamps on arresting cable.

Modifications have been made on the M58. arming wire has been weaved on the arresting cable to prevent malfunction on the fuse or arming of the fuse.

If hose clamps are loose at time of employment, fuse will not arm.

This two inch measurement also applies to the electrical connector.

NOTE 2: Never remove sock from fuse connector.

WARNING: NEVER ALLOW THE FRONT END OF A CONNECTED FUZE TO BE POINTED TOWARD ANYONE AS AN APPLIED FORCE WHICH SEPARATES THE FUZE FROM THE ARRESTING CABLE FUZE CONNECTOR WILL ARM THE FUZE.

g. Slide the fuse into arresting fuse connector and slide linear charge fuse connector shaft into center hole of the fuse.

h. Mesh the linear charge fuse connector pins with slots in the fuse.

i. Mesh slots of linear charge fuse connector shaft with arresting cable fuse connector key.

NOTE: Take up slack in arresting cable arming wire and fuse electrical lead before attempting to mesh arresting cable fuse connector and charge fuse connector.

j. Insert ball-lock pin into arresting cable fuse connector until it seats in linear charge fuse connector shaft hole.

k. Test the connection by pulling connectors in opposite directions.

CAUTION: IF ARMING WIRE CROSSES OR IS TANGLES WITH ELECTRICAL CABLE THERE IS A GOOD POSSIBILITY THE ARMING WIRE MAY BREAK OR FRAY THE ELECTRICAL CABLE AND CAUSE A MISFIRE.

l. Remove protective nylon cover from storage container.

m. Position protective nylon cover wear pad at rear center of linear demolition charge container.

n. Attach front and rear shock cord assemblies of protective nylon cover to linear demolition charge contain, leaving flaps open. Do not attach side shock cord assemblies until nylon cover is closed.

7. ROCKET MOTOR INSTALLATION

Step 1: Disengage detent.

Step 2: Remove ball lock pin.

Step 3: Assure that hydraulic control valve handle is in MANUAL RAISE/LOWER position. If launcher rail is up, move release valve handle slightly toward RELEASE position; slowly lower launcher rail until approximately 10 degrees is indicated on the clinometer then move release valve handle to the HOLD position. If launcher rail is down, actuate hand pump until 10 degrees is indicated on the clinometer.

NOTE: THE 10 DEGREE CLINOMETER READING ASSUMES ITEM IS ON LEVEL GROUND. ADJUST IF TERRAIN IS UNEVEN.

Step 4: Engage detent.

Step 5: Install ball lock pins.

Step 6: Cut and remove band from rocket shipping container, and remove the top.

Step 7: Using 2 to 3 Marines, remove rocket motor from shipping container. Lift rocket motor by the tube only. Do not use cable to lift or handle the motor rocket. (MK22 MOD.3)

Step 8: Ensure that the front plate of the MK22 Mod 4 is secured to head of rocket with four nylon screws and that ball lock pin is not inserted in head of rocket. For the MK22 Mod 3 ensure that retainer screw is in the box.

Step 9: Rest motor rocket on linear charge container with nozzle end facing forward.

Step 10: Inspect rocket motor for dents and corrosion. If there is no visible damage, the rocket motor may be considered safe for use.

CAUTIONS

DO NOT EXPOSE ROCKET MOTOR TO DIRECT SUNLIGHT FOR LONG PERIODS.

TEMPERATURE LIMITS FOR LAUNCHING THE 5 INCH ROCKET ARE -40° F TO 125° F.

IF ROCKET MOTOR HAS BEEN IN DIRECT SUNLIGHT FOR LONG PERIOD, PLACE IN SHADE AND KEEP WITHIN SAFE FIRING TEMPERATURE LIMITS FOR AT LEAST 6 HOURS BEFORE FIRING.

DO NOT TAMPER WITH OR ATTEMPT TO REPAIR ROCKET BEYOND INSERTING AND REMOVING THE BALL LOCK PIN.

WHENEVER POSSIBLE KEEP ALL PERSONNEL AWAY FROM REAR OR FRONT OF ROCKET DURING HANDLING.

WARNING: IF ROCKET MOTOR IS DROPPED IN EXCESS OF TWO (2) FEET DO NOT USE. RETURN TO ASP.

Step 11: With nozzle end forward, use 2 to 3 Marines to lift and hold rocket in front of rail, and insert rocket rear T bracket into launcher rail.

Step 12: Lift up two (2) forward hinged alignment pins and slide rocket onto launcher rail, and insert front T bracket into launcher rail groove.

Step 13: Position one (1) Marine at the rear of trailer to operate rocket release mechanism.

Step 14: Pull back on rocket release handle and push rocket rearward until it firmly seats on front and rear alignment pins.

Step 15: Release rocket release handle and pull forward on rocket to ensure that there is no forward movement.

Step 16: Pull right hand knobs away from rail while rotating attached bolt downward into a vertical position and hand tighten all four hand knobs to engage rocket bands. Bolts should be at right angle to rocket band.

Step 17: Raise launcher rail to 20 degrees as indicated on clinometer.

Step 18: Take bridle from each side of the rocket rear gently loop up the first 18 inches. Insert cable under the cable sheath. Ensure that cable slides freely and approximately 18 inches of cable are looped out of rear of cable sheath. Ensure that cable does not get caught on any part of the launcher.

Step 19: Place rocket bridle cable loop on top of linear charge in an S-curve pattern from the rear to the front position of linear demolition charge container.

Step 20: Remove bolt and nut from rocket harness connector, slip bridle cable loop through harness connector and replace bolt through rocket harness connector and rocket bridle cable loop and tighten nut onto bolt.

Step 21: Loop the bridle cables from front of cable sheath to rear center of charge container, laying remainder of bridle cable forward onto charge.

Step 22: Starting from rear, close hook-and pile fasteners of protective nylon cover, covering bridle cable so that bridle cable exits from rear center of cover.

Step 23: Now secure side rear shock cord assemblies to charge container.

Step 24: Slowly lower launcher rail until rocket just touches nylon cover and lock into position.

8. PRE-FIRING ELECTRICAL CONNECTION AND CONTINUITY CHECK

Step 1: Connect 75 foot cable to selector switch.

Step 2: Ensure launcher rail is at approximately 5 degrees.

Step 3: Using half-hitch knot, tie 75 foot special purpose cable to the left rear of launcher frame with adequate slack to allow connection to safety switch.

Step 4: Remove protective cap from receptacle No. 1.

Step 5: Remove safety switch electrical lead from J-1 box and secure to receptacle No. 1.

Step 6: Remove plug from 75 foot cable and secure to safety switch assembly connector J-1.

Step 7: Remove protective cap from receptacle No. 2 and secure linear charge electrical lead.

Step 8: Remove protective cap from receptacle No. 3 and connect shunt plug.

Step 9: Attach branched cable to blasting cap circuit test set M51.

NOTE: PULL UP AND TURN TO MOVE SWITCH

Step 10: Ensure selector switch is in OFF position, operate the test set. It SHOULD NOT register.

Step 11: Set selector switch to POWER position, operate the test set. It SHOULD register.

Step 12: Set selector switch to ROCKET position, operate the test set. It SHOULD NOT register.

Step 13: Set selector switch to CHARGE position, operate test set. It SHOULD NOT register.

Step 14: Raise launcher manually to 47 degrees.

Step 15: Set selector switch to ROCKET position, operate test set. It SHOULD register.

Step 16: Set selector switch to CHARGE position, operate test set. It SHOULD register.

Step 17: Return selector switch to OFF position.

NOTE: IF DISCREPANCIES EXIST, RECHECK CONNECTIONS AND REPEAT ABOVE STEPS AS NECESSARY.

NOTE: IF DISCREPANCIES STILL EXIST, DISCONNECT SAFETY SWITCH ELECTRICAL LEAD FROM RECEPTACLE NO. 1, DISCONNECT 75 FOOT CABLE FROM J-1 BOX AND CONNECT TO RECEPTACLE NO. 1 AND CONNECT SAFETY SWITCH ELECTRICAL LEAD TO J-1 BOX.

NOTE: REPEAT ABOVE STEPS. IF DISCREPANCIES STILL EXIST, CHANGE LINEAR CHARGE CONTAINER AND REPEAT ABOVE STEPS.

NOTE: IF DISCREPANCIES STILL EXIST, RETURN LAUNCH RAIL ASSEMBLY TO MAINTENANCE, CHECK ELECTRICAL SYSTEM ON J-1 BOX.

WARNING: IF J-1 BOX IS BYPASSED, AND LAUNCHER RAIL IS IN DOWN OR STOWED POSITION, WHEN SELECTOR SWITCH IS IN ROCKET POSITION, THE TEST SET WILL REGISTER. BEFORE M34 BLASTING MACHINE IS CONNECTED ENSURE LAUNCHER RAIL IS AT 42 TO 47 DEGREES.

Step 18: Slowly lower launcher rail until rocket just touches nylon cover and lock into position.

Step 19: Disconnect shunt from receptacle No. 3 and replace protective cap.

Step 20: Remove protective cap from rocket electrical lead and receptacle No. 3.

Step 21: Secure rocket lead to receptacle No. 3.

Step 22: Repeat steps 10 to 18.

Step 23: The primary operator will keep the M34 blasting machine and M51 test set in his demo bag.

Step 24: Insert cable assembly switch cable into holders (pig tails) along left side of launcher and roll up extra cable and place with cable assembly switch into front storage container. Also return all shunt plugs into container and secure lid.

Step 25: Insert ball-lock pin into head of rocket.

WARNING: FAILURE TO INSERT BALL-LOCK PIN COMPLETELY INTO FORWARD SHIPPING PLUG OF ROCKET MOTOR MAY RESULT IN ROCKET BURN OUT ON THE RAIL OR PARTIAL DEPLOYMENT OF LINEAR CHARGE.

Step 26: Engage detents (down position) and assure that ball-lock pins are in RAISE position.

Step 27: Move hydraulic control valve handle to pressurize accumulator position.

Step 28: Use pump handle to manually pump pressure to 3200 PSI (green area) as indicated on gage.

Step 29: Connect trailer to designated towing vehicle.

Step 30: Transfer selector switch assembly 75 foot cable, lanyard handle, M34 blasting machine and test set to primary operator.

NOTE: IF HYDRAULIC SYSTEM IS UNSERVICABLE IN A TACTICAL SITUATION, ONE MARINE CAN LIFT THE LAUNCHER RAIL AND ROCKET WHILE ANOTHER MARINE MONITORS THE CLINOMETER AND LOCKS THE RAIL AT 47 DEGREES, PROVIDED THE TRAILER IS LEVEL.

NOTE: IF TRAILER IS NOT LEVEL DUE TO TERRAIN OR ANGLE FROM TRAILER TO TOWING VEHICLE, LISTEN FOR TWO ENGAGEMENT OF DETENT THEN LOCK INTO POSITION, OR VISUALLY CHECK THE LAUNCH POSITION INDICATOR.

NOTE: AVOID TOWING THE LAUNCHER WITH THE ROCKET MOTOR ON THE LAUNCH RAIL AS MUCH AS POSSIBLE, ESPECIALLY OFF ROAD. TRY TO ESTABLISH YOUR LOADING POINT AS CLOSE AS PRACTICAL TO THE AREA WHERE THE SYSTEM WILL BE FIRED.

NOTE: WHEN TOWING A LOADED TRAILER, VEHICLE SPEEDS SHOULD BE RESTRICTED TO 15 MPH ON TRAILS AND 10 MPH OFF ROAD. VEHICLE COMMANDER AND NCOIC SHOULD KEEP THE TRAILER UNDER OBSERVATION.

9. EMPLOYMENT PROCEDURES

a. ROCKET AND CHARGE DEPLOYMENT

(1) Drive tow vehicle and launcher straight ahead to orient the rocket to fire across the target. Stop 62M from the edge of the minefield.

(2) The primary operator will be seated in the T. C. Hatch if AAV is used.

(3) Take up slack in lanyard and pull to raise launcher rail.

(4) Allow a minimum of 10 seconds for launcher rail elevation.

(5) Visually check to ensure rocket is elevated to proper firing angle.

WARNING: To prevent launch at improper angle, launcher should not be attempted in extremely uneven terrain.

(6) Ensure selector switch is in the OFF position. Test the M34 blasting machine, if it is serviceable, attach branch cable to connections on the M34.

(7) Ensure area is clear, request permission to fire rocket.

(8) Set selector switch to rocket position and repeatedly squeeze the M34 and wait approximately 10 seconds for completion of rocket deployment.

(9) If rocket fails to deploy repeat previous steps.

(10) If rocket fails to fire after two attempts, check blasting machine connection, set selector switch to off and then back to rocket position, attempt to fire.

(11) If rocket fails to deploy again, set selector switch to OFF position. Disconnect blasting machine and refer to misfire procedures.

(12) Visually verify line charge is properly extended with arresting cable taunt.

(13) Set selector switch to CHARGE position.

(14) Operate M34 blasting machine repeatedly to detonate M58A4 line charge.

(15) If linear charge fails to detonate, repeat step 13.

(16) If linear charge fails to detonate after two attempts, check blasting machine connections, set selector switch to OFF and back to CHARGE position and repeat firing.

(17) If linear charge fails again, set selector switch to OFF position, disconnect blasting machine and refer to misfire procedures.

(18) Disconnect leads from M34 and set selector switch to OFF position.

(19) Disconnect selector switch assembly, and as soon as possible return lanyard and 75 foot cable to container.

b. DANGER AREAS

(1) Surface danger zone for firing the mine clearing line charge with the M58, high explosive charge.

NOTE 1: Firing personnel within area F shall be in protected position or armor vehicle.

NOTE 2: Spectators shall not be allowed within surface danger zone or noise hazard area.

NOTE 3: Linear charge should not be towed by the M1 due to high exhaust temperature.

(2) Area F and fragmentation zone (in detail) for firing the mine clearing line charge with the M58, high explosive charge.

(3) Surface danger zone for firing the mine clearing line charge with the M68, inert charge.

10. MISFIRE PROCEDURES

a. ROCKET MISFIRE

(1) Ensure that M34 blasting machine is disconnected and the selector switch is set to the off position.

(2) Keep launcher aimed at target minefield for 30 minutes in case of hangfire.

(3) After 30 minutes have passed, approach launcher, remove rocket cable from receptacle No. 3 and immediately secure protective cap on rocket cable connector.

(4) Install shunt into receptacle No. 3, connect M51 to selector switch, rotate selector switch to rocket, test circuit.

(5) M51 lamp lights if circuit is serviceable. Set selector switch to OFF and disconnect. Remove shunt, install protective cap on receptacle No. 3. If M51 lamp did not light, fault is in the circuit or safety switch. Further fault isolation is necessary.

(6) Move control valve handle to MANUAL RAISE/LOWER position and pull handle of release valve to lower rocket. Remove ball-lock pin from rocket head cap.

(7) Tow launcher out of the danger area to avoid exposing personnel.

(8) Remove rocket from launcher.

NOTE: The following four steps apply for rockets known to be misfires. If something obvious is found in disassembly indicating the misfire was not the fault of the rocket (such as a cut cable) the rocket may be turned in as a "field return" upon decision of the unit commander.

(9) Use ink or paint marker to print "MISFIRED" on rocket.

(10) Repack rocket in original box if available or another available container.

(11) Use ink or paint marker to print "MISFIRED ROCKET" on container.

(12) Return rocket to ASP and submit QDR.

b. LINEAR CHARGE MISFIRE

(1) Ensure that M34 blasting machine has been disconnected and selector switch is set to OFF position.

(2) Report misfire to breach commander or OIC.

(3) Check all electrical connections to linear charge for proper assembly. Correct problem immediately and repeat firing sequence.

(4) If charge has not detonated at this point, wait thirty (30) minutes.

(5) If still there is no fire, request permission to hand prime the linear charge.

(6) Disconnect M34, with 1 block of C-4 or TNT and appropriate length of time fuse, 1 blasting cap and fuse igniter carefully follow the path of linear charge and place charge on the second block of C-4.

(7) While down range check the fuse for arming. If conditions allow recover fuse.

(8) Pull fuse igniter and carefully return to safety.

(9) Submit Ammo Deficiency Report.

WARNING, WARNING, WARNING-

1. NEVER, EVER USE A LINE CHARGE TO SYMPATHETICALLY DETONATE ANOTHER LINE CHARGE THAT HAS FAILED TO EXPLODE IN PEACETIME TRAINING. (ONLY UNDER COMBAT CONDITIONS)

2. VOLITILITY OF BOOSTERS AND PETN WHEN EXPOSED TO FIRE/HEAT WHICH IS LIABLE TO CAUSE UNINTENDED DETONATION OF LINE CHARGE.

3. NEVER FIRE LINE CHARGE INTO AREA WHERE BRUSH, ETC. IS AFLAME.

11. MAINTENANCE

a. TRAILER-MOUNTED LAUNCHER

(1) Before Operation

(a) Rocket launcher rail: Check alignment pin, hand knobs, and bridle cable sheath for damage and missing parts. Visually check to ensure rail and tail groove are straight and free from obstruction. Check operation and free movement of hand knob assemblies, lubricate hand knob assemblies.

(b) Launch support: Check rail supports and detent assemblies for damage and missing parts. Check to ensure that white T-stripe is visible from the front of the linear rail support check pin and its weld on right rail support is not damaged or bent. Lubricate rail support and detent.

(c) Clinometer: Inspect condition of gauges.

(d) Safety switch: Check switch safety switch for damage or missing parts, and ensure roller moves freely.

(e) Hydraulic system: Check hydraulic cylinder, hose, pump, and accumulator for leaks. Visually check hydraulic gauge for damage. Check pump handle and control knob for damage. Check hydraulic fluid level.

(f) Frame: Visually inspect frame, attaching hardware for damage, and properly secured.

(g) Support equipment: Check to see that all support equipment is installed on launcher or properly stowed.

(2) During Operation

(a) General operation: note any improper operation of launcher.

(3) After Operation

(a) Operating faults: Correct or report any faults noted during operation.

(b) Lubrication: Lubricate launch rail groove.

(c) Clean: Wipe off launcher. Wash if required. Inspect for rust and corrosion.

NOTE: Report all damage or missing components to organizational maintenance for repair or replacement.

b. TRAILER CHASSIS M353

(1) Before Operation.

(a) Tires: Gage tires for correct pressure. Note any apparent loss of air, unusual wear, or missing valve caps.

(b) Wheels: Inspect wheel studs nuts and hub covers screws to see that they are present and secure.

(c) Intervehicular hoses: Inspect hose to see that they are in good condition and securely connected.

(d) Intervehicular cable: Inspect cable to see that it is in good condition and that all connectors are correctly assembled and secured in the mounting clips.

(e) Hydraulic tubes and hoses: Look under vehicle and observe hydraulic tube and hose connections for indication of brake fluid leaks.

(f) Lights: Operate taillights (if tactical situation permits) and observe functioning. Visually inspect reflectors.

(g) Frame: Visually inspect frame, towing lunette and safety chains.

NOTE: Report all damage or missing component to organizational maintenance for repair or replacement.

(2) During Operation

(a) General operation: Be alert for any unusual noises or improper operation of brakes, swivel caster, retractable support, and leveling jacks.

(3) After Operation

(a) Operating faults: Investigate and correct or report any faults noted during operation.

(b) Suspension system: Inspect suspension system and associated mounting parts for damage.

(c) Air filter: Remove pipe plug from bottom of air filter, drain filter, and install plug.

(d) Lubrication: Grease all grease points.

(e) Clean: Wipe off exterior of trailer, wash if required. Check for rust and corrosion.

(f) Miscellaneous assemblies; Inspect assemblies such as air filter, air chamber and master cylinder, swivel caster, retractable support, and hand brake levers for looseness of mountings or connections.

REFERENCE (S):

TM-9-1375-215-14

UNITED STATES MARINE CORPS
COMBAT ENGINEER INSTRUCTION COMPANY
MARINE CORPS ENGINEER SCHOOL
PCS BOX 20069
CAMP LEJEUNE, NORTH CAROLINA 28542-0069

C-23H03
6 June 00
(95 POI)

STUDENT HANDOUT

OBSTACLE BREACHING

1. PURPOSE. The purpose of this period of instruction is to provide you with the basic knowledge in the tactics, techniques, procedures and equipment for breaching simple and complex obstacles.

2. INTRODUCE LEARNING OBJECTIVES

a. TERMINAL LEARNING OBJECTIVE(S):

(1) Given a tactical situation, supervise the breaching of the obstacles in accordance with FM 5-250, FM 5-101, FM 90-13-1, and FM 20-32. (1302.1.10)

b. ENABLING LEARNING OBJECTIVE(S):

(1) Given a tactical situation, describe the procedures to breach obstacles in accordance with FM 5-250, FM 5-101, FM 90-13-1 and FM 20-312. (1371.1.10a)

(2) Given a tactical situation, identify the quality control measures necessary to breach obstacles in accordance with FM 5-250, FM 5-101, FM 90-13-1 and FM 20-312. (1371.1.10b)

(3) Given a tactical situation, identify the equipment necessary to breach obstacles in accordance with FM 5-250, FM 5-101, FM 90-13-1 and FM 20-312. (1371.1.10c)

(4) Given a tactical situation, organize personnel for sweep teams in accordance with FM 5-250, FM 5-101, FM 90-13-1 and FM 20-312. (1371.1.10d)

(5) Given a tactical situation and a map, with the aid of references, evaluate potential breach sites in accordance with FM 90-13-1. (1371.1.10e)

(6) Given a tactical situation and a map, with the aid of references, identify the intelligence requirements in accordance with FM 90-13-1. (1371.1.10f)

BODY:

1. COMPLEX OBSTACLES

a. A complex obstacle is a combination of single explosive and/or non-explosive obstacles. While the breach of a single obstacle may be rather simple, the breach of a complex obstacle is a much more formidable task and requires extensive planning and coordination.

b. Complex obstacle systems combine the use of mines along with non-explosive obstacles such as wire, antitank ditches, sand berms/walls, tetrahedrons, etc. The result is a belt of obstacles. These belts of obstacles may also be duplicated in depth to present an even greater obstacle system.

c. Where possible, the enemy will enhance these complex obstacles by tying them into natural obstacles such as wet or dry gaps, wooded areas, wet lands and elevated areas. Also, the use of cultural or man made features such as above ground pipelines may be used to add to the effectiveness of the system.

d. Complex obstacle systems are closely integrated with a fire plan. Integrating obstacles with supporting arms fire provides a combination of potential kills that is far greater than either could get alone. Preplanned fires can arrive on target within minutes from the time the fire is called and can be adjusted on the breaching location rapidly. Artillery will cover both obstacles and bypasses to create fire sacks and kill zones.

e. Although the complex obstacles encountered on the battlefield may differ in size and composition, the basic employment concepts remain the same and require a well planned and integrated combined arms operation to breach.

f. It must be realized that successful breaching of a complex obstacle system is a combined arms operation, using all combat support assets available to the ground combat element (GCE) commander. Successful accomplishment will be contingent upon the degree of preparation, planning, and rehearsal accomplished prior to the operation.

g. Due to the fact that complex obstacle systems are relatively inexpensive to construct, quick to emplace, and very effective in delaying, disrupting and channelizing movement, it is therefore likely we will be challenged by them more frequently in the future.

2. BREACHING OPERATIONS TERMINOLOGY

a. "BULLING THROUGH:"

(1) NOT A BREACH, rather a desperate act taken to extricate oneself from the combined grip of an obstacle and/or decisive engagement.

(2) Not an option a commander considers during planning.

(3) Executing a "Bull Through" is a sure sign that something went drastically wrong.

b. "OBSTACLE REDUCTION:" Making a lane or finding a path in which

forces and/or equipment can advance through an obstacle.

c. "PROOFING:" Verifying the lane is free of mines; based on the commander's "acceptable risk." Done in concert with obstacle reduction!

d. "BYPASS:" An alternate route that avoids an obstacle.

e. "BREACHING ACTIONS:" Actions taken on the chance of obstacle contact. Includes all aspects in planning, coordinating, and executing breaching operations.

3. COMBINED ARMS BREACHING DOCTRINE

a. BREACHING TENETS

(1) Intelligence (OBSTINTEL)

(2) Breaching Fundamentals

(3) Breach Organization

(4) Mass

(5) Synchronization

b. INTELLIGENCE (OBSTINTEL)

(1) Mission Success: depends largely on how well you see the battlefield.

(a) Intelligence, provides information on how we attack and/or how we will breach, attacking with an unverified enemy template sacrifices the initiative to the enemy.

(b) IPB (Intelligence Preparation of the Battlefield, FM 34-130), focuses the intel collection effort; OBSTINTEL is critical component to all offensive and subsequent breaching operations.

1. I.P.B. focuses the intel collection effort; OBSTINTEL is critical component to all offensive and subsequent breaching operations.

2. Attacking with an unverified enemy template sacrifices the initiative to the enemy.

(2) IPB Process:

(a) Why IPB?

1 Used to determine the impact of METT-TSL on operation: and presents this information graphically.

2 Continuous process which supports planning and execution for all operations.

3 Helps determine and evaluate enemy capabilities,

vulnerabilities and feasibility of enemy courses of action.

4 Assists in situation and target development, showing where the enemy can most effectively engage by fire and maneuver. The commander can, therefore, identify the following:

HVT: High Value Targets
HPT: High Price Targets
Breach Points
Bypass Point
Overwatch Areas

(b) A thorough OBSTINTEL provides the following:

1 Location, Orientation, and types of obstacles.

2 Minefields

* Composition, density and depth

* Types of mines (AT and AP)

* Types of fuses (Single, double impulse, tilt-rod, magnetic)

* Buried or surface laid

3 Lanes gaps or Proposed breaching points

4 Presence of wire (tactical, supplementary, or protective)

5 Location of enemy direct-fire weapon;

6 Nonexplosive obstacles (AT ditches, berms, log cribs, etc.)

c. Breaching Fundamentals. The fundamentals listed below must be applied to ensure success when conducting an opposed breach.

(1) Suppress

(a) Suppression is the focus of all available fires on enemy personnel, weapons, or equipment to prevent effective fire or the observation of fires on friendly forces. Oppressive fires can include the full range of weapons from direct and indirect fires, electronic countermeasures (ECM), air support, and naval gunfire. The purpose of suppression is to protect those forces reducing and maneuvering through the obstacles. Also serves to soften the gain fire superiority and thus initial foothold (assault force objective).

(b) Effective suppression is the mission-critical task during any opposed breaching operation. Suppressive fires in sufficient volume (3:1minimum) serve to isolate the breaching site. Successful suppression generally triggers the rest of the required combat actions at an obstacle.

Fire control measures are used to ensure that all fires are massed, lifted, and shift-synchronized with other actions at the breach site.

(2) Obscure

(a) Obstruction hampers enemy observation and target acquisition and conceals friendly activities and movement. Obscurities deployed on or near the enemy position minimizes their vision. Screening smoke employed in the breaching area or between the breaching area and the enemy conceals movement and obstacle-reduction activities. It also" degrades enemy ground and aerial observation. Obscuration must be employed to protect obstacle reduction, passage of assault forces, and deployment of forces in assault formations.

(b) Obscuration must be carefully planned to provide maximum degradation of enemy observation and fires, but it must not significantly degrade friendly fires and control. Terrain masking that obscures the breaching site is usually the only form of obscuration that is not a double-edge sword.

(3) Secure

(a) The force secures the breaching operation site to prevent the enemy-from interfering with obstacle reduction and passage of the assault force through the lanes created during the reduction. Security must be effective against outpost and fighting positions near the obstacle and against overwatching units and counterattack forces. In general, enemy tactical obstacles are secured by force.

(b) Once the breach site is selected, the appropriate breaching technique and types of support equipment can then be chosen.

(4) Reduce

(a) Reduction is the creation of lanes through or over the obstacle to allow the assault force to pass. The number and width of lanes created varies with the situation and type of breaching operation. The lanes must be sufficient to allow the force to cross rapidly and accomplish the mission. Lanes are handed over to follow-on forces. The unit reducing the obstacle will mark and report obstacle and lane locations and conditions to higher headquarters. Follow-on units will further reduce or clear the obstacle when possible and may improve marking of lanes.

(b) Reduction cannot be accomplished until the other breaching fundamentals (suppress, obscure, and secure) are applied and become effective. The force must isolate the breaching site and overwhelm the defender before reduction can proceed and the breach can be exploited.

d. Breaching Organization

(1) Support Force

(a) The support force usually consists of combat and combat support elements. The support force includes all units providing or

coordinating overwatch fires and other support (electronic warfare, close air, indirect fire support, including counter battery fire and smoke) to support the entire breaching operation. The mission of the support force is to win the direct and indirect fire battle in order to prohibit the enemy from influencing the breaching operation. Among the most crucial tasks, the support force tries to:

1 Eliminate enemy interference with the breach

2 Isolate battlefield, soften foothold

3 Fix enemy repositioning

4 Mass direct and indirect fires

5 Controls fires and smoke placement

6 Suppression is the mission critical task (3:1 Ratio)

(b) Reserve breaching and assault assets are included in this force (line charges, track width mine plows, gap crossing assets, mechanized infantry), and must be prepared to fulfill the mission of these elements should they become ineffective.

(2) Breach Force

(a) Primary mission of the breach force is to maneuver to and make the breaches at selected breach sites. Initially, the breach force travels with or directly behind the assault force. When obstacles are encountered the breach force will move forward after SOS has been accomplished (if opposed). During reduction, lanes are made, proofed, marked, and maintained until the breach force moves ahead or is relieved by support elements who will improve the lanes and begin additional reduction tasks, if required. Breach force responsibilities include:

1 Suppress, obscures, secures at a local level: intergrated into a task organized combined arms team.

2 Responsible for creating lanes

3 Marks and reports lane location/status

4 Assists in passage of assault force

(b) The breach force may be composed of engineers, tanks, AAV's, and infantry.

1 Engineers. Engineers are tasked with the reduction of obstacles. The breach force should be lead by an Engineer. Engineers may be further broken down into Obstacle Clearing Detachments (OCD) and Support Breach Teams (SBT) within the breach force.

2 Tanks. Tank assets are used to employ the Track Width Mine Plow, Track Width Mine Roller, line charges, CLAMMS, and Towed Assault

Bridge, AVLB, as well as providing direct fire.

3 AAV's. AAV assets maybe required to move the Engineers and Infantry to, through and from the breached lanes. They may also employ the MK 154 (3 shot) and MK 155 (trailer mounted) line charges along with their weapons station (MK 19 and M-2 .50 cal) can provide vital suppressive fires.

4 Infantry. Provide the security element of the Breaching Force and additional engineer assistance if necessary.

(c) Obstacle Clearing Detachments (OCD). OCDs are comprised of a combined arms team which is task organized to conduct obstacle reduction missions. OCDs, commanded by the senior engineer assigned to the team, can be responsible for conducting the following task:

1 Location of the forward edge of obstacle belt/minefields (unless assault force is leading w/organic or attached devices eg. TWMP)

2 Reduction of obstacles/minefields

3 Creating lanes for the advancement of assault forces

4 Employ assault bridging assets

5 Proofing of lanes as required based on "commander's acceptable risk"

6 Conducting "hasty marking" of lanes (at a minimum; entrance and exits must be marked)

7 Making the following reports and/or signals:

a Location of "forward edge" of minefield/obstacle

b Initiation of the breach

c Location of entrance and exit of each lane

d lane open and ready for travel

(d) Support Breach Teams ISBT). SBTs are comprised of a combined arms team which are task organized to support OCDs. SBTs, commanded by the senior engineer assigned, are responsible for the following tasks:

1 Be prepared to take over the primary mission of ported OCDs (duplication of assets of primary is necessary).

2 Provide immediate resupply to OCDs as required

3 Provide assault bridging assets forward to OCOs as required

4 Create and mark additional lanes for follow on forces as required

5 On all lanes, make necessary improvements to travel way and lane markings as required

6 Proof all lanes as required

(3) Assault Force

(a) The assault force may consist of infantry, armor, AAV and engineers. Primary responsibilities of the assault force are to provide close-in security of the breach force, to exploit gaps in the obstacle by maneuvering through the lanes created by the breach force, deploy in attack formations to defeat the enemy and secure the enemy side of the obstacle.

1 Destroys or dislodges enemy

2 Secures initial foothold on objective

3 May be committed to secure by force occupation

4 Assists support force in SOS

(4) Follow on Forces

(a) After initial lanes have been breached, follow on forces will be used to create additional lanes, expand lanes, and improve marking systems. This task can be accomplished by the Engineer Support Battalions (ESB) utilizing equipment designed to accomplish this mission, (i.e. full width mine plow with D8 Dozer).

(b) Additional breaching assets are included in this force in the event they encounter obstacles not cleared by the breaching force, or the breach element suffers losses to equipment and personnel which render it ineffective or incapable of completing its mission.

(c) Also contain CS assets and additional assault asset for expansion, exploitation of the breach head and sustainment of forward forces.

(5) Breaching Assets

(a) Each force (Breach, Assault and Support) must be equipped with breaching assets. The type and quantity of breaching assets is dependent upon (METT-TSL) and available equipment.

(b) Units should allow a minimum of 50% (ideally 75% to 100%)redundancy in breaching equipment for all 3 forces due to losses that are expected to occur in breaching operations (especially opposed breaching operations).

e. Mass

(1) Massing Suppression and Obscuration Fire: Breaching is conducted by rapidly applying concentrated force at a point to crack the obstacle and rupture the defense. Massed combat power is directed against an enemy weakness. The location selected for breaching depends largely on a weakness in

the enemy defense, where its covering fires are minimized, and where suitable terrain is located in order to conduct the breach. If the attacker cannot find a natural weakness, he creates one by fixing the majority of the defending force and isolating a small portion of it for attack. The isolated portion is then suppressed to eliminate effective fires on the breach forces. Smoke and terrain are used to assist in isolating the force under attack. Suppression requires the commander to mass sufficient overwatching direct fires to achieve at least a 3:1 firepower ratio. The old maxim "Hit 'em where they 'aint" applies.

(2) Massing the Breach Force: The commander also masses his engineers and breaching equipment to reduce the obstacle (recommended general support of GCE). The breach force is organized and equipped to use several different reduction techniques should the primary technique fail (a key vehicle is destroyed or casualties render dismounted engineers ineffective). Additional reduction assets are present to handle the unexpected. At least 100 percent redundancy is required and is positioned with the breach force.

(3) Massing the Assault Force: Achieving necessary mass for the assault requires the breach force to open sufficient lanes through the obstacle to permit rapid passage and the buildup of forces on the far side. A mounted BLT requires a minimum two lanes to allow two companies to pass simultaneously in column while minimizing lateral movement. A dismounted assault force requires one lane for each leading assault platoon. A mounted BLT requires at least two lanes. However, more lanes will speed passage and provide additional security measures while traveling through the danger zone. The breach force will attempt as many simultaneous breaches as possible to ensure that at least two are successful and will continue to create more lanes within its capability.

This normally results in the breach force simultaneously using a combination f mechanical and manual techniques. The tactical situation may require additional lanes to quickly pass a large assault force through the obstacle to achieve a sufficient combat power ratio.

a. Mass (Impact on planning)

(1) Focuses on concentrating of combat power.

(2) Directed against enemy weakness or creates a weakness.

(3) Mass considered in:

(a) Direct/Indirect Fires

(b) Obstacle Reduction Assets

(c) Assault Force

(4) Task Organization (Integration of maneuver and engineer units)

(5) Scheme of Maneuver

(6) Level/Type of Breach

(7) Centralized/Decentralized Command and Control

f. Synchronization

(1) Breaching operations require precise synchronization of the SOSR breaching fundamentals by support, breach, and assault forces. Failure to synchronize effective suppression and obscuration with the obstacle reduction and assault can result in rapid, devastating losses of friendly troops in the obstacle or in the enemy's fire sack.

(a) Synchronization ties the breach tenets together

1 INTEL DRIVES BREACH PLANNING

2 Intel collection supports maneuver planning

3 Breach organizations apply fundamentals

4 Mass Achieved: Right place, right time, right assets

(b) Synchronization means:

1 Breach plan supports maneuver plan

2 Unity of effort

(2) The commander ensures synchronization through proper planning and force preparation. Fundamentals to achieve synchronization are:

* Detailed reverse planning.

* Clear subunit instructions.

* Effective command and control.

* A well-rehearsed force.

(3) Command and Control. Effective command and control is paramount to synchronization. Command and control is integrated into the plan through the use of maneuver control measures and the positioning of key leaders.

(4) Proficiency. Proficiency is achieved through repeated rehearsals. Rehearsals should be done numerous times and be graded by independent evaluators. Commanders must ensure they are thoroughly debriefed by and that this information is disseminated to all participants. This will enable them to make the necessary corrections which will increase the probability of mission accomplishment. Rehearsals should be paced (crawl, walk, run philosophy) with night and NBC conditions, considered.

3. TYPES OF BREACHING OPERATIONS

a. In-Stride Breach/Hasty Breaches.

(1) Characteristics.

(a) Conducted without loss of momentum over simple obstacles where intelligence may indicate a weak or weakly defended obstacle

(b) Actual breaches are conducted on the subordinate levels, however, this does not mean the force executes a spontaneous, unsynchronized breaching operation. Capability to breach is organic with subordinate elements. No joint/ concentrated effort needed to force a change in task organizations in order to conduct a breach.

(c) Breaches are executed through immediate action drills which are planned for and rehearsed in advanced. Combat units should have a decentralized breaching SOP detailing the performance of hasty breaches.

(d) Subordinate ground commanders are responsible for designating specific support, breach and assault forces based on his task organization. He is also responsible for synchronizing the SOSR breaching fundamentals through his own detailed planning or well-rehearsed immediate action drills.

(e) In-stride breach tactics enables a TF to seize and maintain the initiative through simple, decentralized, independent breaching operations conducted under the responsive command and control of the company team commanders.

b. Deliberate Breaches

(1) Characteristics

(a) Designed specifically when units must cross an obstacle in order to continue the mission to another objective.

(b) Conducted when a unit fails an attempt of an in-stride breach on enemy tactical obstacles and/or when force allocation ratio: indicate that a confirmed enemy situation is beyond the capabilities of a subordinate unit.

(c) Requires detailed reconnaissance, exhaustive combined arms rehearsals, and overwhelming suppression of the enemy's overwatch direct fire weapons.

(d) Unlike the in-stride breach, the support, breach and assault forces for a deliberate breach are given specific objectives and detailed control measures for the attack against the obstacle system.

(e) Reduction of the obstacles normally a mission of an engineer-heavy breach force. It masses reduction efforts, attempting large number of lanes simultaneously to overload defensive fires.

c. Assault Breach

(1) Characteristics

(a) Conducted when a subordinate unit has been assigned the mission to assault an enemy's defense as part of a larger force's action so on the objective.

(b) Conducted when the enemy has had time to prepare protective obstacles around or within its positions.

(c) The assault breach is characterized as the most dangerous and confusing phase of the attack.

(d) Extensive protective obstacles and fortifications are covered by interlocking small arms fires and close-range anti-armor weapons while other close-in obstacles are a combination of wire, AP and AT mines, fortifications, and entrenchments.

d. Covert Breach

(1) Characteristics

(a) Covert breaches are used by dismounted forces during limited visibility. They are silently executed to achieve surprise and to minimize casualties.

(b) Relies on stealth, quiet manual lane reduction techniques, and dismounted maneuver. Commanders must understand that the need for surprise weighs the need for overwhelming suppression.

(c) Allows the assault force to bypass enemy resistance or to assault at an unexpected time and place.

(d) Surprise is essential for breaching enemy tactical obstacles to support a follow-on mounted attack.

(2) Fundamentals

(a) Suppress. Suppression is always planned for during the covert breach however, remains "on order" if or when it is needed. Suppressive fires are executed when:

1 Lanes are open and the assault is initiated.

2 Covert breach is discovered in mid-breach.

3 Covert breach force completes lane reduction and detonates the charges to clear mines and obstacles in the lanes, signaling direct and indirect suppressive fires for the assault through the obstacle.

(b) Obscure. Obscuration is a necessary condition for covert breaching. Overt breaches are best conducted during naturally reduced, visibility such as darkness, snowfall, rain, or fog.

(c) Secure.

1 Provided by a portion of the breach force that is organized into a security team which will cover the movement of the reduction team if discovered.

2 Achieved through deception operations.

4. PHASE OF BREACH OPERATIONS. Upon receipt of a mission to conduct a deliberate breach, a battalion task force, if not already task organized to do so, must immediately reorganize based on all current enemy intelligence in regards to METT-TSL. The breach location, azimuth of lanes, maneuver coordination measures (phase and coordination lines), any deception plan which may be initiated, and the specific mission of each element within the task force will be determined. The stages of action necessary to perform a successful breach operation will then be initiated.

a. Approach. The task force will cross the line of departure at the prescribed time in the proper formation as dictated by the threat level, changing tactics and formation to meet changing situations. The sequence of travel is as follows:

(1) Screening or reconnaissance force:

(a) Prevents premature contact with the enemy and ensures the breach force does not become decisively engaged.

(b) Verifies intelligence information.

(2) Breach force:

(a) Must be in a position to immediately deploy upon contact with the obstacle belt.

(b) Prepare to begin obstacle reduction.

(3) Assault force:

(a) Follows in trace of BF (when combat heavy must lead)

(b) Prepared to assault through lanes created by the BF.

(4) Support force:

(a) Provides flank security during movement to contact;

(b) Prepared to deploy to overwatch positions and provide suppressive fires.

b. Deployment. Upon contact with the enemy obstacle, or at a predetermined phase line, the task force will immediately deploy into attack positions.

(1) Support force:

(a) Will assume overwatch positions;

(b) Commences suppressive direct/indirect fires and smoke on the enemy positions providing site security for the breach force;

(2) Breach force:

(a) Deploys to predetermined lane sites.

(b) Necessary, breach equipment moves forward.

(3) Assault force:

(a) Deploys to predetermined location.

(b) Assists with site security by providing suppressive fires.

c. Breach. Prior to initiating the breach, the BF commander must ensure his unit is properly oriented to the breach azimuth. Bear in mind that the 50% redundancy in breaching assets within the AF and SF is to be utilized if the BF becomes unable to complete its mission due to casualties or exhausting essential assets. (e.g. line charges, mine plows, etc.).

(1) Breach force:

(a) Battle hand-over from the GCE/Assault Commander to Breach Force Commander;

(b) Necessary assets move forward to mechanically, explosively, or manually reduce obstacles:, or use explosive and mechanical means concurrently;

(c) Mark the lane entrance and lane as the force moves forward;

(d) Adjust supporting fires when needed;

(e) Provide organic direct fire support;

(f) Report cleared obstacle status and keep the task force commander informed of progress;

(g) Mark lane exit;

(h) Develop a bridgehead on the enemy side of the obstacle and defend against counterattack;

(2) Assault force:

(a) Battle hand-over from the GCE/Assault Force Commander to the Breach Force Commander.

(b) Continue to provide suppressive fires.

(c) Deploys to positions in which it can quickly explode breached lanes.

(d) Assumes BF's role if it becomes incapable due to losses.

(3) Support force:

(a) Continues to provide suppressive/counterbattery fires.

(b) May deploy additional breach assets forward if necessary.

d. Assault. The assault stage is the rapid exploitation of lanes created by the BF to close with and destroy the enemy on the far side.

(1) Breach force:

(a) Battle hand-over from the Breach Force Commander to the GCE/Assault Force Commander.

(b) Provides direct fire on the enemy objective enabling the AF to advance forward.

(c) Coordinates or shifts indirect fires on the objective.

(d) Allows the AF to pass through its lines and assault the enemy objective.

(e) If required assists the AF in capturing the objective.

(2) Assault force:

(a) Battle hand-over from the Breach Force Commander to the GCE/Assault Force Commander.

(b) Moves rapidly through breached lanes and assumes attack positions on the enemy side.

(c) Utilizes fire, maneuver and reduction techniques to overcome the enemy.

(3) Support force:

(a) Shifts/lifts suppressive fires enabling AF to attack enemy positions

(b) Provides protective fires against possible enemy counterattack

(c) May provide a reserve force if it becomes necessary to overcome the enemy (exploit success, reinforce weak areas and start fresh elsewhere).

(d) Prepares for displacement forward for consolidation on the objective.

e. Consolidation. Upon seizing the enemy objective the task force will:

(1) Consolidate on the objective ensuring all-around security and defense.

(2) Arrange for supporting fires throughout the task force.

(3) Reconstitute supplies and forces.

(4) Ensure the treatment and evacuation of personnel and disabled equipment.

(5) If designated to do so, elements will create additional lanes, improve upon existing lanes by widening and marking, as well as provide lane guides for follow-on forces.

(6) Begin planning, make reconnaissance, issue necessary orders and continue mission if capable of doing so.

5. MINEFIELD BREACHING

a. General

(1) Minefield breaching is the creation of lanes and paths through a minefield to allow attacking forces to pass through it. The basic procedures are to create the lane(s), proof the lane(s) and mark the lane(s).

(2) Although mission, enemy, terrain and weather, troops and fire support, time space, logistics (METT-TSL) and varying conditions will determine specifics, the preferred techniques and equipment to be used are discussed in this lesson.

b. Lane Requirements

(1) Number of lanes. The number of lanes to be breached simultaneously will be based on the size of unit conducting the breach along with METT-TSL. Recommended number of lanes are:

COMPANY TASK FORCE - 1

BATTALION TASK FORCE - 2 to 3

(2) Width of lanes. Lanes for one-way travel will normally require a minimum of 4 meters, ideally 5-5 1/2 meters (based on equipment that created the lane). Lane width must be large enough to safely pass through all equipment negotiating the lane(s). Plans for lane improvement must be addressed in the overall breach plan.

(3) Separation between lanes. Parallel lanes should usually be no closer than approximately 250 meters because of artillery effects, and should be far enough apart to force the enemy to engage each breach separately. Certain terrain conditions and the enemy situation may require lanes to be closer or further apart. However, commanders must exercise extreme caution when performing simultaneously breached lanes in close proximity and must

ensure mutual supportability of his force when increasing distance between lanes.

(4) Follow-on breaching efforts. Follow-on breaching efforts ensure that lanes are breached and proofed in minefields up to about 5 to 5 1/2 meters wide.

(5) Follow-on lanes/lane expansion. After initial lanes are created by the breach forces, additional lanes will have to be created by follow-on forces to enable additional combat and combat support forces to flow through the obstacle. Ideally, lanes will be created parallel to initial lanes to allow for two-way traffic.

(6) Lane guides. Guides may be required at the entrances of lanes to preclude follow-on equipment going forward along both lanes, clogging up the lane, and hindering traffic returning to the rear. They also prevent vehicles from entering the lanes before proper lane expansion, proofing and marking efforts are complete.

15. CONTROL MEASURES

a. General

(1) Once an enemy minefield has been breached, friendly forces must move through the lanes as rapidly as possible. To avoid the concentration of possible targets for enemy weapons, extensive planning and control are essential. The control measures and procedures described may also apply to the passage of friendly forces through their own minefields, such as the withdrawal of a covering force.

(2) Traffic control through minefields must be carefully organized to ensure proper support of the operation. Vehicles move from rear holding areas into the minefield lanes along marked traffic routes designated for the particular units. Guides meet the units at forward holding areas and lead them to forward positions.

(3) Markers having letters, symbols or colors are used to designate each route and minefield lane through which traffic must pass. The route markers are placed on posts at least 1.5 meters high, and firmly fixed in the ground at regular intervals in the edges of the lanes and routes. Markers are clearly illuminated at night and must be easily distinguished from the minefield lane marking lights. Each unit is assigned a specific route and lane for its movement through the minefield

(4) Switch routes between adjacent traffic routes are established and marked so traffic may be quickly diverted from one route to the other, should a minefield lane become blocked. Control teams with radios are positioned at each switch to direct traffic.

b. Control Points/Areas

(1) Release Line. A line located prior to and after a obstacle belt that the Assault, Support, and Follow-on Forces release control of their forces to the Breach Force Commander for movement though a cleared lane or

across a gap.

(2) Release Point. Physical location where release/return of control takes place between the tactical unit commander and the Breach Force Commander. Release points are located along a release line.

(3) Traffic Control Point. TCPs are placed to maintain orderly traffic flow and move assigned units and vehicles to holding areas as required. TCPs are manned by MPs and provide control and information to higher headquarters and to vehicles moving to assigned holding areas.

(4) Holding Areas. Area is designed for dispersing units and/or vehicles in route to the lane, but used only if there are delays at the breach site. Holding areas help to eliminate the lucrative artillery/air targets presented by lines of vehicles waiting to cross.

e. Procedures

(1) Traffic priorities through the minefields are established in accordance with the operation plan (OPLAN). Although the priority is announced before the operation, the plan must be flexible enough to meet the tactical situation. Arrangements must be made for rearward movement of casualties and supply vehicles. Traffic control points are staffed by military police (MP) and established at critical locations to control and direct traffic. Holding areas are dispersed as widely as possible to avoid presenting a concentrated target. Local security is established at the far end of each minefield lane to prevent enemy infiltration. Engineers clear, mark, and maintain vehicle lanes and switch routes. They mark the front and rear boundaries of minefields to prevent vehicles and personnel from straying into the mined areas, and they also assist with removing damaged vehicles from minefield lanes. Recovery vehicles should be available near lanes for this purpose.

(2) Well organized, efficient communications are essential for traffic control through minefields. When great distances are involved, the primary system of communication is by radio, supplemented by telephone and messenger. Traffic control through a minefield or obstacle system is similar to the control of traffic during a well-conducted river-crossing operation. FM 90-13 contains additional guidance on command and control for river crossing operations that may also be applied to minefield passage operations.

6. MINEFIELD BREACHING EQUIPMENT (EXPLOSIVE SYSTEMS). Explosive systems (MK1/MK2 Linear Demolition Charges) are used to explosively breach a lane through a minefield. Linear charges will not destroy 100% of the mines in its path. It has limited effect on mines that have magnetic, blast hardened or multiple pulse fuses. Therefore, the lanes cleared by linear charges must also be breached by a mechanical system.

a. M58/MK 155 Trailer Mounted Linear Demolition Charge (LDC)/MK 2 MOD 0 Mine Clearance System

(1) Description

(a) The MK2 system is a trailer mounted, rocket deployed, linear explosive charge.

(b) The M58 linear explosive charge contains 1750 pounds of composition C-4 explosive and is 105 meters long. The explosive charge is anchored to the original container on the trailer by the arresting cable and offers a tethered standoff distance of 205 feet (62 meters). The electrical detonating system is contained within the arresting cable and permits detonation of the linear explosive charge seconds after deployment from the storage tub.

(c) The trailer, launcher, charge and rocket are separate items and are ordered as such.

(2) Employment

(a) The trailer mounted linear demolition charge is used to breach both antitank and antipersonnel minefields.

(b) The linear demolition charge is also very effective in the breaching of wire obstacles. However, it should only be used on wire obstacles employed in depth or in conjunction with minefields.

(c) The system must be ready to deploy prior to reaching a complex obstacle or minefield. The time required for preload and inspection is approximately 30 minutes and requires a 7.5 ton crane or a 6000 pound forklift.

NOTE: PROPER CONTINUITY AND PRE-FIRING INSPECTIONS OF THE LAUNCHER AND CHARGE WILL GREATLY INCREASE THE RELIABILITY OF THIS VALUABLE ASSET.

(d) The trailer mounted linear demolition charge can be towed by a number of combat vehicles such as tanks, amphibious assault vehicles (AAV's), light armored vehicles (LAV's), military 5-ton trucks, and other selected items of engineer equipment.

(e) Due to the extreme exhaust heat of the M1A1 tank, it should not be used to tow the MK2 system.

(f) A technique exists to tow the MK2 in Tandem. When using this technique, if one charge fails, the other can be used. Also you can breach minefields over 90 meters in depth using one host vehicle. When firing charges in tandem, the rear charge should be fired first.

(3) Effectiveness

(a) The M58 linear demolition charge will create a lane approximately 90 meters long and 16 meters wide. (Dependent on soil conditions and types of mines.)

(b) It is effective against single impulse pressure activated antitank mines and mechanically activated antipersonnel mines. The M58 is approximately 95% effective on surface laid and 80% effective against buried single impulse pressure activated antitank mines.

(c) The M58 has a very limited effect on mines that have magnetic, blast hardened or multiple pulse fuses unless it is essentially touching the mine prior to detonation.

NOTE: WARNING, WARNING, WARNING

1. NEVER, EVER USE A LINE CHARGE TO SYMPATHETICALLY DETONATE ANOTHER LINE CHARGE THAT HAS FAILED TO EXPLODE IN PEACETIME TRAINING. (ONLY UNDER COMBAT CONDITIONS)

2. VOLITILITY OF BOOSTERS AND PETN WHEN EXPOSED TO FIRE/HEAT WHICH IS LIABLE TO CAUSE UNINTENDED DETONATION OF LINE CHARGE.

3. NEVER FIRE LINE CHARGE INTO AREA WHERE BRUSH, ETC. IS AFLAME.

b. M59/MK154 Amphibious Assault Vehicle Mounted Linear Demolition Charge/MK1 MOD 0 Mine Clearance System

(1) Description

(a) The MK 1 system contains three M59 linear demolition charges and three MK 22, 5 inch rocket motors inside a dedicated amphibious assault vehicle hull.

(b) Although the M59 linear demolition charge is packed in a vertical vice horizontal container, the explosive charge composition is identical to the M58 and both utilize the MK 22, 5 inch rocket motor to propel the charge into firing position.

(2) Employment

(a) The MK 1 (Three Shot) was principally designed for deployment during amphibious assault operations through mined surf and beach areas.

(b) Currently under development is a track width mine plow for the AAV MK1 system which can be used for proofing. Until procured, the MK1 must be used in conjunction with tank track-width mine plows or full-width mine rakes.

(c) Though an AAV hull has obvious survivability deficiencies in comparison to a hardened tank hull, the MK 1 does offer the advantage of providing 3 linear demolition charges deployed from a single vehicle, enabling it to breach several belts and/or minefields over 90 meters.

(d) When firing on land the rear charge should be fired first to permit rapid reload, when firing in the water the forward charge should be fired first due to buoyancy factors.

(3) Effectiveness. The effectiveness of the M59 is the same as the M58 previously discussed.

NOTE: WARNING, WARNING, WARNING-

1. NEVER, EVER USE A LINE CHARGE TO SYMPATHETICALLY DETONATE ANOTHER LINE CHARGE THAT HAS FAILED TO EXPLODE IN PEACETIME TRAINING. (ONLY UNDER COMBAT CONDITIONS)

2. VOLITILITY OF BOOSTERS AND PETN WHEN EXPOSED TO FIRE/HEAT WHICH IS LIABLE TO CAUSE UNINTENDED DETONATION OF LINE CHARGE.

3. NEVER FIRE LINE CHARGE INTO AREA WHERE BRUSH, ETC. IS AFLAME.

c. M1A1/M1A2 Bangalore Torpedo

(1)Description

(a) The bangalore torpedo is a manually placed explosive-filled pipe that creates a foot path for personnel through antipersonnel mines and wire.

(b) It is issued in a demolition kit consisting of 10 sections (tubes). Each section is 5 feet long weighing 15 lbs. (11.5 LBS Explosive)

(2) Employment

(a) The bangalore torpedo was designed for use by dismounted infantry or engineers for breaching antipersonnel mines or wire obstacles.

(b) The bangalore torpedo is not effective in breaching antitank mines.

(3) Effectiveness. The Bangalore torpedo will create a path approximately 1 meter wide and as long as the number of sections employed against antipersonnel mines. It will create a path 3-4 meters wide through wire obstacles.

d. Antipersonnel Obstacle Breaching System (APOBS) (PLANNED TO BE FIELDED)

(1) Description

(a) The APOBS is a small linear type charge designed to breach a path in antipersonnel minefields and wire obstacles.

(b) It is a two man portable system weighing approximately 120 lbs.

(c) Has a 25 meter standoff and can be manually or command detonated.

(2) Employment. Is used by dismounted personnel to breach antipersonnel mines and wire obstacles. Due to its effective length, weight, standoff capability, and employment time it is more effective in breaching these type obstacles than its predecessor, the bangalore torpedo.

(3) Effectiveness. The APOBS will create a path 45 meters long by 0.6 meters wide through antipersonnel mines, and 45 meters by 3-4 meters wide, through wire.

7. MINEFIELD BREACHING EQUIPMENT (MECHANICAL SYSTEMS)

a. Tank-mounted Track-width Mine Plow (TWMP)

(1) Description

(a) The tank-mounted, track-width mine-clearing plow is used to extract and remove land mines from the minefield.

(b) It consists of a plow arrangement with 6 scarifying teeth to extract mines, a mold-board to cast them aside, and a leveling skid to control the depth of the plow.

(c) The plow can be mounted to the front of the M60 and M1 series tanks.

(d) The plows lift and push mines that are surfaced laid or buried up to six inches deep to the side of the track-width lanes. The plow creates a 68 inch cleared path in front of each track. The plow can be set to depths of 8", 10" or 12" depending on soil and depth of mines.

(e) It has an improved dog bone assembly centered between the plows to defeat tilt rod fused mines and magnetically influenced mines.

(f) Once mounted, the plow is raised and lowered by an electric motor, and is equipped with an emergency quick disconnect.

(2) Employment

(a) Track width mine plows are used to "breach" lanes that have been explosively breached by a linear demolition charge.

(b) Plows can also be used as a primary breaching device when no linear demolition charges are available, the linear demolition charge does not function or it deploys SUB-OPTIMALLY, or in a hasty breach.

(c) The plow weighs about 3.5 tons and when in the raised position, has little impact on a tank's maneuverability.

(d) When plowing, the tank is restricted to less than 5 mph depending on soil conditions. It cannot maneuver and must continue in a straight path through the minefield or it will damage the plow. The main gun must be traversed to the side during plowing operations since a mine detonation under the plow may cause debris to be thrown violently into the air damaging the tube. The area selected for the lane must be relatively flat and free of large rocks or other obstacles.

(e) The mine plow requires lift capability for mounting and takes up to an hour. It must be mounted well in advance of the mission. It cannot be easily mounted or transferred to another tank under battlefield conditions.

(f) In the center of the cleared lane there is a distance between the plow blades of 64 inches which cannot be cleared of pressure fused mines. Subsequent vehicles traveling on the cleared track lanes may eventually "belly out" detonating the remaining pressure fused mines.

(g) The cleared path created by the track width mine plow restricts the maneuverability of the vehicles following in trace. Follow on vehicles must have an inside wheel base of no less than 66 inches until a full width path has been provided. Lane widening and improvements must be accomplished as soon as possible after securing the opposite side of the obstacle.

(h) Mines armed with antihandling/disturbance devices, or magnetic and seismic fuzes may be activated when lifted by the plow, and may disable the plow. Further, long rectangular mines (e.g. the British Bar/Mine) may not spoil to the sides of the plow and may detonate and destroy the plow. Each track width mine plow can sustain 1-2 heavy mine detonations. Mines lifted by the plow are left in the spoil on each side of the furrowed path and remain a hazard until removed.

b. ANTITANK MAGNETIC MINE ACTUATING DEVICE (AMMAD)

a. Description

(1) The AMMAD (Improved Dog Bone Assembly) is a large, heavy, magnet device mounted between the inside tynes or rollers of the TWMPs or TWMRs.

(2) The AMMAD replaces the old dog bone chain assembly normally supplied with the TWMPs and TWMRs.

(3) When in use the AMMAD rolls along the surface of the ground, generating a magnetic field, causing the denotation of magnetically fused and tilt rod actuated mines harmlessly in front of the tank. Dependent upon mine type and proximity, it may become ineffective upon striking a single mine.

b. Employment

(1) The AMMAD should be used during breaching operations on all tanks equipped with TWMPs or TWMRs.

(2) The removal of the dog bone chain assembly and installation of the AMMAD can be accomplished by the tank's crew in the field.

c. Tank-mounted, Track-width Mine Roller (TWMR)

(1) Description

(a) The tank-mounted, track-width mine roller consists of a roller assembly, mounting kit, and a hand winch kit. The roller assembly weighs approximately 10 tons and consists of two push beams mounted to the front of the tank.

(b) The rollers are designed to defeat most antitank and antipersonnel mines which are single-impulse, pressure activated. The roller will create a 44 inch path in front of each track, with a 72" uncleared area in between.

(c) An antimagnetic mine actuating device (AMMAD) assembly, like the one used with the mine plow, is centered between the rollers to defeat magnetic influenced mines and tilt rod mines.

(2) Employment

(a) The track width mine roller is designed to detect mines. The system can be used to proof lanes that have been explosively breached if no track width mine plows are available. They may also be used as a secondary proofing device used in trace of a mine plow or rake.

(b) The track width mine roller is not intended to be a primary means of breaching minefields

(c) Because the track width mine roller system weighs approximately 10 tons, it has a great impact on a tank's maneuverability.

(d) When a tank equipped with a track width mine roller intends to cross an armored vehicle launched bridge (AVLB), the AMMAD assembly must be lifted and the AVLB curbing must be removed The additional weight may severely limit the crossing of some fixed and floating bridges.

(e) The M-1 tank track width mine roller system's quick disconnect could be prematurely activated by a roller detonating a mine and will require time for reinstallation.

(f) As with the mine plow, the main gun must be traversed to prevent damage from mine detonations. When employed in a suspected minefield, the roller tank must travel in a relativity straight path because tight turns may cause the roller to deviate from the paths of the track leaving the tank vulnerable to mines. Ground fluctuations, bumps and berms may cause the rollers to lift from the ground and miss mines.

NOTE: MINE ROLLERS ARE NOT A FIELDED T/E ITEM AND ARE TO BE KEPT IN MARINE CORPS INVENTORY AS CONTINGENCY ASSETS.

d. Full Width Mine Rake

(1) Description

(a) The full width mine rake is mounted to the M9 blade on the M60 tank and weighs approximately 4,000 pounds.

(b) The rake tines lift and push aside surface laid mines and mines buried up to 12" deep while sifting through sand or loose soil. It will proof a lane approximately 15 feet wide.

(c) Antipersonnel mines may not be defeated as they may slip through the full width rake's tines.

(2) Employment

(a) The full width mine rake should only be used to proof explosively breached lanes.

(b) The full width mine rake can be used to breach when linear demolition charges are not available or when linear demolition charges fail to function properly.

(c) The full width mine rake has little impact on a tank's maneuverability when stowed for transportation. The raking speed is 3-5 mph.

NOTE: FULL WIDTH MINE RAKES ARE NOT A FIELDED T/E ITEM AND ARE TO BE KEPT IN MARINE CORPS INVENTORY AS CONTINGENCY ASSETS.

e. Full Width Mine Plows (FWMP) (PLANNED TO BE FIELDED)

(1) Counter Mobility Vehicle (CMV) with full width mine plow.

(a) Under consideration for fielding is a countermobility vehicle (M60 hull) equipped with a full width mine plow to be used by the Combat Engineer Battalion (CEB), Marine Division.

(b) When fielded, this full width mine plow will be considered the primary equipment to be used on all proofing operations.

(2) Full Width Mine Plow w/D8 Dozer.

(a) Under development is a full width mine plow to be equipped with the D8 Dozer, with a tractor protection kit.

(b) When fielded, this system will be used for deliberate follow on proofing operations and lane improvements, conducted by the Engineer Support Battalions (ESB), FSSG.

8. PROOFING

a. Definition. Proofing is verifying that a lane is free of mines after explosive, mechanical and magnetic breaching efforts. This should always be accomplished immediately after the lane has been explosively breached.

b. Proofing Equipment

(1) When fielded, the CMV with FWMP should be considered as the primary piece of proofing equipment.

(2) Track width mine plow. Should be considered primary piece of proofing equipment.

(3) Track width mine roller. Used when plows or rakes not available.

(4) Full width mine rake. Is ideally suited for proofing antitank mines in sandy or loose soils.

(5) D8 Dozer with armored protective kit and full width mine plow, will be used for deliberate follow-on proofing and lane improvement.

(6) D7G Dozer with armored protective kit, or the M9 ACE. This type of equipment is not designed as proofing equipment and should be used only as a last resort when plows, rakes or rollers are not available.

10. PROOFING WITH THE TRACK WIDTH MINE PLOW (TWMP)

a. There are three basic methods listed below to proof lanes with track width mine plow. Unit breaching SOP's/plans should indicate how the lanes will be proofed.

b. Offset Proof

(1) The first track width mine plow proofs one meter to the right side of the trough created by the linecharge. The skip zone between the plows of the first proofed lane is proofed by a second plow producing a full width proofed lane. This lane is tight for subsequent vehicles to negotiate so a third proofing vehicle can be used to make the lane wider when time permits.

(2) This method allows an additional lane to be created on the left side of the trough. Additionally, with this method, the depth of the plow can be controlled by keeping the left plow out of the trough created by the linecharge. If the left side of the plow goes into the trough the right side will raise up allowing an unplowed/unproofed area.

(3) This method should be used when troughs are deep (greater than 4-6 inches) and follow on lanes must be created quickly.

(4) This method takes more time than the centerline proof and should be conducted when enemy fire is well suppressed.

NOTE: OFFSET PROOFING IS TIME CONSUMING AND NOT ALWAYS EFFECTIVE. (DEPENDENT ON SOILS AND MINE TYPES ENCOUNTERED.)

c. Centerline Proof

(1) With this method, the track width mine plow drives directly over the linecharge trough. A second proofing tank offsets to the right to expand the lane by about 1/2 of a track width mine plow.

(2) This method allows proofing to be conducted faster than the offset method but should only be used if the trough is shallow and fairly straight.

(3) Follow on lanes cannot be made as quickly with this method.

d. If the offset or Centerline methods can not be done because of time and difficulty, making several separate lanes is an alternative.

(1) With this method, subsequent vehicles will follow the one path cleared by the plow(s). When the lane(s) become rutted and too deep, additional separate lanes are created by other plows.

(2) Consideration must be given to the restrictions of a single track width lane and that subsequent vehicles could eventually "belly out". Also, as more lanes are created, they get further away from the lane created by the line charge and are more vulnerable to mines.

11. PROOFING WITH DOZERS OR THE M9 ACE

a. As mentioned previously, proofing with the D7G Dozer or M9 ACE is to be used as a last resort and it is strongly recommend not to use them for proofing. These types of vehicles are not effective for minefield breaching or proofing because:

(1) It is difficult to control the depth of the blade, and as a result, mines that are dozed will roll or tumble in front of the blade along with accumulated soil. Mines can be easily activated in this situation if they go under the blade.

(2) Blades can only push dirt for short distances before it must back up and go around the accumulated dirt pile (and collected mines).

b. If these types of vehicles are used for proofing they should utilize the curved path or herringbone skimming technique. The operator makes multiple overlapping passes, stripping away about six inches of soil each time. The operator should skim no more than 15 meters at a time.

12. FIRING WITH MULTIPLE LINE CHARGES. When an encountered minefield is greater than 90-100 meters in depth, multiple linear charges must be used. This is accomplished as follows:

a. The first charge is fired from a distance of approximately 60 meters (200 feet) from the edge of the known minefield.

b. Once the charge has been detonated, the proofing vehicle will begin to proof. Begin proofing where the charge was fired from and advance forward the effective length of the charge (approx. 90-100 meters), using either the offset or centerline method. This will place the vehicle approx. 30 meters into the lane created by the line charge.

c. The second line charge will then be positioned immediately behind the first proofing vehicle and fired over the top of it. Once detonated, the initial proofing vehicle will again continue to proof.

13. EMERGENCY BREACHING AND PROOFING PROCEDURES FOR LINE CHARGE MALFUNCTIONS

a. Units must have "immediate action" plans in the event that the linear charge (MK 1 or MK 2 system) malfunctions or does not deploy properly.

b. Line charge deploys but will not fire remotely.

(1) Attempt to fire line charge at least twice.

(2) After attempting to fire twice electrically, disconnect wire from the control switch/box. Proceed down to the end of the line charge and dual prime, non-electrically, the second to last block of the linear charge (fuse end of the line charge). The length of time fuse used should allow the Marine enough time to reach a safe area prior to denotation. (2 to 3 minutes). If blocks of explosives (TNT or C4) are available, its recommended to have 2 blocks of TNT or C4 dual primed, non-electrically and place them on the linear charge vice attempting to create a cap well in the linear charge. The explosive used to INITIATE a "failed to detonate" line charge should be completely pre-primed.

WARNING: THE EXPLOSIVE OVER PRESSURE FROM AN EXPLODING LINE CHARGE TRAVELS PERPENDICULARLY AWAY FROM THE LINE CHARGE LINE. THE DANGER AREA IS GREATEST TO THE SIDES, OUT TO SEVERAL HUNDRED METERS. FRAGMENTS AND DEBRIS MAY BE BLOWN IN ANY DIRECTION, REQUIRING THE FIRING PARTY TO BE A SAFE DISTANCE AWAY OR INSIDE AN ARMORED VEHICLE TO THE REAR OF THE CHARGE. A TWO TO THREE (2-3) MINUTE TIME FUSE WILL ALLOW AMPLE TIME FOR THE FIRING PARTY TO TAKE COVER BACK AT THE ARMORED VEHICLE.

(3) A second method to employ when the line charge deploys but does not fire remote is to fire another line charge along the path and detonate that second one, creating a sympathetic detonation of the first charge.

c. Line charge will not deploy or deploys incorrectly: If the line charge does not deploy or deploys incorrectly, immediate action procedures must be taken to mechanically breach and proof a lane in the minefield It must be remembered that if the line charge veers left or right more than about 25 degrees off the desired breaching azimuth (outside of a 10 to 2 o'clock orientation), using that lane will provide the enemy a flanking shot to vehicles using the lane. Under these circumstances, the following procedures are employed:

(1) Conduct mechanical breach. This requires two plow tanks.

(a) Plow tank #1 breaches and proofs the initial lane.

(b) Plow tank #2 conducts a breach and proof to remove mines left between the inboard tines of the first plow.

(2) Conduct proof procedures (later) using a third plow tank.

(3) When FWMP is available, the breaching and proofing effort will be accomplished in one pass of the host vehicle.

14. MARKING

a. Marking of breached lanes is necessary to define the location and lateral limits of the breaching lane, and the minefield boundary. This activity is critical to the safe and swift movement of the force, particularly if the breached obstacle is under fire. As a minimum, the entrance and exit of safe lanes must be marked. When feasible, the sides of the lane should also be marked to prevent vehicle operators from straying into the minefield.

Temporary markings begin upon the completion of proofing and are improved using the standard markings systems as soon as the tactical situation permits. If adequate cover is available, personnel may act as guides at the entrance and exits of the safe lanes to ensure safe passage of vehicles. ALL UNITS NEED TO KNOW HOW LANES ARE MARKED as part of breaching procedures. Standard procedures must be part of Command SOP.

b. Equipment

(1) Cleared Lane Marking Systems (CLMS).

(a) The CLMS allows rapid, remote marking of the breached lane, which can be seen at night. CLMS marks centerlines only.

(b) It can be mounted on the rear of the M60 or M1 series tank.

NOTE: IF UTILIZED ON THE REAR OF AN M1 SERIES TANK A HEAT DEFLECTOR SHIELD MUST BE EMPLACED TO PROTECT THE CLMS FROM THE EXTREMELY HIGH TEMPERATURES GENERATED BY THIS VEHICLE.

(c) The lane marked using CLMS is only adequate for the initial assault and must be replaced and improved as soon as possible with a two-sided marking using standard marking kits or by unit standard operating procedures. **NOTE: THE CLMS IS NOT CURRENTLY IN THE USMC INVENTORY. DURING OPERATION DESERT STORM, THE CLMS WAS BORROWED FROM THE ARMY.**

(2) Pathfinder. (Planned To Be Fielded.) The Pathfinder is a mechanical marking system that marks the side of a lane. The Pathfinder can be mounted on either the tank or AAV.

(3) Minefield Marking Sets

(a) The standard minefield marking set and/or the Hand Emplaced Minefield Marking set (HEMMS) contain the equipment necessary to mark a safe passage 400m through a minefield.

(b) These sets should be used as soon as the tactical situation permits.

(4) Expedient Marking

(a) Expedients such as road flares, chemillums or engineer stakes w/eng. tape can be used to initially mark the centerline or flanks of the cleared lane.

(b) Engineer stakes, engineer tape, chemillums, and panel markers can be used to mark the entrance and exits and the lateral limits of the cleared lane.

NOTE: UNIT SOP SHOULD DICTATE WHAT SYSTEM(S) WILL BE USED.

c. Procedures

(1) Traffic priorities through the minefields are established in accordance with the operation plan (OPLAN). Although the priority is announced before the operation, the plan must be flexible enough to meet the critical situation. Arrangements must be made for rearward movement of casualties and supply vehicles. Traffic control points are staffed by military police (MP) and established at critical locations to control and direct traffic. Holding areas are dispersed as widely as possible to avoid presenting a concentrated target. Local security is established at the far end of each minefield lane to prevent enemy infiltration. Engineers clear, mark, and maintain vehicle lanes and switch routes. They mark the front and rear boundaries of minefields to prevent vehicles and personnel from straying into the mined areas, and they also assist with removing damaged vehicles from minefield lanes. Recovery vehicles should be available near lanes for this purpose.

(2) Well organized, efficient communications are essential for traffic control through minefields. When great distances are involved, the primary system of communication is by radio, supplemented by telephone and messenger. Traffic control through a minefield or obstacle system is similar to the control of traffic during a well-conducted river-crossing operation. FM 90-13 contains additional guidance on command and control for river crossing operations that may also be applied to minefield passage operations.

16. MANUAL TECHNIQUES

a. When advanced mechanical equipment is available, manual reduction procedures provide a backup to these systems. Manual obstacle reduction is also the only method which works in all situations and under all conditions. Some types of terrain, weather, and sophisticated fuzes can severely degrade the effectiveness of rollers, plows, and line charges. Engineers reducing obstacles manually use hand-emplaced explosives, grapnel hooks attached to ropes, probes, mine detectors, and hand-placed marking equipment.

b. Manual Reduction of Surface-Laid Minefield. Although the Threat does possess a significant mechanical mine burying capability, and have a capacity and propensity for the labor intensive effort required to hand-bury mines, they often surface lay their mines. Buried mines will usually be found in a more prepared defense requiring a deliberate breach operation. Training and execution of surface and buried minefield breaches should always assume the presence of antihandling devices and trip wires until proven otherwise.

c. From covered positions, the engineers first use grapnel hooks to check for trip wires in the desired lane. The limited range of the tossed hook requires the procedure to be repeated through the estimated depth of the obstacle. The demolition teams then move through the desired lane, placing blocks of explosives next to the surface-laid mines. A minimum of two pounds of TNT or C4 should be placed as close to the mine as possible without touching it. After the mines are blown, the team makes a visual check to ensure all of the mines were cleared before directing a proofing effort or other traffic through the lane.

d. A variation of this procedure is that the blocks of explosives are pre-primed with a fixed length of time fuse set for an SOP time, such as 5 minutes. The team moves through the surface-laid obstacle igniting the time fuse on the blocks of demolitions, setting it next to a surface-laid mine, when moving to the next mine. This procedure is much faster than the trunk line method, but does have drawbacks. A higher chance of misfire exists with individually primed demolitions. Possible injuries in the minefield containing initiated firing devices can defeat the closely timed breach, and detonations occurring at different times can possibly dislodge charges placed next to other mines.

e. Use this technique only when speed and mission necessitate such risks. The manual procedures, often called "manual breach battle drills" by the engineers who use them, must be extremely well practiced no matter what the details of technique are. Marines in the demolitions team are assigned special tasks such as grappler, detonating cord man, and demolitions man, but all of the engineers in the team should be cross-trained on all of the tasks of the procedure. Demolitions are prepared for use prior to arrival at the breach site. For clearing a lane for a company team, an engineer platoon will use squads in series through the minefield. The platoon must rehearse the reduction procedure until execution is flawless, quick, and technically safe. The engineer platoon will be exposed in the lane during this breach for 5 to 30 minutes or more depending on the mission, minefield depth and engineers level of training.

f. Manual Reduction of Buried Minefields. Manually reducing a buried minefield is extremely difficult to perform as part of a hasty breach operation and is usually part of a deliberate breach. If the burrows of the mines are not easily seen (as after moisture falls on a recently-buried and poorly-compacted hole), mine detectors and probes must be used to locate the mines. The mines are then destroyed by hand-emplaced charges as described above for surface-laid mines. As an alternative, the mines can be removed by use of a grappling hook (and tripod, if necessary).

g. The engineer platoon commander organizes his Marines into teams with distinct, rehearsed missions including grappling, detecting, marking, probing, and demolitions. The platoon conducting a manual reduction of a buried minefield will be exposed in the obstacle for long periods of time.

h. Grappling Hook (Grapnal). The grappling hook is a multi-purpose tool with important uses in manual obstacle reduction. Marines use this device to detonate mines from a stand-off position by activating trip wires and antihandling devices. After the grappling hook is used to clear the trip wires in a lane, dismounted engineers can move through the minefield, visually locate surface-laid mines, and prepare these mines for demolition. In buried minefields, Marines will grapple, then enter the minefield with mine detectors and probes.

i. A length of light rope (60 meters or more) is attached to the grapnel for hand throwing. The range for throwing the hook attached to a cord is usually no more than 25 meters. The excess rope is used for stand-off distance when the thrower begins grappling. The thrower tosses the hook and seeks cover before the grapnel and rope touch the ground in case their impact detonates a mine. He then moves rearward, reaches the end of the excess rope,

takes cover and begins grappling. Once the grapnel is recovered, the thrower moves forward to the original position, tosses the hook, and repeats the procedure at least two more times. He then moves to the end of the grappling area and repeats this sequence through the depth of the minefield. Multiple grapplers can more quickly and thoroughly clear a lane of trip wires, but they must time their efforts and follow the above procedures as simultaneously as possible.

j. A hit on a trip wire or pressure fuze may destroy the hook and cord. Engineers using this technique must carry extra hooks and cord.

17. OTHER MEANS OF BREACHING MINEFIELDS

a. Methods

(1) Artillery and mortar fire - utilizing a successive or rolling barrage to walk a lane through a minefield.

(2) Naval gunfire.

(3) Low altitude B-52 strikes.

(4) Fuel Air Explosives (FAE).

(5) Direct fire -heavy caliber organic weapons.

b. The philosophy of neutralizing mines through sympathetic detonation, (i.e. direct/ indirect fires), or overpressure (FAE) is feasible, however, due to the following reasons they are impractical. Therefore they are not recommended!

(1) Significantly decreases trafficability - craters created by the exploding munitions will not allow vehicular traffic without extensive engineer work. Craters also make proofing with plows impossible due to undulations in the ground.

(2) Inaccuracy of munitions delivery systems - does not provide an easily dentifiable path or lane to follow, and the accuracy of the breaching azimuth is greatly diminished.

(3) Numerous mine types and fuzing methods - blast resistant, or hardened, dual-impulse, and magnetically influenced mines are unaffected unless there is direct impact of the munition upon, or impact in extremely close proximity to the mines. This merely scatters unexploded mines about the area, increasing their sensitivity and creates an additional hazard for those tasked with clearing a lane.

(4) Dud Ammo - Rounds not detonating as desired will add to the minefield by the presence of sensitive fused mortar, artillery or air delivered munitions.

c. Prior to and throughout Operation Desert Shield/Storm various governmental agencies have conducted extensive testing on these methods and they have proven to be ineffective in breaching minefields. They are much

more effective in a supporting arms role, delivered as counter-battery fire, on enemy defensive positions, forward observers, assembly areas, avenues of approach, or as tactical denial of the battlefield and to provide obscurants. At present, our best available means for creating vehicle lanes through a minefield is a combination of explosive and mechanical breaching utilizing the full-width mine plow (when fielded) and the M-58 or M-59, Linear Demolition charge.

18. **BREACHING NONEXPLOSIVE OBSTACLES**

a. General. Nonexplosive obstacles are normally emplaced with mine fields to add to the complexity of an obstacle system. Some example are post obstacles, log cribs, and steel obstacles such as tetrahedrons. Though this lesson does not discuss the breaching of natural obstacles such as rivers, streams, wet lands, etc, the enemy may incorporate them into his complex obstacle system.

b. Breaching Antitank Ditches

(1) Towed Assault Bridge

(a) The 12 meter Towed Assault Bridge, is a Military Load Class (MLC) 70 bridge, emplaced by pushing or towing, and designed to breach man-made ditches and escarpments.

(b) It is effective in breaching ditches 3-10 meters in width with escarpments up to 4-5 meters in height.

(c) The TAB is an engineer item and is towed in the supported unit's combat train.

(d) When required for employment, in close proximity to mines, it is connected to the front of a tank (using tank adapter) and is pushed until launched over the antitank ditch. It also can be towed to the vicinity of the ditch and backed into the ditch when mines are not adjacent to the ditch.

(e) The TAB tow bar is equipped with a quick disconnect mechanism. The TAB can be emplaced in 30-60 seconds. If time and mission allow, the TAB can be retrieved from the gap and be reused in about 20 minutes.

(f) The TAB can sustain 2 antitank mine detonations and loss of 50% of its girders and still retain a class 70 rating. Even the loss of its wheels will not prevent its being pushed into place.

(2) Armored Vehicle Launched Bridge (AVLB)

(a) A scissor type bridge deployed from an M60 tank hull which is designed to breach Natural Gaps and destroyed bridges up to 17 meters in width.

(b) The AVLB is an MLC 60 bridge.

(c) The AVLB can be launched and emplaced by a 2 man crew in 2-5 minutes.

(d) Though not designed to breach antitank ditches with escarpments, it can be deployed by an experienced crew to breach an antitank ditch when no other assets are available. Some factors that must be considered when using the AVLB for breaching antitank ditches in a breaching operation are:

1 Tanks equipped with plows and rollers may exceed the MLC rating and must make a risk crossing.

2 Positioning the 17 meter bridge over a 3-8 meter ditch, with a 2-3 meter soil escarpment- especially at night or under smoke conditions may result in the bridge protruding across the spoil escarpment, like a "diving board". Tanks may literally drive off the bridge.

3 During launching, the AVLB presents a target approximately 11 meters high and four meters wide.

4 If the bridge is placed at an angle across the ditch, the AVLB may be bent (deflected). Once bent, the bridge may be unrepairable.

5 While moving to the ditch, the AVLB chassis may hit an unremoved mine in the breached lane and render this valuable asset useless.

(e) It is best to use the AVLB for what it was designed for.

(3) Fascines

(a) Fascines are large bundles of PVC type pipe loosely bound together and designed to be dropped into gaps by a launch vehicle to create a lane. The material used must have enough width and load-being capacity to handle the crossing traffic. Fascine systems are best used on ditches without escarpments.

(b) Expedient fascine systems can be constructed in the field. An expedient fascine system constructed during operation Desert Storm consisted of fascines mounted to the sides of an AAV. A cradle was designed to support the fascines. The cable that releases the fascines is cut by a small command detonated C4 explosive charge.

(c) One cautionary note. This method of employing expedient facines requires the host vehicle turning sideways to the enemy twice (one each side) to release its fascine bundles, creating two vulnerable "flank shots" on for the vehicle.

(d) As with other expedient systems, trial and error will prove its effectiveness

(4) Armored Combat Earth Mover (ACE), M9

(a) The M9 ACE is a highly mobile, armored earth moving system. It is lightly armored and has a chemical-biological overpressure system to protect the operator.
NOTE: ARMOR PROTECTS OPERATOR FROM SMALL ARMS. (7.62 mm ON THE FLANKS; 12.7 mm TO THE FRONT WHEN BOWL IS FILLED WITH EARTH.)

(b) The M9 ACE can scrape, doze, and haul material. It should primarily be used to construct survivability positions or reduce nonexplosive obstacles.

(c) The M9 ACE is also useful in mobility and countermobility efforts in support of mechanized forces. The M9 ACE is capable of removing obstacles such as road blocks, trees, and rubble while maintaining combat roads and trails.

(d) It can be used to breach antitank ditches and berms. It requires approximately 15 minutes to breach an antitank ditch.

(e) The M9 ACE is also useful in reducing shallow water non-explosive obstacles.

(5) D7G Dozer

(a) The D7G Dozer is a medium size tractor designed as a basic earthmover.

(b) Similar to that of the M9 ACE the D7G Dozer could be used to breach antitank ditches. Unless equipped with a tractor protection kit, the operator is not protected against small arms fire and fragmentation from indirect fires.

(c) The D7G Dozer requires transportation to the site, as it cannot maintain the speed normally associated with mechanized movements.

(6) Manual Antitank Ditch Breach

(a) The manual reduction of antitank ditches by dismounted troops is the slowest and most dangerous method. It is rarely desired because the working party is exposed to enemy direct and observed indirect fire and because explosive reduction of ditches is generally not effective.

(b) One method of manual breaching is an engineer squad obstacle clearing detachment) using hand tools such as shovels and picks and demolitions. The OCD uses satchel charges preconnected to detonating cord branch lines. They dismount as close to the ditch as possible and move to the ditch using dismounted movement techniques. On arrival, the team quickly digs four holes in the side walls (two in each side) near the ditch bottom for the satchel charges. The holes should be approximately 5 feet apart in each wall and directly opposite each other. After the holes are approximately 2 feet keep, the satchel charges are placed, connected to the prefabricated ring main, and tamped with loose earth. The squad leaves the ditch, takes cover, and detonates the charge. Then they manually cut down the remaining loose

soil as rapidly as possible to allow vehicles to pass.

c. Breaching Wire Obstacles

(1) Linear Demolition Charges

(a) The MK 1 or MK 2 Linear Demolition Charge systems as discussed in earlier are very effective in breaching wire obstacles.

(b) Line charges should be used when the wire obstacle is in conjunction with minefields, in great depth, or the risk of dismounted personnel is too great to use other techniques.

(c) Consideration must be given to employing this valuable asset on single/simple wire obstacles.

(2) Antipersonnel Obstacle Breaching System (APOBS)

(a) The APOBS, as discussed in chapter 2, was designed for the breaching of antipersonnel mines and wire obstacles by dismounted troops.

(b) The APOBS will create a 45 meter in length by 3-4 meters wide path in wire obstacles and .6 meters by 45 meters through AP minefield giving the troops a 25 meter standoff from the obstacle

(3) Bangalore Torpedo

(a) The bangalore torpedo, as discussed in chapter 2 will create a path 3-4 meters wide in wire obstacles.

(b) Caution must be given when pushing the bangalore through the wire obstacle because it may be booby trapped. A dummy or inert section should always be utilized.

(c) Normally the bangalore torpedo is primed non-electrically since electric firing systems are too complex and time consuming to use in an assault breach. Because the bangalore torpedo throws lethal fragments of wire for long distances, the breach team must ensure that all personnel within range have sought cover before the detonation.

d. Breaching Timber Obstacles. Heavily wooded areas provide an effective obstacle to vehicular movement. Log obstacles, such as abatis across roads and trails and earth filled cribs can further decrease trafficability.

(1) Earth Filled Log Cribs

(a) The 83mm Shoulder Launched MultiPurpose Assault Weapon (SMAW) can be used by firing low at the center of the mass. Then a M9 ACE, or D-7 Dozer pushes the remaining debris from the breached lane. (Figure 3-7)

(b) Dismounted troops can manually reduce the log crib by the use of explosives. Forty pound cratering charges are placed in the center of the crib at 2/3 the depth and tamped. Charges are placed on 8 foot centers

across the length of the crib.

(c) If under enemy control or fire, log cribs can also be severely damaged by the main gun of the tank.

(2) Abatis

(a) The removal and clearance of log abatis depends on the characteristics of the fallen trees and the total depth of the timber obstacle. An abatis consisting of only several trees or trees of small diameter can generally be forced through with a dozer's pushing effort.

(b) When this is not possible, a combination of manual or explosive breaching and mechanical force is recommended. First the fallen trunk of the tree should be separated from its base with saws or explosive charges. The remaining timber is then pushed by an ACE or dozer or winched from the roadway.

(3) Log Post Obstacle

(a) Log Post Obstacles consisting of small diameter trees or posts can be generally forced through with a mechanical pushing effort.

(b) If this is not possible, saws or explosive charges should be used.

(c) The following formula should be used for cutting trees, piles, posts, beams or other timber with explosives as an untampered external charge:

$$P = \frac{D}{40} \quad \text{or} \quad P = .025\ D^2$$

P = Pounds of TNT required

D = Diameter of round timber, or least dimension of dressed timber, in inches.

40 or .025 constant

Charges are placed as close as possible to the surface of the timber and at ground level.

e. <u>Low Water and Beach Obstacles</u>

(1) As an amphibious assault force, one of the Corps' primary missions as part of an amphibious task force will be to assault over beaches employing landing ships, landing craft, and amphibious vehicles in order to seize, occupy, and defend a beachhead in the amphibious objective area (AOA).

(2) A major deterrent which must be overcome in order to ensure a successful amphibious assault operation is the reduction of all obstacles (natural or man-made) throughout the AOA. Navy support elements are responsible for tasks associated with ship-to-shore movement in support of amphibious operations. Current Navy/Marine Corps doctrine dictates that the Navy has the responsibility of obstacle reduction from the high water mark seaward. The Commander of the Amphibious Task Force (CAFT) may assign naval

personnel, primarily SEALS or Under Water Demolition Teams (UDT), to neutralize obstacles in shallower water or the surf zone.

(3) Landing force preparation of the beach area initially includes the breaching of minefields and other obstacles from the high water mark, inland. Engineer elements of the landing force breach initial lanes utilizing explosive, mechanical, and manual means to allow the passage of the assault force and prepare the beach area to support the scope of operations. This eases the landing and movement ashore of the Ground Combat Element. Upon reaching the beach the landing team will deploy according to the deliberate combined arms breaching doctrine discussed previously. The question this poses is how we as engineers breach obstacles in the surf zone? Before we answer this, let's examine threat doctrine for the defense against amphibious operations.

(a) Threat doctrine emphasizes four principles for the defense of the beach. They are:

1 Engagement of the ATF and landing forces at the maximum possible weapons range.

2 Provide for dense overlapping sectors of fire in the beach area.

3 Extensive use of obstacles and barriers both underwater and surface types.

4 Use of back beach area for maneuver elements to rapidly respond to assaulting forces.

(4) Obstacle employment: normally constructed in three belts utilizing explosive and non-explosive obstacles.

(a) First belt: 5-15 meters in water depth.

1. naval mines.

2. antisubmarine nets.

3. large sunken craft.

(b) Second belt: 5-1.5 meters in water depth, designed to slow down or stop amphibious vehicles, tanks, and personnel in the surf.

1. concrete blocks.

2. metal hedgehogs or tetrahedrons.

3. inverted logs.

4. barbed wire entanglements.

(c) Third belt: 1.5 meters deep - inland as appropriate to support the enemies defense.

1. A.P. and A.T. mines.

2. barbed wire entanglements.

3. various log, concrete and steel barriers.

4. antitank ditches.

(5) Bangalore torpedoes can be used to destroy submerged obstacles and sandbars. The MK 1 (3 shot AAV) line charge can also be used to destroy these type obstacles.

(6) Floating obstacles should be reduced by destroying the anchorage only, allowing the obstacle to float or be hauled down stream. When possible, the obstacle may be removed by sinking it in place.

(7) Although our doctrine contained in FMFM-1 seeks the avoidance of such heavily defended areas, there are times when a forcible entry by amphibious assault is necessary. From this combination of obstacles and integrated fire plan we can see that this would be a formidable task to breach from the sea. As is the case in a combined arms deliberate breach, the fundamentals of SOSR, massing of combat power, sychronization, and the utilization of all direct/indirect fires available to the commander, also apply in an amphibious assault.

(8) Currently under testing are several systems which will enable us a greater counter-obstacle capability in the shallow water. At present our best hope lies with the M59/MK-154 3-shot line charge and a TWMP for the AAV. Proven to be effective on land, further testing is necessary to validate its effectiveness in the surf. Until such a time that these systems have proven reliable and are adopted into the Corps' inventory we must rely on our proven, time-tested, MAGTF doctrine and the innovation of the engineers.

19. **ROUTE CLEARANCE**

a. **Mine Sweep Operations**. Organizing a sweep team will vary according to the mission. There are three types of mine sweep operations: deliberate, hasty, and combination.

(1) Deliberate sweep. A delaberate sweep includes a complete electronic and visual sweep on the entire road to include the shoulders, all culverts, ditches, and bridges. A proper deliberate sweep is thorough. The sweep is made before the road is open to traffic. There is no time limit set. An average of one to three kilometers can be covered in one hour during a deliberate sweep.

(2) Hasty sweep. A hasty sweep consists of both visual inspection and search, and the use of mine detectors. Inspect and search the road surface, culverts, ditches, and bridges. Look for mines, wire, or any other signs of recent mining activity, such as disturbed earth and obstacles. Use electronic detectors to check all suspected areas. Use a hasty sweep when the mission does not permit a deliberate sweep or the road urgently needs to be opened. Time / distance factors may be imposed. An average of three to five kilometers can be covered in one hour during a hasty sweep. Remember that

when conducting a hasty sweep there is greater danger of bypassing a well-emplaced mine or other explosive device.

(3) Combination sweep. A combination sweep consists of a hasty sweep with a deliberate sweep made on selected parts of the route where there is high likelihood of enemy mining. The time / distance factors are determined by the amount of deliberate sweep conducted.

b. Organization and Equipment of a Sweep Team. A sweep team is a trained detection team which does the actual search for mines and explosive devices. The length and difficulty of the road to be swept. Typical organization and equipment for a sweep teams is as follows:

(1) Organization

* NCOIC
* Two detector operators/probers
* Four probers/detector operators
* One radio operator
* One corpsman
* Two demolition men
* Vehicle drivers

(2) Equipment

* One panel marker
* One map
* Four smoke grenades, minimum
* Four detectors (includes two back up detectors) and extra batteries
* Two grappling hooks with 60 meters of rope.
* One demolition kit or demolition bag per demo man.
* Four probes
* Two proof vehicles (sandbagged and loaded with earth)

(3) Security Element. A security element is an escort for the sweep teams that provides security against the enemy. The composition of the security element is dictated by the tactical situation. The enemy often mines or re-mines areas recently cleared by sweep teams. Rear security elements must be alert to this technique and be prepared to react.

(4) Emergency situations. If a mine-sweep team is attacked, immediate action must be taken to deploy the men into cleared areas and return fire. Normally the security element will assume command on enemy attack. The commander of the security element will organize the defense or counterattack and request support as needed.

c. Typical mine locations. Experience has shown that enemy mines are likely to be placed in the following locations:

(1) Frequently used roadways leading to and from construction sites.

(2) Brush and other traffic obstructions placed on roadways.

(3) Bridge bypasses.

(4) Obvious turnarounds and shoulders.

(5) The enemy normally places more than one mine in each mined area.

d. Conduct of Mine-sweep Search. Organization of a sweep team will vary, depending on the mission. For route clearing, the normal configuration is eight Marines in a column:

(1) The number one Marine (mine detector operator) leads. Approximately 25 meters (34 paces) to the rear are the number two Marine (marker/prober) and the number three Marine (NCOIC). Twenty five meters to their rear are the number four and five Marines (demolition team). Number six (relief mine detector operator) and number seven Marine (radio operator) are 25 meters behind the demolition team. The number eight Marine follows and serves as rear security.

(2) If the sweep team is assigned the mission of clearing an entire minefield rather than a single lane or a road, it is organized with several detector operators working in echelon, spaced 25 meters behind each other. This configuration would decrease the amount of time required to clear the area.

(3) The actual distance between team members and the location of the security element will depend on the tactical situation, terrain, and visibility.

(4) Experience has shown that a number of detection methods used together make the most effective sweep. These methods include:

(a) Visual detection.

(b) Electronic mine detectors.

(c) Probing. This is done by protruding the earth with a sharp instrument such as a pointed stake made of wood or plastic probes. All jewelry is removed, sleeves are rolled up, palm placed at a 45 degree angle or less. Probe every 2 inches on a one meter front.

(d) Proof rollers. Tank rollers may be used as a final check. The rollers are designed to defeat most antitank and antipersonnel mines which are single impulse, pressure activated.

e. Disposition of Suspected Mines. The following actions will be taken by the sweep team when a suspected mine is found.

(1) Pinpoint and mark the location of the mine. Leave no mine unmarked.

(2) Search the immediate area for wire. Trace any wires found in both directions to determine if any electric current producing items are attached. Once this procedure has been accomplished and there are no items attached, have the prober cut all loose trip wires.
NOTE: NEVER CUT TAUGHT TRIP WIRES. ALERT THE SECURITY ELEMENT TO SEARCH FOR AN ENEMY MANNING A COMMAND DETONATED MINE. KEEP ALL TROOPS AWAY FROM THE MINE UNTIL ALL WIRES ARE CUT AND TRACED OUT. MEN DOING THE CUTTING AND TRACING MUST BE ALERT FOR BOOBY TRAPS AND AMBUSH.

(3) Probe to the suspected location and uncover the object for identification. Expose enough of the object to see whether it is a mine or debris. All other men stay at least 25 meters away while this is being done.

(4) If the object is debris, carefully remove it with grappling hooks and rope from a protected position. Be alert for booby traps or antihandling devices wired to the debris.

(5) If the object is a mine, the prober withdraws and notifies the OIC who decides whether to:

(a) Destroy the mine in place.

(b) Remove the mine with grappling hook and rope.

(c) Notify EOD for hand removal (this action is seldom taken).

f. Safety Precautions

(1) All sweep team members wear helmets and flak jackets to protect them against fragmentation.

(2) Sandbag the floorboards of all vehicles taking part in a mine sweep.

(3) While enroute to and from a mine sweep area, disperse vehicles. Minimum intervals should be 50 meters. If a mine is set off by any one vehicle, it will not cause personnel casualties in any other vehicle.

(4) Allow only one person to be at the location of a suspected mine at any time.

(5) Assume that all mines and explosive devices are equipped with antihandling devices until proven otherwise.

(6) Caution all troops in the area not to run and to move only in areas previously cleared.

g. Mine Removal Techniques

(1) After a mine has been located, it may be clearly marked and bypassed, detonated in place, pulled out by rope or wire, or neutralized and removed by hand. The decision as to which of these methods to employ depends upon the location of the mine, the identity of the mine and fuze, and the tactical situation.

(2) Detonation in place may be accomplished by several methods:

(a) Trip wire and tilt-rod fuzed mines can be detonated by throwing a grapnel with a rope attached past the trip wire or tilt rods and pulling it back to actuate the mine. Grapnels may be improvised from any available material such as a bent drift pin or scrap. A 60 meter length of rope is attached to the grapnel for hand throwing. Cover should be sought before the grapnel and rope touch the ground in the event their impact detonates a mine.

(b) A one-pound block of explosive placed next to the mine is sufficient to detonate the mine. A group of charges placed next to the mines may be connected with detonating cord and fired simultaneously.

(3) Removal by rope or wire is accomplished by pulling mines out of their installed position. This eliminates the potential hazard to mine clearing personnel for mines fitted with antihandling devices. This method requires uncovering as much of the mine as necessary to expose the handle or other projection to which a rope or wire may be tied or a grapnel engaged. Care must be taken while uncovering or attaching a wire or rope not to move the mine which might activate the antihandling device. This method is safe and only detonates those mines equipped with antihandling devices, thus reducing noise and cratering. An expedient A-frame can assist in pulling the mine out of the hole with ease on the first attempt. The procedures for rope removal of mines is as follows:

(a) Uncover only enough of the mine to expose a suitable part. A 60-meter- long rope or wire is tied to the mine or a grapnel is engaged without disturbing it. If there is no such projection, engage a hook of the grapnel under the bottom side of the mine opposite the direction of pull.

(b) After ensuring that the area to be used for cover is not mined, take cover or lie in a prone position at least 50 meters from the mine and pull it from the hole.

(c) Wait 30 seconds before leaving cover and approaching the mine to guard against the possibility of a delay-firing mechanism if the mine type is unknown.

(4) Hand neutralization. Foreign mines and booby traps should only be neutralized by EOD personnel. Mines are neutralized by hand in the following unique circumstances:

(a) When a silent breach of a mined area is a tactical necessity.

(b) When the mine is located on a bridge, building, or other facility required for use by friendly forces.

(c) When the mine is positively known to be one which can be hand neutralized and is required for reuse.

(d) When the mine is of an unknown type and its recovery for intelligence purposes must be attempted.

(e) When chemical mines are located in areas where subsequent contamination would restrict the use of the area by friendly troops.

h. Reports. There are three types of reports that the NCOIC of the sweep team must submit:

(1) Spot report. The spot report is sent to the higher headquarters when any enemy mine or explosive device is discovered or detonated. A spot report will be made on any enemy activity in the mine-sweep area.

(2) Status of progress and completion report. These reports are sent until the sweep team has completed the sweep of the road. Progress reports must be timely and accurate for two reasons: to permit effective movement by a reacting force if needed and to speed notification to the parent unit of road clearance.

(3) Mine booby trap incident report. This report is given to the commander so that each mine and booby trap incident is documented. These reports are forwarded through intelligence channels at the end of the mine-sweep operation.

(4) The post-operation procedure is a critique of the operation to discuss unsafe acts or possible improvements to the operation.

i. Equipment. Equipment used in the mine sweep should be cared for. Actions to be taken include:

(1) Immediate repair or turn-in for repair all damaged or malfunctioning equipment.

(2) Maintain and frequently check mine detectors for proper operation.

(3) Safely store demolitions and blasting caps.

REFERENCE(S):

FM	5-25	Explosives and Demolations
FM	5-101	Mobility
FM	90-13-1	Cominbined Arms Breaching Operations
FM	20-32	Mine/Countermines Operations