UNITED STATES MARINE CORPS
Utilities Instruction Company
Marine Corps Engineer School
PSC Box 20069
Camp Lejeune, North Carolina 28542-0069

U-05C07
OCT 99

STUDENT HANDOUT

WATER DISTRIBUTION SYSTEMS

1. **LEARNING OBJECTIVES**

a. **Terminal Learning Objective:** Provided a mission, a utilities site reconnaissance report, and the reference, plan a water distribution system. The water distribution will be planned so that it will provide water for the number of personnel and facilities per the reference FM 10-52-1, TM 5-4320-303-10, TM 08922A-14/1, TM 09444A/08990A-15.. (1169.04.25)

b. **Enabling Learning Objectives:**

(1) Given an operation order, camp layout, T/E and T/O, with the aid of references, while conducting a military brief, orally explain the distribution system requirements needed to support the operation plan in accordance with FM 10-52-1, TM 5-4320-303-10, TM 08922A-14/1, TM 09444A/08990A-15. (1169.04.25a)

(2) Given an operation order, camp layout, T/E and T/O, with the aid of references, list in writing the quantity of distribution systems required to support the operation plan in accordance with FM 10-52-1, TM 5-4320-303-10, TM 08922A-14/1, TM 09444A/08990A-15. (1169.04.25b)

(3) Given an operation order, camp layout, T/E and T/O, with the aid of references, list in writing the amount of personnel required to operate the distribution systems to support the operation plan in accordance with FM 10-52-1, TM 5-4320-303-10, TM 08922A-14/1, TM 09444A/08990A-15. (1169.04.25c).

(4) Given an operation order, camp layout, T/E and T/O, with the aid of references, list in writing the support requirements for distribution systems to support the operation plan in accordance with FM 10-52-1, TM 5-4320-303-10, TM 08922A-14/1, TM 09444A/08990A-15. (1169.04.25d)

(5) Given an operation order, camp layout, T/E and T/O, with the aid of references, list in writing the safety precautions required for distribution system to support the operation plan in accordance

with FM 10-52-1, TM 5-4320-303-10, TM 08922A-14/1, TM 09444A/08990A-15. (1169.04.25e)

(6) Given an operation order, camp layout, T/E and T/O, with the aid of references, list in writing the task requirements for the distribution systems to support the operation plan in accordance with FM 10-52-1, TM 5-4320-303-10, TM 08922A-14/1, TM 09444A/08990A-15. (1169.04.25f)

BODY

1. **The Military Water Supply Support Systems:** Is designed to provide flexible and responsive water support, the Marine Corps has developed a family of water supply support systems. Each system is designed and configured specifically to support a unique mission using similar components. The ability to alter fundamental system configurations and interchangeable components allows the creation of limitless combinations of tailored systems to meet mission requirements. The family of water supply support systems consists of 22 TAMCN's.

TAMCN	NOMENCLATURE		
B1332	WATER TANK CHEST	B2137	TANK ACCESSORY KIT
B1571	500-GAL DRUM	B2138	350 GPM PUMP CONNECTION KIT
B1676	FAWPSS	B2139	125 GPM PUMP CONNECTION KIT
B1140	HYPOCHLORINATION UNIT	B2391	PUMP STATION
B1582	350 GPM PUMP	B2392	STORAGE ASSEMBLY
B2131	DUAL TANK CONNECTION KIT	B2393	DISTRIBUTION POINT
B2132	BAG FILLER CONNECTION KIT	B2394	600 GPM PUMP
B2133	″4″ HOSE CONNECTION KIT	B2395	10 MILE SEGMENT
B2134	″2″ HOSE CONNECTION KIT	B2396	HOSE ASSEMBLY
B2135	″4″ DISCHARGE HOSE INNER-CONNECTION KIT	B2631	50K STORAGE TANK
B2136	HOSE NOZZLE CONNECTION KIT	B2632	20K STORAGE TANK

2. **Tactical Water Distribution Sysyem (T.W.D.S.):** The TWDS is designed to receive water from large storage and distribution units, water purification units or additional TWDS. The TWDS transports this water to small distribution points, additional TWDS, or large storage and distribution units.

a. Capabilities: The TWDS is capable of transporting water at 600 GPM across level terrain or a total of 864,000 gallons of water in a 24hr period.

(1) The TWDS can be deployed and operational within 48Hrs.

(2) The TWDS is not designed to be used at Temperatures below 32 deg. F., or used with brackish or contaminated water.

b. Components: The system consists of six (6) pumping stations, two (2) storage assemblies, two (2) distribution points and a 10-mile hose line segment. All of these components are grouped into four categories.

(1) Group 1 Pumping stations: Each pumping station consists of a 600 GPM trailer-mounted pump assembly, a check valve, butterfly valves, and several 6-in. diameter hose assemblies. Pumps can be used as either lead or boost pump station.

(a) Lead Pumping Station: Draws water from a large storage and distribution unit that is supplied by the water purification equipment. Feeds water down line through the hose line to first boost pumping station, which can be operated in manual or automatic modes. Flow of water through the unit is controlled by manually operating butterfly valves on suction and discharge hoses. Adjusting engine speed regulates the PSI.

(NOTE: TO PREVENT DAMAGE TO PUMP, MAKE SURE ARROW ON CHECK VALVE POINTS AWAY FROM PUMP.)

(b) Boost Pumping Stations: Draws water from the hose line and feeds it down line to the next boost pumping station or storage assembly. After initial startup, boost pumps can be switched to electric automatic mode. Engine speed will be regulated automatically. If pumping station fails, water can be routed through the bypass hose assembly to keep down line pumps primed. Flow of water is controlled by manually operating on-line butterfly valves. Adjusting engine speed regulates PSI.

(NOTE: TO PREVENT DAMAGE TO TWDS COMPONENTS DO NOT ALLOW WATER PRESSURE TO EXCEED 225 PSIG.)

(2) Group 2 Storage Assemblies: Consist of a 20,000 gallon, collapsible, rubberized nylon, pillow tank used to supply TWDS distribution point or water storage. Tank fill rate is controlled by manually operating gate valve.

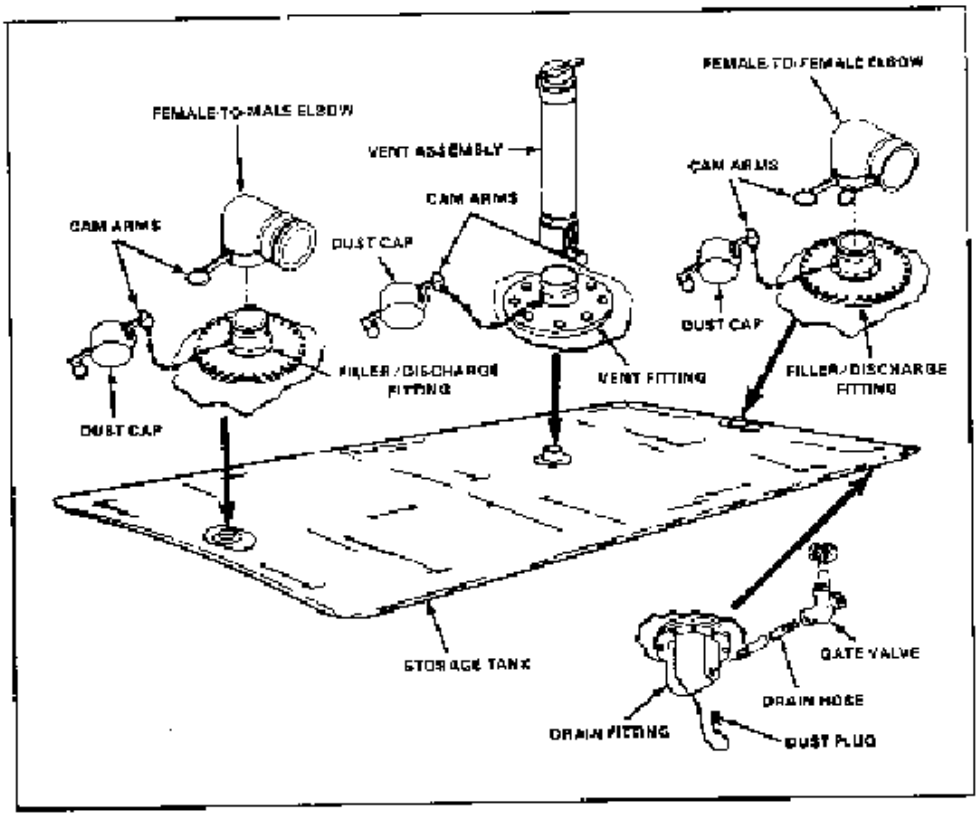

Collapsable fabric tank and assemblies

(3) Group 3 Distribution Points: Each distribution point is made up of a 125-gpm pump, hypochlorination unit, and a network of hoses. Water is then routed through a network of hoses to manual disbursing stations for distribution to personnel.

(a) 125 GPM Pump Assembly - The 125 GPM pumping assembly is skid mounted, diesel engine driven pump which is manually controlled. It is used to pump water from the 20,000 tank to the hypochlorination unit and water dispensing devices.

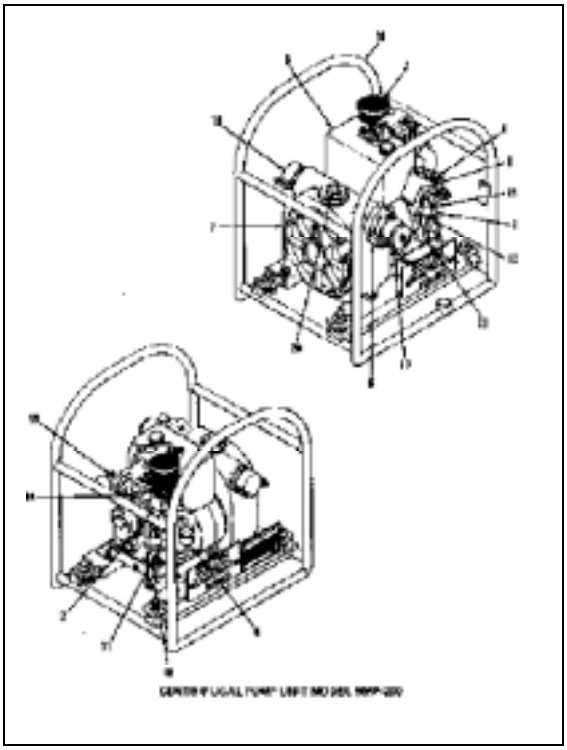

(b) Hypochlorination Unit

1 CHARACTERISTICS: Portable, frame mounted. Uses water pressure as a power source. Used to inject chlorine into the water supply at a steady rate.

2 CAPABILITIES AND FEATURES:

a Chlorinates water flow rate from 2 – 350 gallons per minute.

b Feeds Hypochlorite solution in direct proportion to water flow.

c A proper chlorine dosage will be injected into the water regardless of the water flow rate.

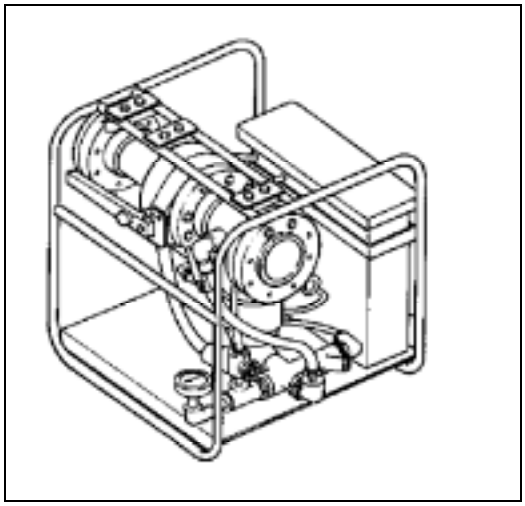

(NOTE: DO NOT ALLOW CALCIUM HYPOCHLORITE TO MIX WITH ANY OTHER MATERIALS, SUCH AS FUELS OR OILS THIS COULD CAUSE A FIRE OR HAZARDOUS GASES.)

(c) HOSE NETWORK AND MANUAL DISPERSING STATIONS:

1 The hose network is used to transport water from the 20,000-gallon water storage assembly to the 125 gpm pumping assembly, hypochlorination unit, and manual dispersing stations.

2 The hose network ends at four manual dispersing stations. Two manual dispersing stations are equipped with distribution nozzles and two with elbow valves.

a Nozzle stand assembly and Collapsible tripod provides a place to hang manual disbursing station hoses when they are not being used.

b Nozzles are used to fill 5-gallon cans, Canteens, and etc.

c Elbow valves are used to fill FAWPSS bags only.

3 Lister Bags: Up to four 36-gallon lister bags are suspended on tripods and fitted with faucets to provide water for hand washing, canteens and other smaller containers.

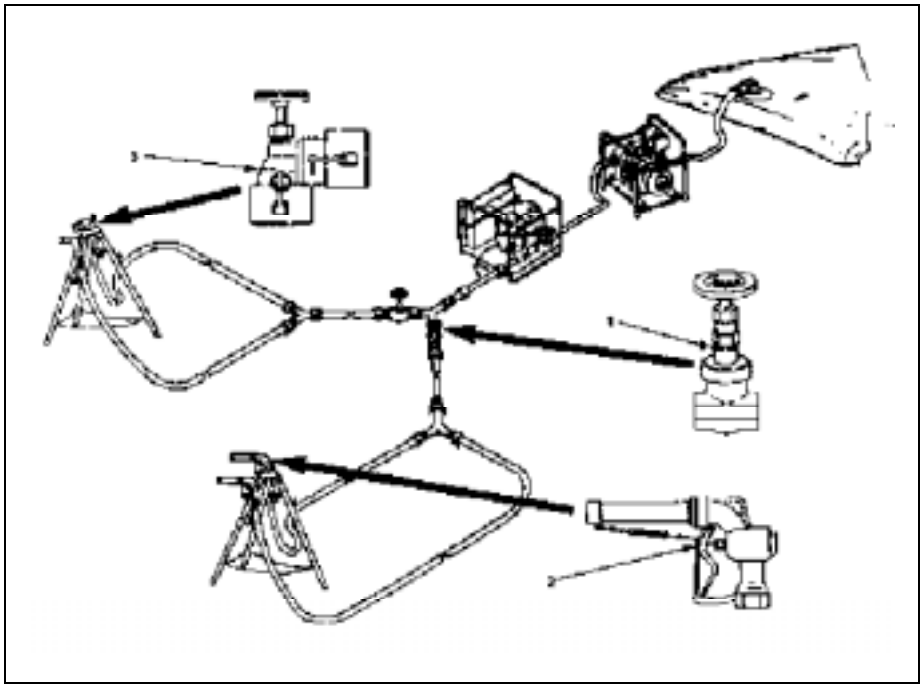

(NOTE: TRIPODS FOR LISTER BAGS MUST BE AT LEAST 6 FT TALL AND CAPABLE OF SUPPORTING 400 LBS.)

d. Group 4 10-Mile Hose line Segment: The 10-mile hose line segment consists of 128, 6 inch X 500-foot collapsible hose assemblies. The 10 mile hose line segment transfers water to the major components of the TWDS. This segment is used to connect pumping stations and storage assemblies. Suspension devices are used to route the 10-mile hose line segment over obstacles in terrain. A road crossing guard is used to protect hose segments from damage when the hose segments are buried under a roadbed. An end cap can be installed if dead-end service is required or the hose line can be coupled with an additional TWDS or Distribution and Storage Unit.

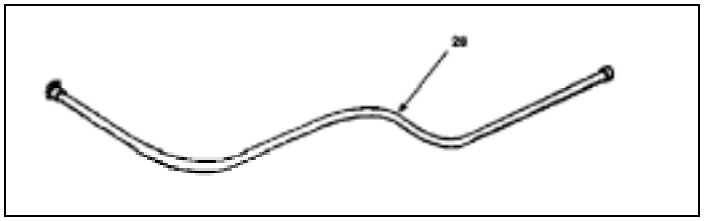

(1) Components: The 10-mile hose line segment is packed in 34 crates; thirty-two crates contain hose line and are marked HOSE ASSEMBLY, 6 INCH, 500 FEET. The other two crates are marked “10 MILE SEGMENT” and house all other required components to set up and install the TWDS.

(2) Flaking Boxes: Four flaking boxes make up one crate. Each box holds one 500-foot hose segment. Allows hose to be flaked from the back of a truck. Used in-groups of four boxes during hose line laying operation. Adapted for forklift or lifting sling.

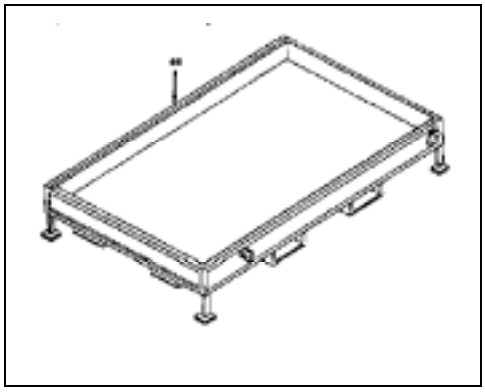

(3) 10-Mile Segment: The remaining crates are used for various purposes they contain:

(a) Lifting Sling. Used for lifting flaking boxes in the field when forklifts are not available. Capable of lifting a stack of four flaking boxes.

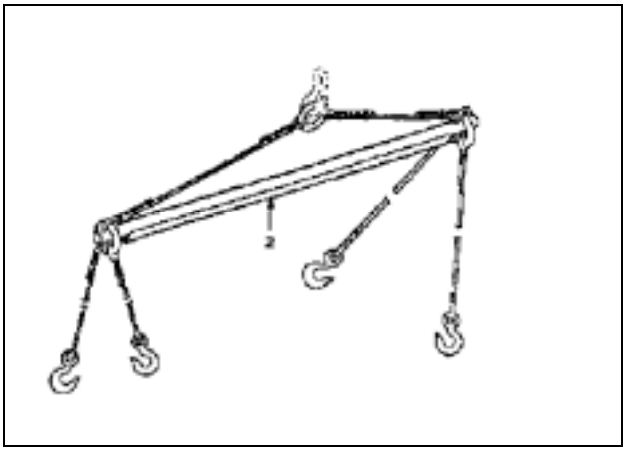

(NOTE: ENSURE FORKLIFT HAS AS LEAST A 6000 LB. CAPACITY.)

(b) Road Crossing Guards. Used when hose must be laid across a roadway or under a railroad bed. Capable of crossing 120 feet, contains twenty-four 5 foot sections.

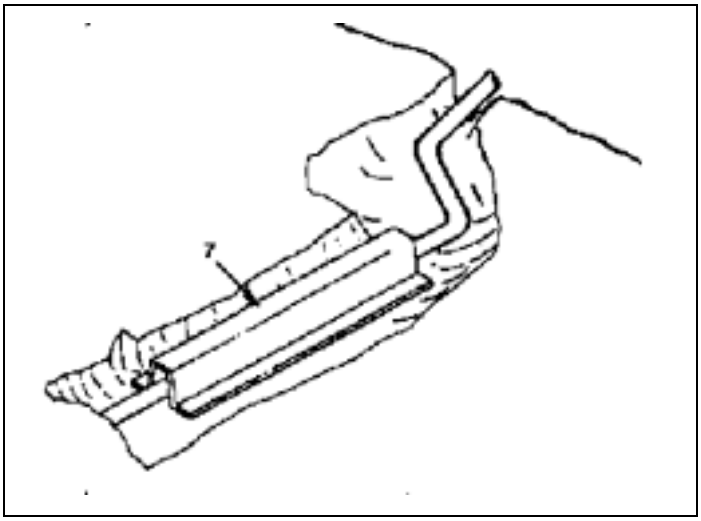

(c) Suspension Kit: Composed of five metal chests containing kits of materials for constructing suspensions across steams, ponds, or gullies. Each kit contains enough equipment to construct one suspension spanning 200 feet or two shorter spans.

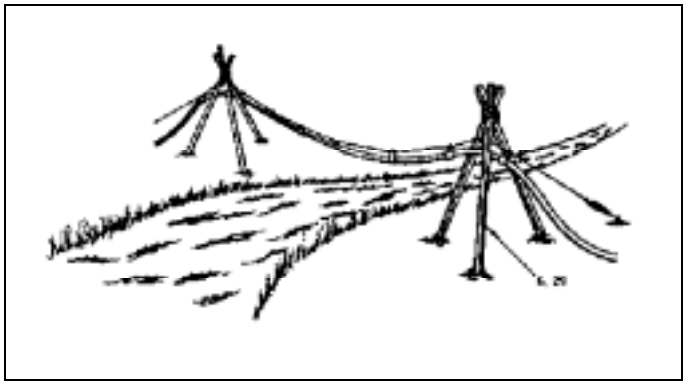

(d) Displacement and Evacuation Kit: Used to remove water and air from the hose line and 20k tanks prior to packing. An air compressor is required to operate the kit.

(e) Repair Kit. This kit includes enough adapters and couplings to make up to three hose repairs on the 6-inch hose assemblies.

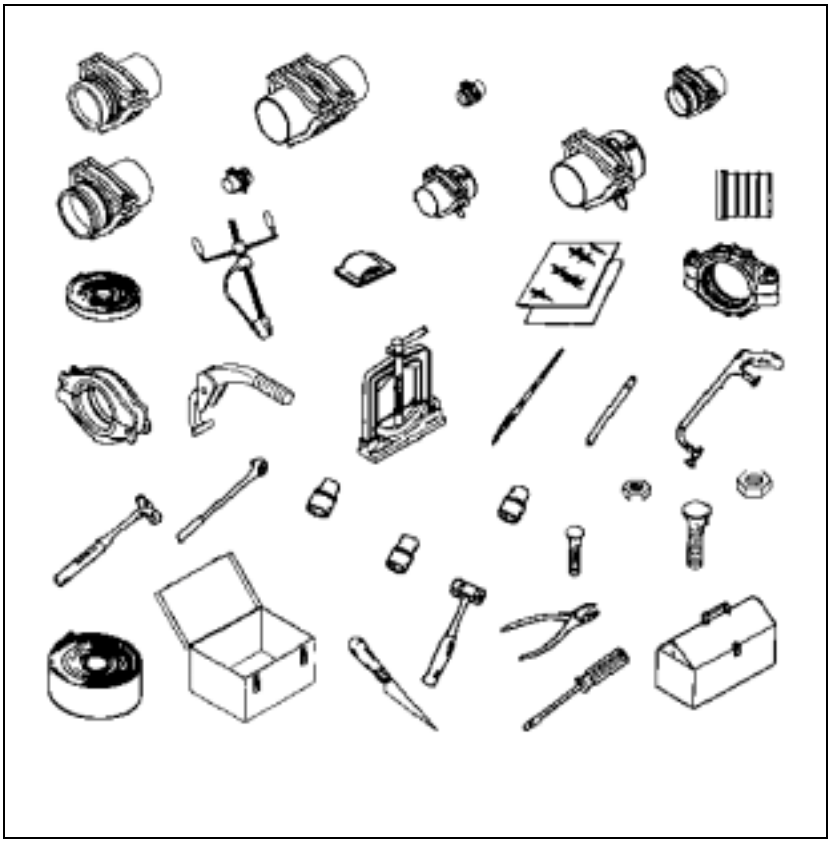

3. **Site Location:**

a. Prior to installing TWDS equipment, a thorough study of the terrain is required. A general route for hose line and general locations for the pumping stations, storage assemblies, and distribution points can be determined from examination and comparison of maps, photographs, and charts. Some elements to be considered in selecting a route and installation sites for TWDS are:

(1) Whether TWDS will operate independently or as part of a large system.

(2) The assigned mission for TWDS (i.e., dispensing, storing, or transferring water).

(3) Expected length of time TWDS will be required to operate.

(4) Elevation differences and distances TWDS will encounter along its route.

b. Organize a ground reconnaissance prior to installation of TWDS to determine exact locations for pumping stations, storage assemblies, and distribution points. If possible, site locations should be near or parallel to existing roads to ease transportation, assembly, inspection, maintenance, and disassembly of the system. Avoid routes along the banks of streams, marshes, ponds, gullies, ravines, or other

areas subject to flooding. Whenever possible, the hose line should be laid out on firm, dry, level ground that allows easy access and is not subject to flooding.

4. **Guide Lines for Installation:**

a. Route should be direct and present a minimum of obstacles and obstructions.

b. A route parallel to a secondary road is preferable to one along a heavily traveled road.

c. Select the route that best allows hose laying procedures.

d. Keep security precautions in mind.

e. Utilize natural camouflage.

f. Avoid routing hose through populated areas.

5. **Placement of Pumping Stations**:

a. Lead Pump: In selecting pumping station installation sites, the location of the lead or fist pumping station will be determined by the location of the water source.

b. Boost Pump: Boost pumping stations are intended to be spaced at **approximately** two mile intervals, assuming that the route is reasonably direct and the terrain is level. However, a substantial rise or fall in elevation along the hose line route may require adjustment of standard spacing intervals.

c. Adjustments to Spacing: When making Adjustments to spacing between pumping stations (due to elevation change) assure that water pressure will be maintained within optimum operational range under normal conditions. The TWDS will deliver water to the suction port of each boost pumping station at a pressure of 20 psig. Whenever suction pressure falls below 20 psig, boost-pumping stations are designed to begin reducing speed, when operated in the electric automatic mode. Therefore, if an upline pumping station is substantially lower than the next down line station, and the elevation difference has not been offset by spacing adjustment, suction pressure at the down line pumping station may fall below 20 psig and cause that pump to slow down. This in turn will cause remaining down line boost pumping stations to slow down, seriously degrading overall performance of TWDS.

(1) If the next down line pump station is substantially higher in elevation than the up-line pumping station, the distance between them must be decreased.

(2) If the next down line pump station is lower in elevation than the upline station, the distance between them must be increased.

d. Ground Profile Construction: To construct a ground profile, first obtain a topographical map or other source material providing accurate information concerning terrain along the projected hoseline route. Then, using this information, draw a ground profile of the hoseline route on graph paper as follows:

(1) Divide horizontal base of ground profile graph, into spaces that represent uniform distances, such as 1,000 foot intervals. However, **any suitable scale can be used.** The ground profile base represents the distance the hoseline will cross.

(2) Divide vertical, left-hand edge of ground profile graph into spaces that represent uniform changes in elevation, such as 100 feet intervals. Again, **any suitable scale can be used.** However, the scale must include at least the highest and lowest elevations along the hoseline route.

(3) At left-hand edge of ground profile graph, mark a point that represents lead pumping station elevation.

(4) Continue across ground profile graph, mark points where significant changes in elevation occur along hoseline route.

(5) To complete ground profile, join the points marked on the ground profile graph with a straight line.

GROUND PROFILE CHART

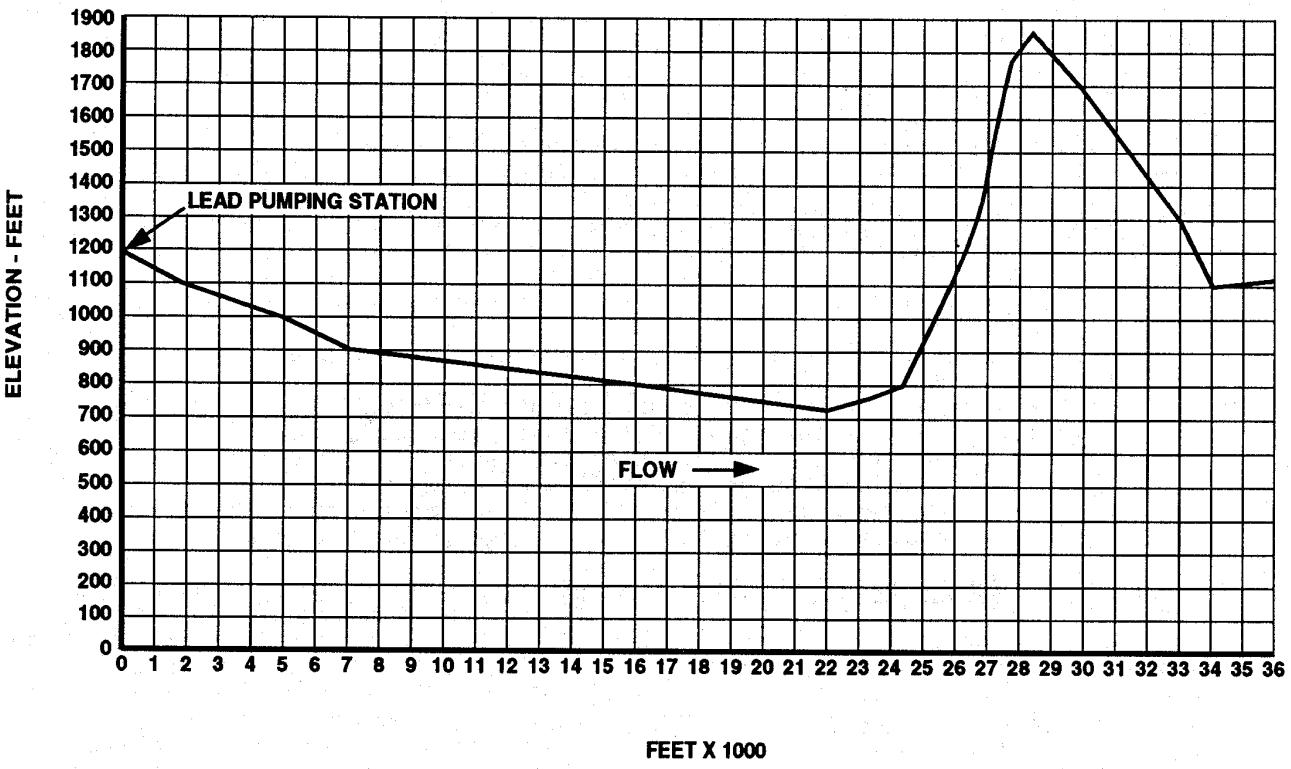

e. Pump Spacing triangle: To construct a spacing triangle, obtain a piece of paper, transparent sheet, or cardboard thick enough to be used as a straightedge. Then prepare the pump spacing triangle as follows:

(1) Divide horizontal base of pump spacing triangle, into spaces on the same uniform scale used to divide the ground profile graph base. Mark off spaces along pump spacing triangle base to at least 39,000 feet.

(2) Divide vertical, left-hand edge of pump spacing triangle into spaces on the same uniform scale used to represent elevation changes on ground profile graph. Mark off spaces along vertical side of pump spacing triangle as follows:

(a) Zero represents pumping station elevation.

(b) The upper left-hand corner represents 300 feet above pumping station.

(C) The lower left-hand corner represents 600 feet below pumping station.

(3) Draw a straight, diagonal line from the 300 feet mark on the vertical scale to the 39,000 feet mark on the horizontal scale. This line will form the hypotenuse or long side of the triangle.

(4) Make sure all lines have a straight edge, cut the triangle along the three sides drawn(horizontal, vertical, and diagonal).

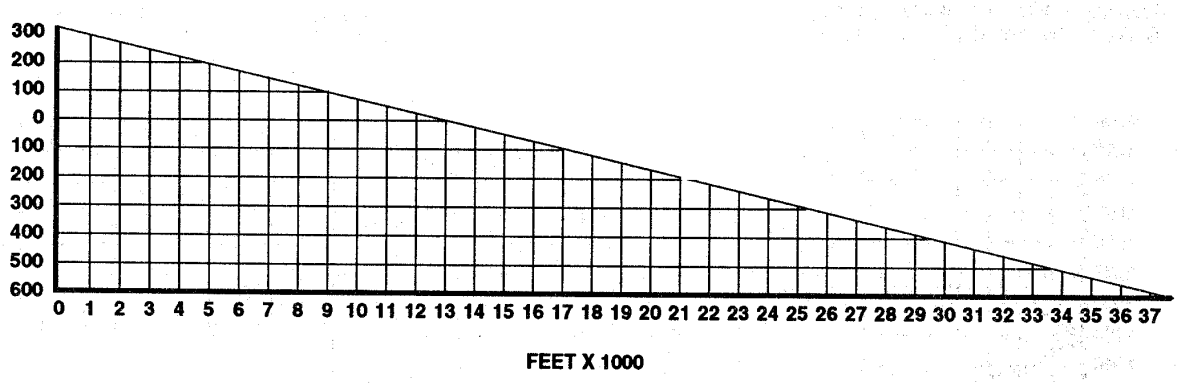

Figure 2-9. Pump Spacing Triangle.

f. Determining Location of first Boost Pump: Using a ground profile graph and a pump spacing triangle, refer to the chart and determine the first boost pumping station as follows:

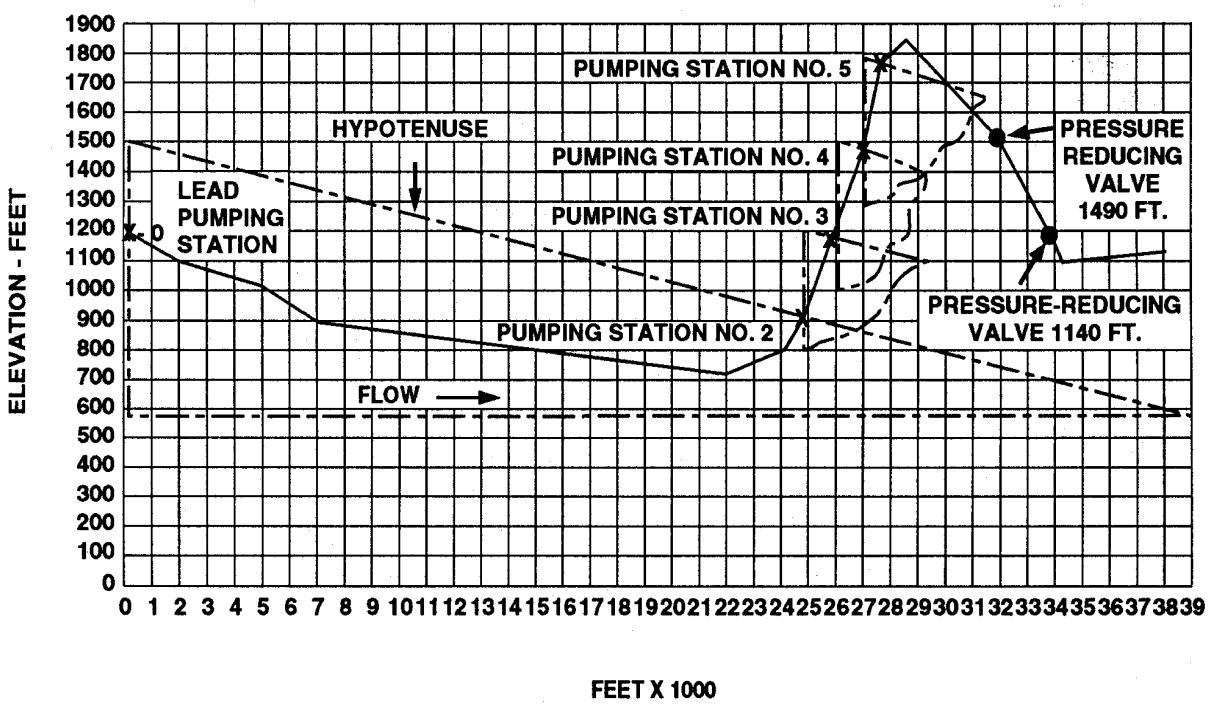

Figure 2-10. First Boost Pumping Station Location.

(1) Place pump spacing triangle on ground profile graph.

(2) Align vertical side of pump spacing triangle with vertical (elevation) side of ground profile graph. Ensure zero mark of pump spacing triangle is on the lead pumping station mark of the ground profile graph.

(3) Ensure horizontal side of spacing triangle is exactly parallel with horizontal base of ground profile graph. Horizontal space on both the pump spacing triangle and ground profile graph should be exactly aligned.

NOTE: If level of ground profile is below base of pump spacing triangle, extend pump spacing triangle hypotenuse line until it crosses the ground profile.

(4) Mark point at which the hypotenuse (long side of pump spacing triangle) crosses ground profile. This will be the first boost pumping station location.

g. Determine Location of Second Boost Pump Station: To determine the second boost pumping station location, place pump spacing triangle zero mark on the first boost pumping station mark on the ground profile graph. Mark the point at which pump spacing triangle hypotenuse crosses ground profile. This identifies second boost pumping station location. Locations of successive boost pumping stations are determined using the same procedure.

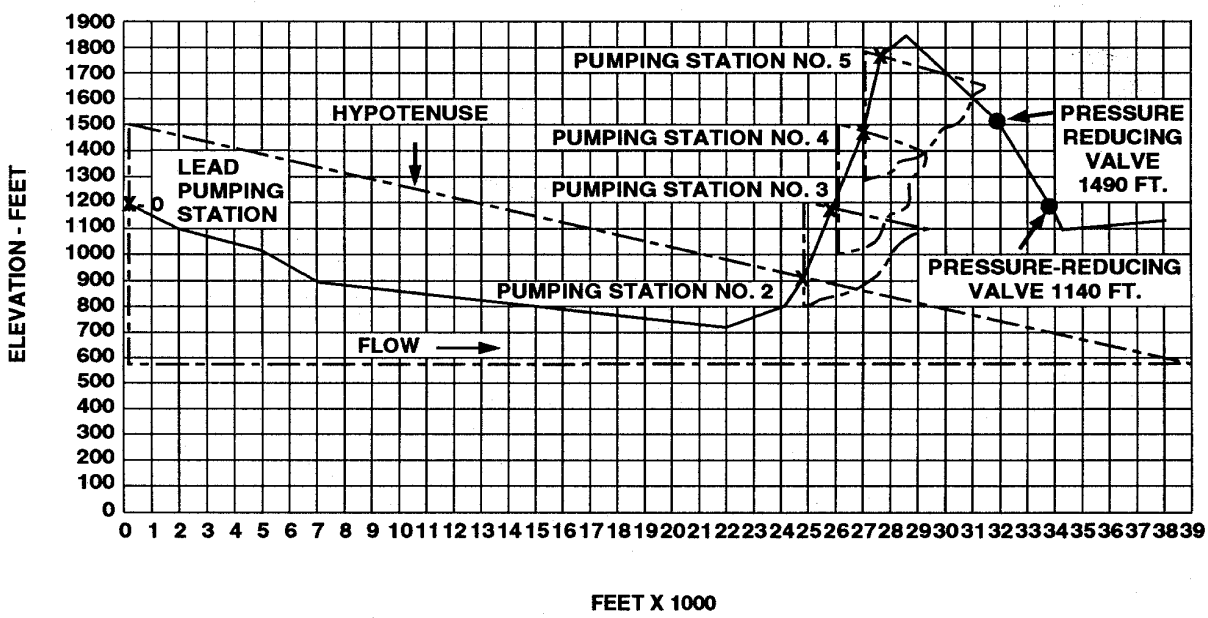

Figure 2-10. First Boost Pumping Station Location.

NOTE: TO PREVENT DAMAAGE TO TWDS COMPONENTS DO NOT ALLOW THE WATER PRESSURE TO EXCEED 225 PSIG.

6. **Determining Pressure Reducing Valve Location**: If pressure builds to 222 psi, hoseline can rupture and equipment failure will result. Therefore, when a sharp elevation drop along hoseline route is indicated by the ground profile graph, a pressure-reducing valve assembly must be installed in the hoseline. To determine pressure-reducing valve location, refer to ground profile graph and proceed as follows:

a. Mark crest of hill on ground profile graph.

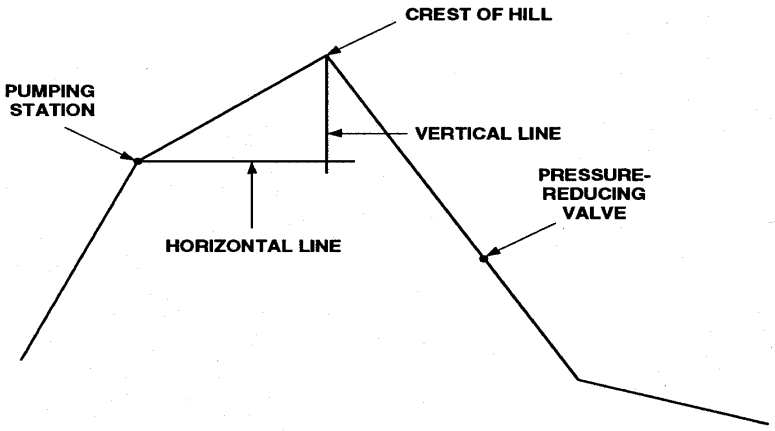

Figure 2-11. Pressure-Reducing Valve Assembly Location.

b. Draw a vertical line downward from hill crest.

c. Determine location of pumping station closest to hill crest (on uphill side).

d. Draw a horizontal line outward from pumping station until it intersects the vertical line drawn in step b. above

e. Measure footage of horizontal line and footage of vertical line.

f. Using formula provided below, determine total hoseline footage between pumping station and hill crest:

Total hoseline footage = $\sqrt{a2 + b2}$ (square root of (a squared + b squared)

A = Horizontal line footage
B = Vertical line footage

g. Using formula provided below, determine friction loss of total hoseline footage in terms of vertical feet:

Total hoseline footage x 0.024 = Vertical feet of friction loss in hoseline.

(0.024 = friction loss conversion factor)

h. Using formula provided below, determine total feet of friction loss:

(Vertical feet of friction loss)	**+**	**(Feet of elevation between pumping station and hill crest)**	**=**	**(Total feet of friction loss)**

i. Using formula provided below, convert total feet of friction loss into psi:

$$\frac{\text{Total feet of friction loss}}{2.31} = \text{friction loss in psi}$$

2.31 = psi conversion factor

j. Using formula provided below, determine existing psi at hill crest:

150 psi – psi of friction loss = psi at hill crest

(150psi = pumping station discharge pressure)

k. Using formula provided below, determine allowed additional psi before safety limit is reached:

225psi – psi at hill crest = Allowed additional psi before reaching safety limit

(225 psi = Safety limit pressure)

l. Using formula provided below, convert allowed additional psi into vertical feet:

Allowed additional psi x 2.31 = Allowed additional vertical feet before reaching safety limit.

m. Using formula provided below, determine point at which pressure reducing valve assembly must be installed in hoseline:

Altitude at Hill crest	-	Allowed additional vertical footage	=	Pressure reducing valve installation point

n. If elevation continues to drop excessively beyond first pressure reducing valve installation point, a second pressure reducing valve assembly must be installed in the hoseline. Using formula provided below, determine point at which next pressure reducing valve assembly must be installed in hoseline:

Altitude at first pressure Reducing valve	-	346.5	=	Second pressure reducing valve installation point

(346.5 = allowed additional vertical footage before reaching safety limit)

7. **Installation of Lead Pump:**

a. The first stage of assembly begins at the water source. Locate a site for lead pump near storage tanks.

b. Lead Pump Assembly Requires:

(1) Four (4) Marines.

(2) One (1) Hour.

(3) Components from crate marked pumping station.

(4) 600 GPM Pump.

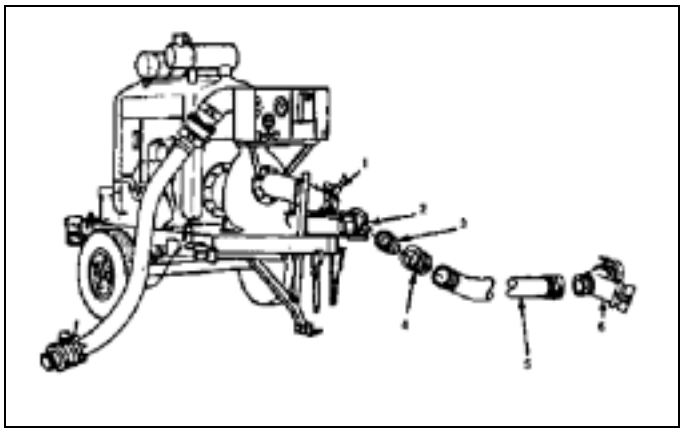

8. **Assembly of Ten Mile Hose Line Segment:**

a. Manpower Requirements

(1) Supervisor: One supervisor is needed per truck to oversee hose laying operations. Should a problem develop during hose laying operation, the supervisor is responsible for contacting operators at pumping stations who are packing the hose line.

(2) Driver: One driver is needed to operate each truck.

(3) Assistant Driver: An assistant driver is needed to observe hose laying operation, tell the driver to speed up, slow down, or stop the truck depending on the needs of the line walkers straightening and repositioning hose line. He must also observe hose for catching or binding as it flakes out of the box.

(4) Line walkers: A minimum of two line walkers are needed to follow behind each truck and perform the following tasks:

(a) Straighten out kinks or bends in hose line.

(b) Remove small obstructions, branches, and sharp rocks that can damage hose line.

(c) Approximately 18 hours to install 10 mile segment.

(NOTE: INSTALL A SWIVEL JOINTS EVERY 1000 FEET TO PREVENT DAMAGE FROM KINKS OR PRESSURE SURGES.)

(d) Continue to lay hose until hose line in all four boxes has been flaked. Retain empty flaking boxes.

(e) Reload truck with 4 new flaking boxes.

(f) Connect bottom hose to last hose laid out and continue laying process.

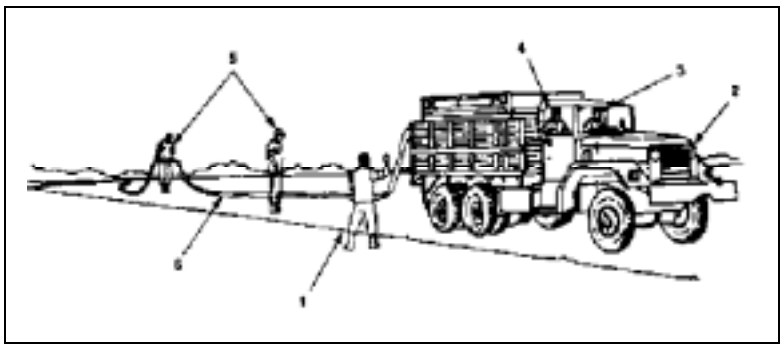

9. **Assembly of Boost Pump Station:**

a. At the 2-mile interval, our 10-mile segment will need a pressure boost to continue down line. Using the components from the crates marked pumping station and a 600 GPM pump does the assembly. Remember that this assembly is the same for the remaining pump stations down line.

b. Boost Station Requires

(1) Four Marines.

(2) One hour per station.

(3) Components from crates marked pumping station.

(4) 600 GPM Pump.

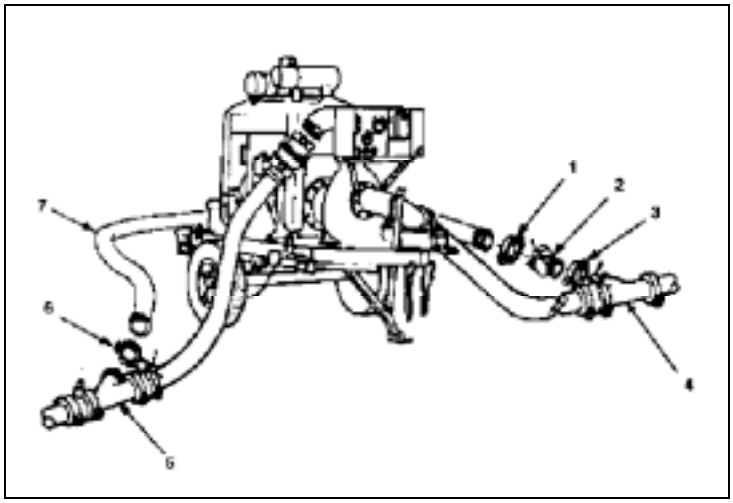

10. **Assembly of Distribution Points:**

a. Distribution point requires:

(1) Four Marines.

(2) Three hours per distribution point.

(3) Components from crate marked "Distribution Point."

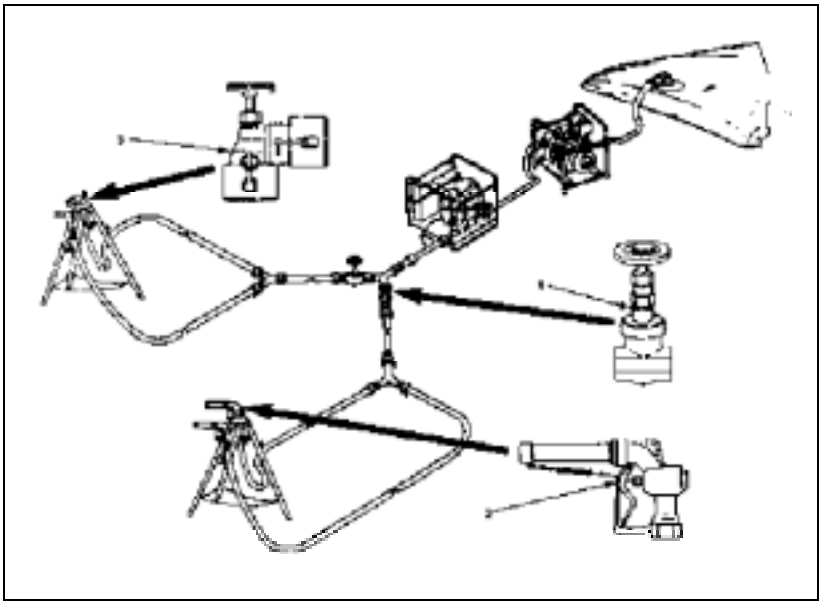

b. Site Selection:

(1) Ensure the area selected is properly prepared for the 20K tank.

(2) Site is free of all debris, which might puncture 20K.

(3) Ensure area is level so tank won't roll when filled.

(4) A shallow trench needs to be dug for drain line.

c. Install 2 lister bags:

(1) Construct 4X4 tripods that will support 400lbs.

(2) Suspend bags from center of tripod.

(3) Fill with potable water.

d. Filling of storage and distribution points:

(1) The water column coming down line moves about 6 mph.

(2) Using a water column to fill a 20K will slow down line progress of column to 3 mph while 20K fills.

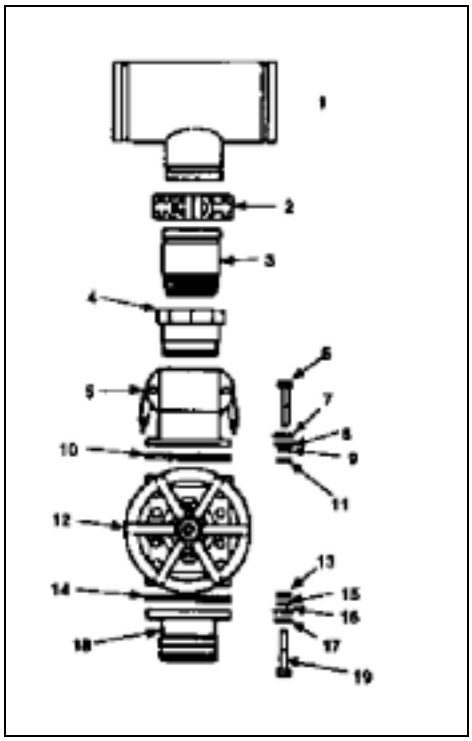

11. **Crossing Roads (ROAD GUARDS):**

a. Depending upon the type of road to cross will determine on the logistic support needed.

b. An unimproved road averaging 15 feet wide using 4 Marines, will take approximately 5 hours/average 2 1/2 feet an hour.

c. Improved roads such as paved or concrete, will require engineer support. If possible avoid these roads or lay hose parallel to road.

d. Installation of Road Guard

(1) Dig a trench 18" deep X 26" wide.

(2) Lay planking in trench.

(3) Lay hose on planking.

(4) Lay road guard over hose. Each guard is 5 feet in length.

(5) Nail road guards to plank.

(6) Back fill trench.

(7) Continue laying operations.

12. **Suspension Kit:** The suspension kit is used to cross-streams or deep ravines.

a. Each suspension kit provides material for one 200-foot crossing or two (2) shorter crossings.

b. Materials for construction of suspension towers are not included in kit.

(NOTE: SPANS UP TO 75 FEET 4 X 4'S ARE ADEQUATE. SPANS OVER 75 FEET 6 X 8'S ARE ADEQUATE. TREES CAN EVEN BE USED, ONLY IF THEY ARE LARGE ENOUGH TO SUPPORT HOSE.)

c. The distance that the hose is being suspended across determines the amount of sag allowed in the cable and hose.

EMPTY HOSE		FULL HOSE	
SPAN DISTANCE	MAXIMUM SAG	SPAN DISTANCE	MAXIMUM SAG
DIMENSION A (FEET)	DIMENSION B (FEET) (APPROX)	DIMENSION A (FEET)	DIMENSION B (FEET) (APPROX)
25	1.5	25	2.25
50	3	50	4.50
75	4.5	75	6.75
100	6.5	100	9
150	9.5	150	13.50
200	13	200	18

13. **Displacement and Evacuation Kit:** The displacement and evacuation kit is used to remove water and air from the hose line prior to packing. An air compressor is required to operate the kit. (250 CFM AIR COMPRESSOR) Using the compressed air as a propellant a polyurethane ball, which fits snugly within the hose, is forced through the hose. As the ball passes through the hose it displaces the

water. A receiver captures the ball after exiting the hose. The hose end is then plugged and a vacuum is applied until the air within the hose is evacuated and the hose collapses. As the hose collapses, end caps are installed to prevent the hose from expanding before it is packed.

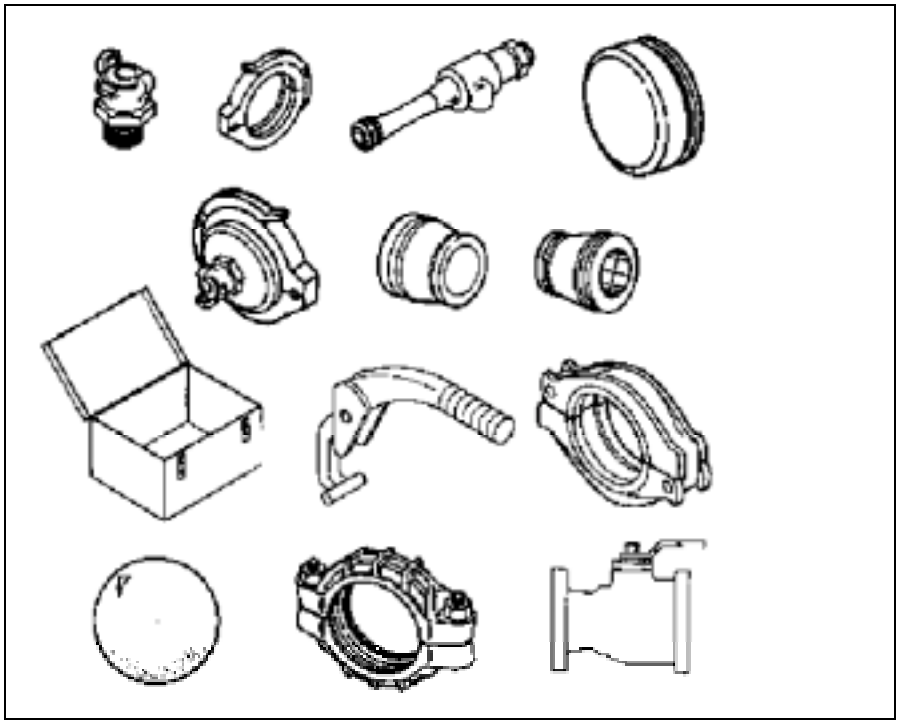

14. **SIXCON**:

a. Characteristics: A module unit, which consists of five tank modules and one pump module. The SIXCON modules attach together to form an 8 foot by 8 foot by 20 foot module. The modules form a water distribution source that can be transported as a unit or quickly taken apart for rapid deployment or relocation.

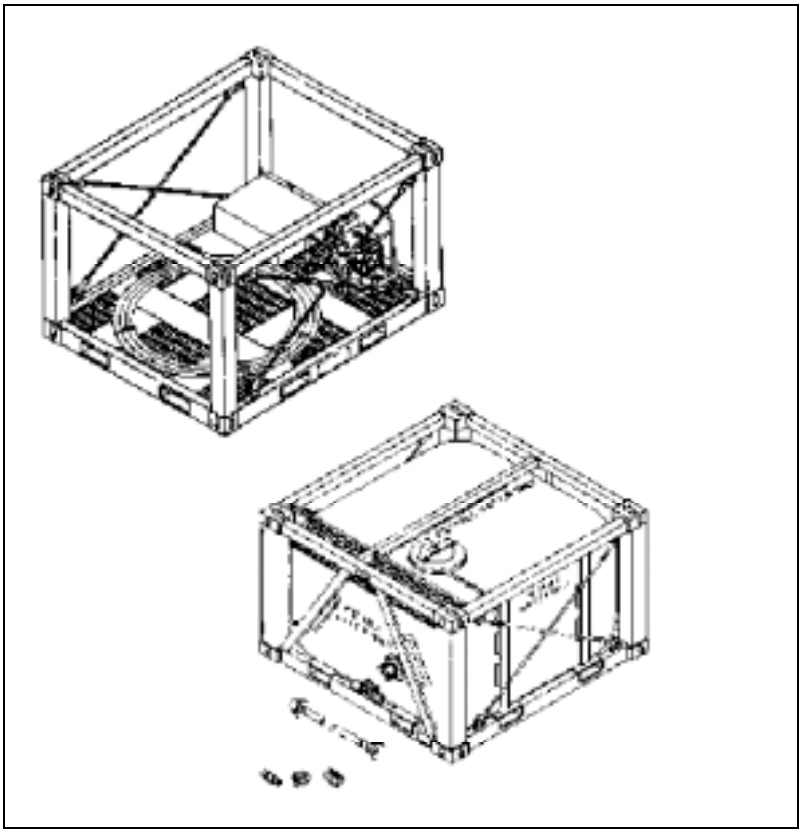

b. Components: The Sixcon module is made up of Six total components and two major component groups.

(1) Pump Module: The Sixcon water pump module consists of a 125 GPM pump unit, a Sixcon shipping frame and various hoses, couplings, and fittings. The water pump module is designed to dispense water from any one of the water supply tanks (mobile or stationary) for support of combat equipment and personnel in the field.

(2) Water Tank Module: The Sixcon water tank module is a stainless steel insulated tank capable of holding 934 gallons of water. The tank is housed within an external frame. The water tank is covered with at least 1 inch of foam insulation to keep stored water from heating up or freezing, and keep the tank from sweating in muggy climates. The tank is equipped with an internal baffle to minimize sloshing of tank contents during transport.

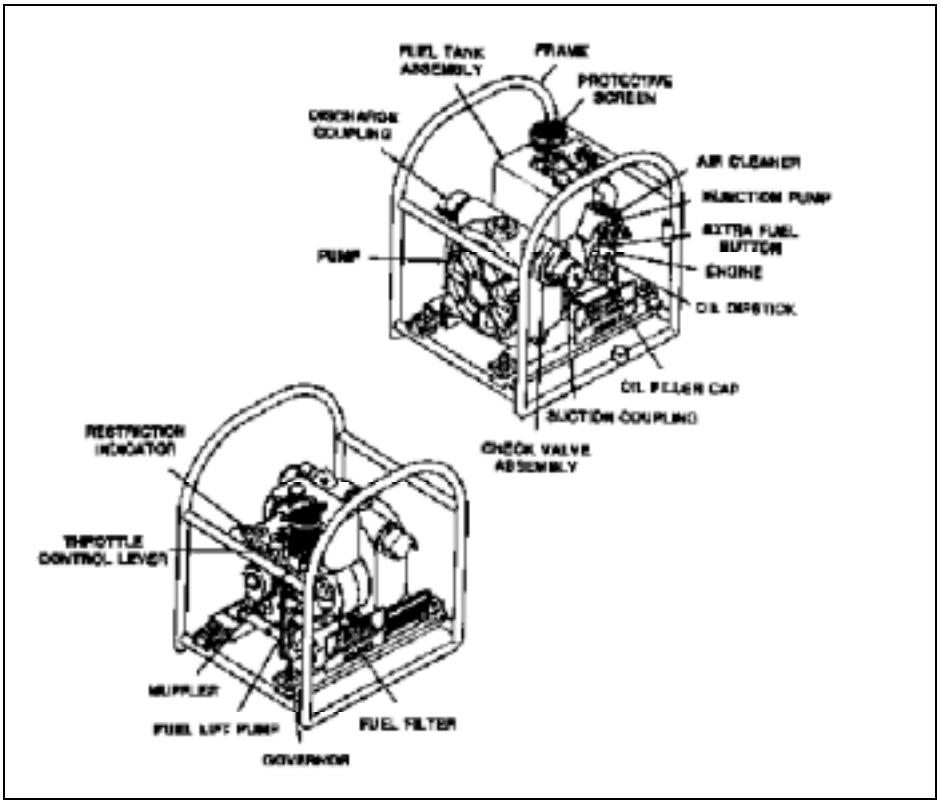

c. Setup and operation:

(1) Manpower requirements: 2 Marines, used to secure connectors and guide forklift. The 6 modules can be set up in 45 minutes to 1 hour.

(2) If required to have the modules joined both horizontally and vertically, build vertical stacks of two modules each and join the stacks horizontally.

d. Site Selection: Individual modules should be landed in an area that is within 10 degrees of level.

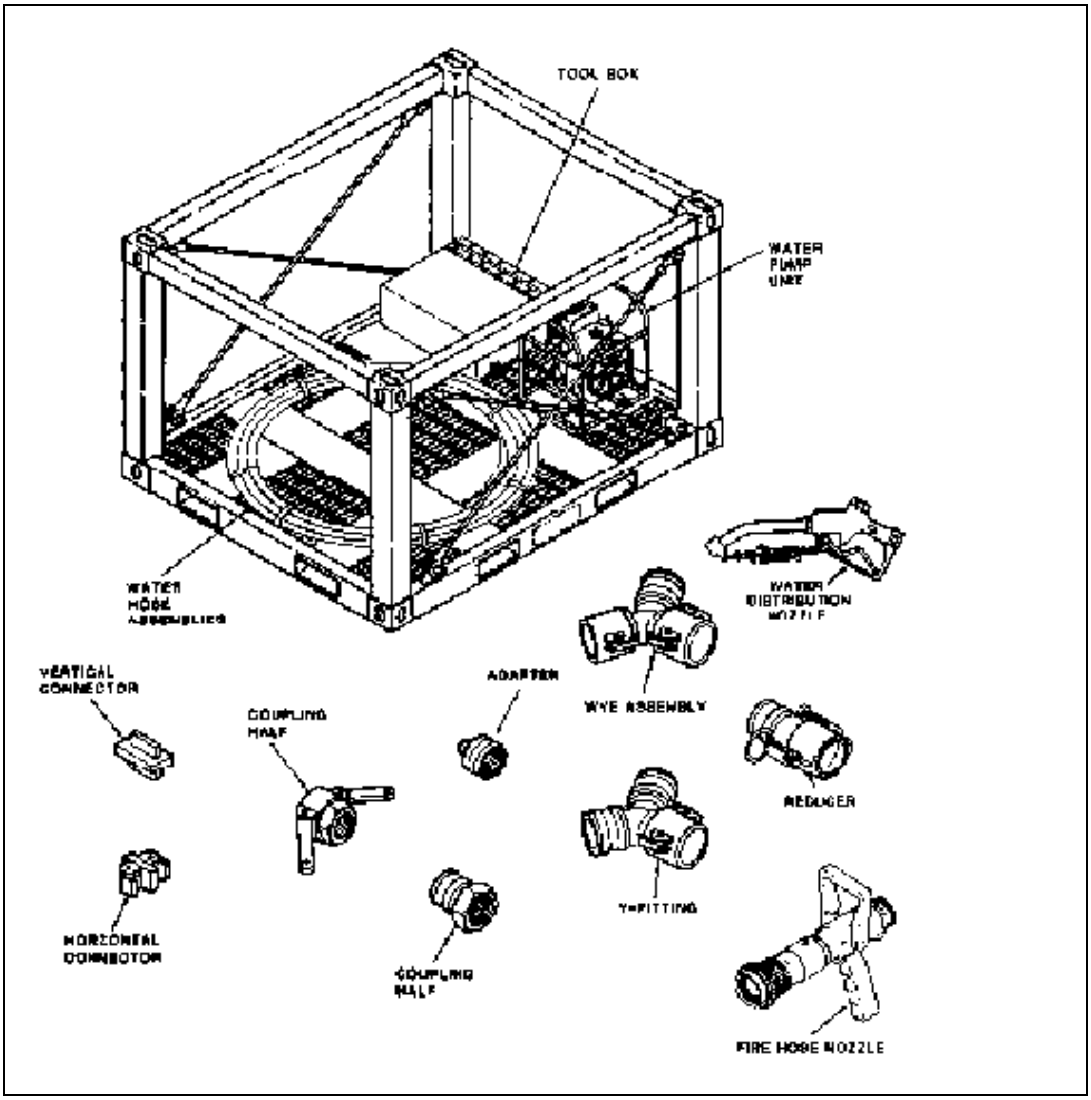

e. Transportation of the Sixcon system:

(1) There are only a few vehicles available to carry the weight of full water tank modules. The empty tank weighs approximately 2,630 pounds and a full one weighs approximately 10,000 pounds.

(2) A maximum of three water modules can be linked together for cross-country tactical transport using the (LVS). One of the smallest vehicles that can handle the Sixcon tank module is the five-ton, M-900 series. This truck is only capable of transporting a single tank module.

f. Safety Precautions:

(1) Ensure only potable water is stored/dispensed in water tank modules.

(2) Injury to personnel or damage to equipment could occur from improper hoisting/lifting.

(3) Incorrect installation of horizontal and vertical connectors may result in injury to personnel or damage to equipment.

15. **FAWPSS**:

a. Characteristics: The Forward Area Water Point Supply System is designed to store and dispense potable water. The FAWPSS is one of the forward configurations of the MWSSS. The drum weighs approximately 4,500 pounds full and 300 pounds empty.

b. Capabilities:

(1) Capable of rapid deployment to forward area troops.

(2) Storing a maximum of 3,000 gallons of potable water.

(3) Dispensing potable water by pumping the water from the collapsible storage drums to the nozzles at the water dispensing points.

c. Components:

(1) Pump and engine assembly. A 125 GPM diesel powered pump is provided with the FAWPSS to distribute the potable water or refill the drums.

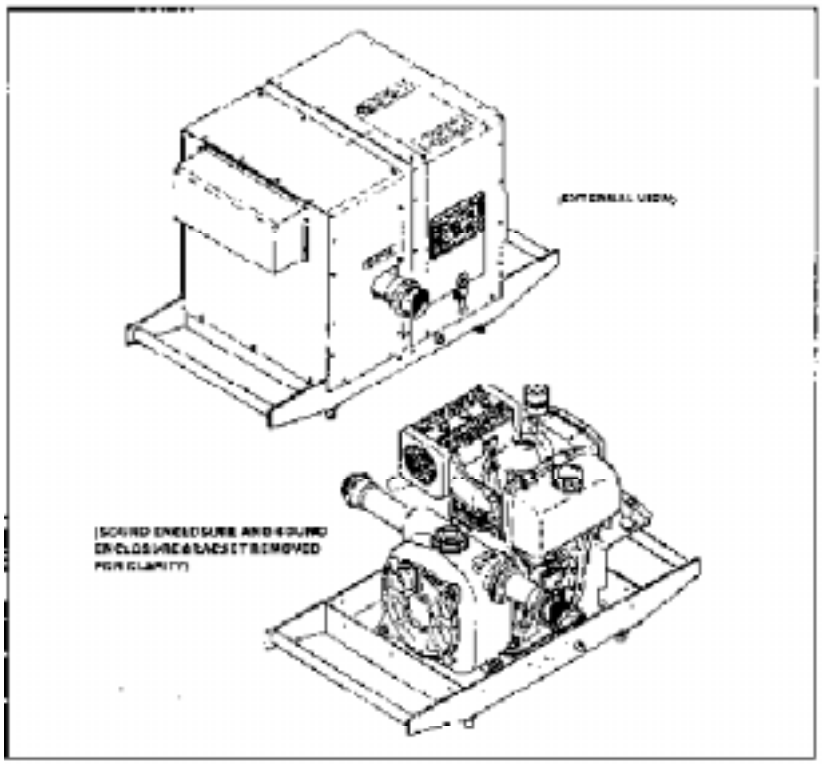

135 GPM pump

(2) Collapsible water drums: Six 500-gallon collapsible water drums with coupler valve assemblies are furnished to store water within the FAWPSS until it is needed at the distribution points.

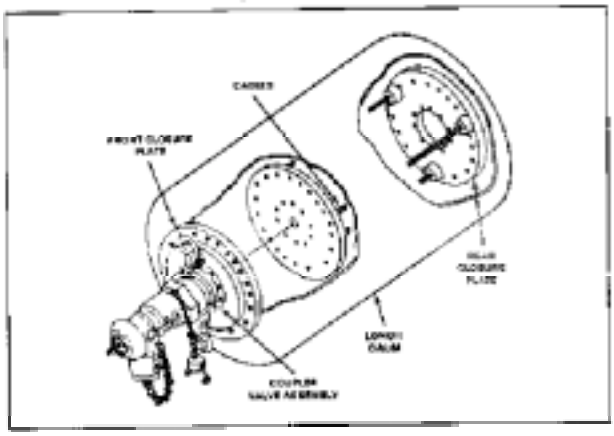

500 gallon drum

(3) Towing yoke: One towing yoke is provided with the FAWPSS. Do not tow collapsible drum over sharp objects or rough terrain. **DO NOT** tow collapsible drum at speeds greater than 10 mph. Do not tow drums that are not completely full.

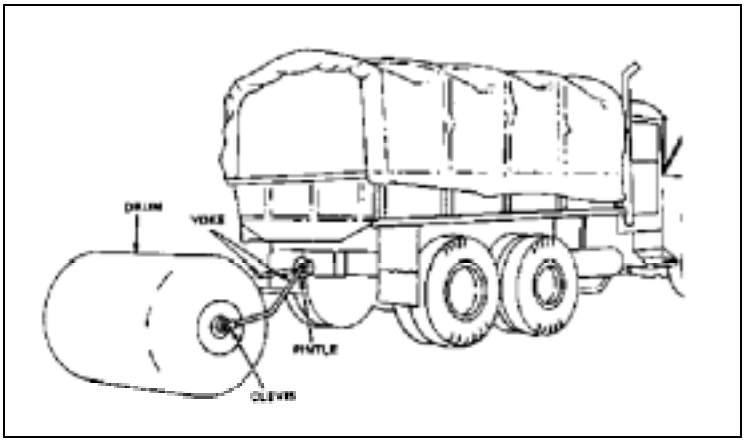

(4) Nozzle assemblies: Four nozzle assemblies are provided to distribute the potable water.

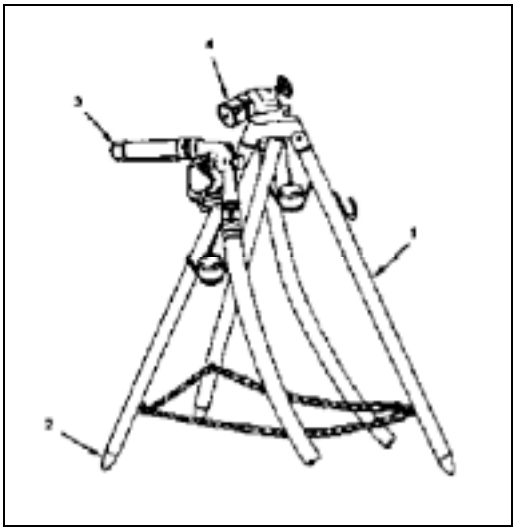

(5) Nozzle stand assemblies: Two nozzle stand assemblies are provided to hold the nozzles when not in use.

(6) Swivel assemblies: Four swivel assemblies are attached to each of the four nozzle assemblies to allow freedom of movement.

(7) Valve assemblies: To allow for flexibility in choosing which collapsible drum assembly will be used for distribution of water.

(8) Hose assemblies: For distribution of potable water four 2″x 10 feet hoses, two 2″x 25 feet hoses, four 1 1/2″x 25 feet long hose assemblies are provided.

(9) Fuel cans: Two five-gallon fuel cans are provided for refueling the FAWPSS.

d. Location: Select a flat, solid, debris-free area with adequate terrain drainage. This area should measure approximately 30 feet by

120 feet and be free of overhead obstacles to permit delivery and removal of water storage drums by helicopter.

e. Set up and operation:

(1) Assign two marines to fill the FAWPSS.

(2) There are two ways of filling the 500-gallon drums. One is filling the drums directly from the water supply point the other is to use the 125-gpm pump that comes with the FAWPSS. The position and the task of the crew vary with each of these methods.

f. Safety Precautions:

(1) Contaminated water can injure personnel. Ensure the water is properly tested before dispensing.

16. **Support Requirements**:

a. TWDS:

Requirements	Qty	Purpose
5-Ton	1 ea.	Flaking Hose
Forklift (6,000lbs min.)	1 ea.	Provides unloading and loading
30 wt. Oil	6 quarts every 50 hrs	600 gpm Pumps
30 wt. Oil	1.1 quarts every 50 hrs	125 gpm pumps
Diesel Fuel	1.5 gph	600 gpm Pumps
Diesel Fuel	.5 gph	125 gpm Pumps
Chlorine	1 drum	Hypochlorinator

b. Sixcon:

Requirements	Qty	Purpose
5-Ton/LVS	1 ea.	Provides transportation
Forklift (10,000lbs min)	1 ea.	Provides unloading and loading
30 wt. Oil	1.1 quarts every 50 hrs	125 gpm Pump
Diesel Fuel	.5 gph	125 gpm Pump

c. FAWPSS:

Requirements	Qty	Purpose
5-ton or Helicopter	1 ea.	Moving Drums

Forklift or Crane		
30 wt. oil	1.1 quarts every 50hrs	125gpm Pumps
Diesel Fuel	.4 gph	125 gpm Pumps

17. **Safety Precautions**:

a. Provide fire extinguishers and establish fire points.

b. Ensure operators are wearing hearing protection.

c. Have NO SMOKING, NOISE HAZARD, AND POL signs posted.

d. Ensure that the Forklift used has the proper load capacity.

e. Ensure that lumber used for tripods is of sufficient size.

f. Ensure water dispensed at distribution points is properly tested.

g. Ensure only potable water is stored and transported with distribution equipment.

h. Do not store chemicals in bright sunlight.

i. Provide aprons, gloves, and goggles when handling chemicals.

j. Post signs indicating hose lines under pressure.

k. Do not tow FWPSS drums greater than 10 mph.

18. **Task Requirement**:

a. Task requirements will be derived from the information covered in this lesson. You will be required to determine the minimum amount of personnel, by MOS and rank, that it will take to set up and operate each item of distribution equipment used in your plan. The number of personnel will vary for each group depending on the amount of equipment used and the task assignment.

b. The TWDS requires 10 - 15 Marines to setup and operate.

c. The Sixcon requires 2 Marines to operate and setup.

d. The FAWPSS requires 2 Marines operate and setup.

REFERENCES:

FM 10-52-1 Water Supply Point Equipment and Operations

TM 10-4320-303-10	Tactical Water Distribution System
TM 09444A/08990A-15&P1	Sixcon Water Tank Module
TM 08922A-14/1	Forward Area Water Point Supply System