UNITED STATES MARINE CORPS
Utilities Instruction Company
Marine Corps Engineer School
PSC Box 20069
Camp Lejeune, North Carolina 28542-0069

U-05D05
FEB 00

STUDENT HANDOUT

ELECTRICAL POWER GENERATION EQUIPMENT

1. Learning Objective(s):

a. Terminal Learning Objective(s)

(1) Provided a generator set, a dummy load, and appropriate equipment technical manuals, direct dummy load operation in accordance with FM 20-31 and the appropriate equipment technical manuals. (1169.02.01)

(2) Provided a set up generator set, operator personnel, and the references, direct generator set operation. The generator set operation will be directed so that it will be operated properly per the reference. (1169.02.04)

(3) Provided a mission, a floodlight set with a generator set, operator personnel, and references, direct floodlight set installation/operation. The floodlight set operation will be directed to ensure that it is operated so that all areas are lighted per the references. (1169.02.03)

b. Enabling Learning Objective(s)

(1) Given a diagram of a generator set, with the aid of references, identify the components of the generator set in accordance with the appropriate equipment technical manuals. (1169.02.04a)

(2) Given a diagram of a generator set, with the aid of references, identify the instruments of the generator set in accordance with the appropriate equipment technical manuals. (1169.02.04b)

(3) Given a list of operating steps, with the aid of references, identify the steps required to operate a generator set in accordance with the appropriate equipment technical manuals. (1169.02.04c)

(4) Given a list of preventive maintenance steps, with the aid of references, identify the preventive maintenance steps that pertain to a generator set in accordance with the appropriate equipment technical manuals. (1169.02.04d)

(5) Given a list of safety precautions, with the aid of references, identify the safety precautions to observe when operating a generator set in accordance with the appropriate equipment technical manuals. (1169.02.04e)

(6) Given a list of installation and operating steps, with the aid of references, identify the steps required to install and operate the floodlight tower in accordance with the appropriate equipment technical manuals. (1169.02.03a)

(7) Given a list of safety precautions, with the aid of references, list the safety precautions to observe when installing and operating the floodlight tower in accordance with the appropriate equipment technical manuals. (1169.02.03b)

(8) Given a list of preventive maintenance steps, without the aid of references, identify the steps that pertain to the floodlight tower in accordance with the appropriate equipment technical manuals. (1169.02.03c)

(9) Given a list of operating steps, without the aid of references identify the steps required to operate a dummy load in accordance with FM 20-31 and the appropriate equipment technical manual. (1169.02.01a)

(10) Given a diagram of a dummy load, with the aid of references, identify the components of the dummy load in accordance with the appropriate equipment technical manual. (1169.02.01b)

(11) Given a list of safety precautions, with the aid of references, identify the safety precautions to observe when operating a dummy load in accordance with the appropriate equipment technical manual. (1169.02.01c)

(12) Given a list of preventive maintenance steps, with the aid of references, identify the steps that pertain to the dummy load in accordance with the appropriate equipment technical manuals. (1169.02.01d)

1. GENERATOR SET COMPONENTS:

a. MEP-803/813: The MEP 803/813 are skid mounted, diesel powered, 10 KW, tactical quiet generator sets. The MEP 803 has a frequency output of 60 hertz. The MEP 813 has frequency output of 400 hertz. A diagram is provided on the next page for the component location of the MEP-803/813.

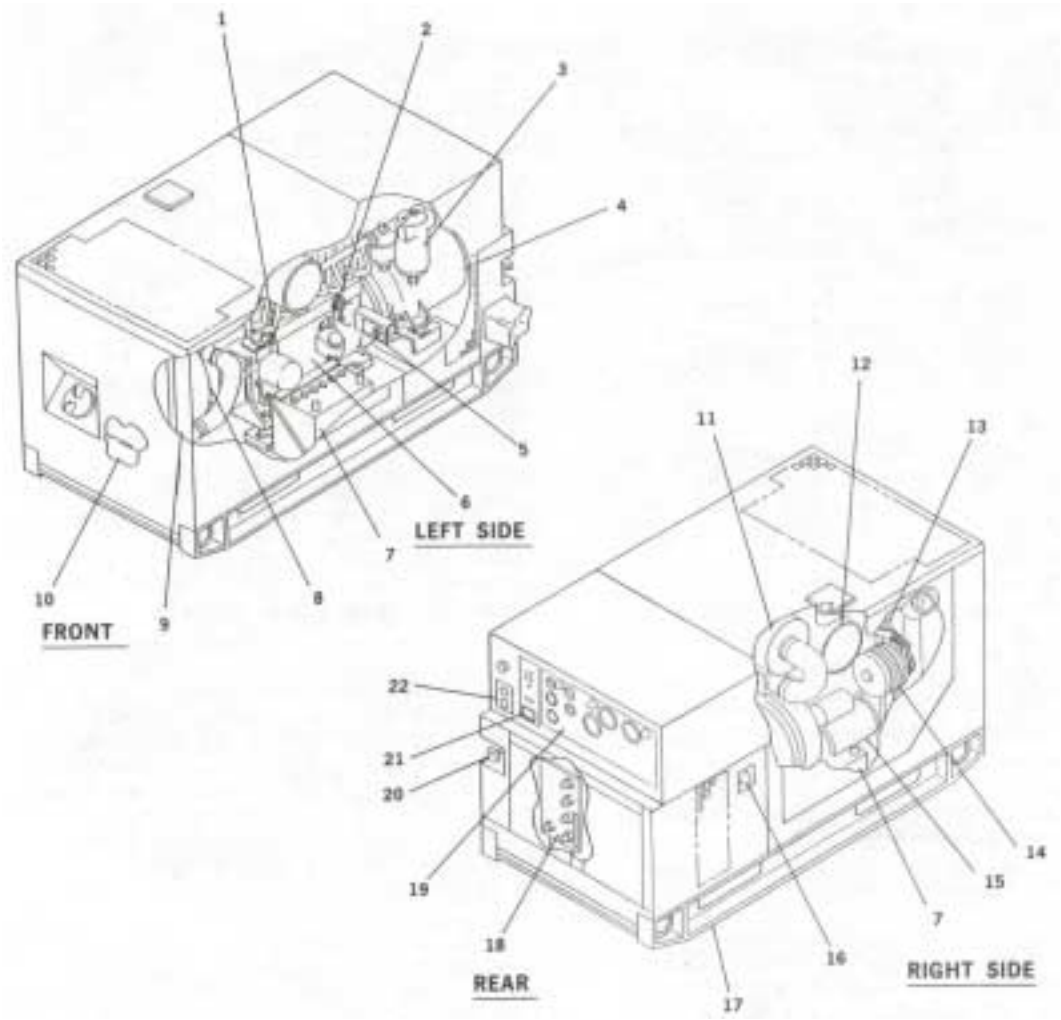

(1) Oil Filter: The Oil Filter is located in the engine compartment on the left side. The filter removes impurities from the engine lubricating oil.

(2) Dipstick: The Dipstick is located in the engine compartment on the left side. The Dipstick shows the lubricating oil level in the engine crankcase.

(3) Fuel Filter/Water Separator: The Fuel Filter/Water Separator is located to the rear of the engine compartment on the left side. The element removes impurities and water from the diesel fuel.

(4) AC Generator: The AC Generator is a single bearing, drip-proof, synchronous, brushless, three phase, fan-cooled generator. The generator is coupled directly to the rear of the diesel engine.

(5) Dead Crank Switch: The Dead Crank Switch is located in the engine compartment on the left side. For maintenance purposes the switch allows the engine to be cranked without starting.

(6) Engine: The Generator is powered by a four cylinder, four cycle, fuel injected, naturally aspirated, liquid-cooled diesel engine which occupies the front half of the generator set. Protection Devices automatically stop the engine during conditions of high coolant temperature, low oil pressure, no fuel, over-voltage.

(7) Batteries: Two Batteries are required, one on each side of the generator set. The batteries are electrolyte serviceable, lead acid, 12-volt type, connected in series. A fuse and a diode, located behind the control panel assembly, protect the generator set if the batteries are incorrectly connected.

(8) Water Pump: The Water Pump is located in the engine compartment on the front of the engine. The pump circulates the engine coolant through the engine block and the radiator.

(9) Radiator: The Radiator is located at the front of the generator set. It acts as a heat exchanger for the engine coolant.

(10) Fuel Tank: The 9 gallon fuel tank is located in the front of the generator set below the engine and between the skid base side members. The 9-gallon fuel capacity allows the generator to operate 8 hours at an 80% load before refueling is necessary.

(11) Air Cleaner Assembly: The Air Cleaner Assembly is located on the right side behind the engine. It consists of a dry-type, disposable air filter element made of paper and a canister. The air cleaner assembly features a dust collector, which traps large dust particles. It also has a restriction indicator, which will indicate red when the air filter element requires servicing.

(12) Muffler: The Muffler and exhaust tubing are connected to the exhaust manifold on the engine. The exhaust exits from the top of the generator set housing.

(13) Fan Belt: The Fan Belt is located in the engine compartment on the front of the engine. The belt drives the fan, water pump and battery-charging alternator.

(14) Battery Charging Alternator: The Battery Charging Alternator is located on the right side of the engine. It is capable of maintaining the batteries in a state of full charge in addition to providing the required 24 VDC control power.

(15) Starter: The Starter is located on the right side of the engine. The electric starter mechanically engages the engine flywheel in order to start the diesel engine.

(16) NATO Slave Receptacle: The NATO Slave receptacle is located on the right side (rear) of the generator set. It is used for slave starting.

(17) Skid Base: The Skid Base supports the generator set. It has

forklift access openings and cross members for short distance movement. The skid base has provisions in the bottom for installation of the generator set on a trailer.

(18) Load Terminal Board: The load output terminal board is located on the right side (rear) of the generator set. Four output terminals are located on the board. They are marked L1,L2,L3, and L0. A fifth terminal, marked GND, is located next to the output terminals and serves as an equipment ground for the generator set. A removable, solid copper bar is connected between the L0 and GND terminals and serves as the system ground and should not be removed.

(19) Control Panel Assembly: The generator set control panel assembly is located at the rear of the generator set and contains controls and instruments for operating the engine and the generator.

(20) Frequency Adjust Control: The Frequency Adjust Control is located at the rear left side of the generator set. It is used to adjust the generator frequency output.

(21) Malfunction Indicator Panel: The malfunction Indicator Panel is located to the left of the control panel assembly. It indicates malfunctions of the generator set components.

(22) Convenience Receptacle: The convenience receptacle is a 10 amp,120 VAC receptacle used to operate small plug type equipment. It is protected by a Ground Fault Circuit Interrupter located below the malfunction indicator, an overload circuit breaker located inside the control box, and an in-line fuse on generator sets. The convenience receptacle power is available at all times during operation of the generator set.

b. MEP-805/815 and the MEP-806/816: The MEP 805/815 and MEP 806/816 all are skid mounted, Diesel powered, Tactically Quiet Generators. The MEP 805/815 have a 30-kilowatt total output. The MEP 806/816 have a 60-kilowatt total output. The MEP 805/806 output frequency are both 50/60 hertz and the MEP 815/816 have a frequency output of 400 hertz.

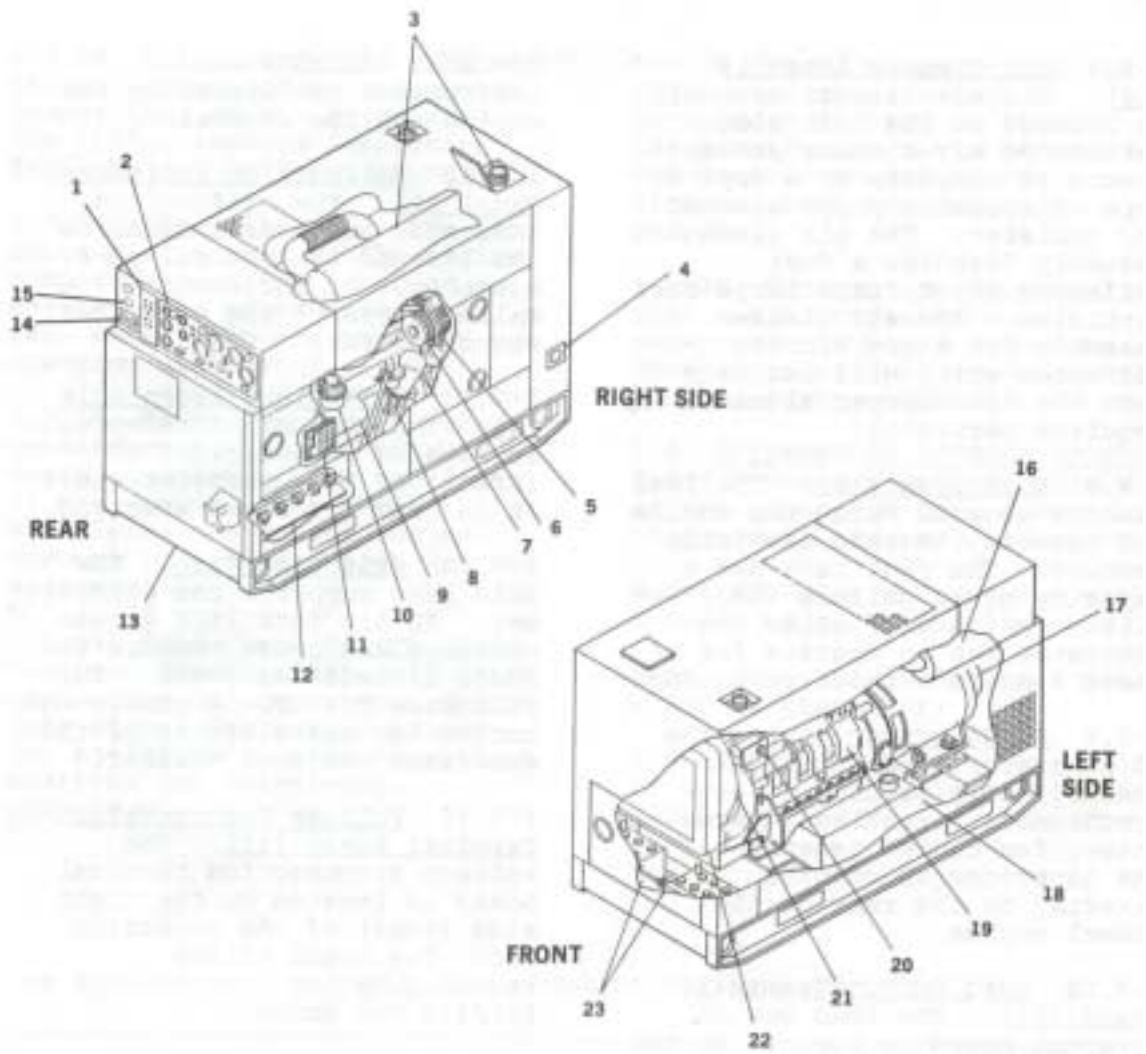

(1) Malfunction Indicator Panel: The Malfunction Indicator Panel is located to the left of the control panel assembly. It indicates malfunctions of the generator set components.

(2) Control Panel Assembly: The generator set Control Panel Assembly is located at the rear of the generator set and contains controls and instruments for operating the engine and the generator.

(3) Muffler: The Muffler and exhaust tubing are connected to the exhaust manifold on the engine. The exhaust exits from the top of the generator set housing. The gases are exhausted upward.

(4) NATO Slave Receptacle: The NATO Slave Receptacle is located on

the right side (front) of the generator set. It is used for slave starting.

(5) Fan Belts: The Fan belts are located in the engine compartment on the front of the engine. The belts drive the fan, water pump, and the battery-charging alternator.

(6) Battery Charging Alternator: The Battery Charging Alternator is located on the right side of the engine. It is capable of maintaining the batteries in a state of full charge in addition to providing the required 24 VDC control power.

(7) Oil Filter: The Oil Filter is located in the engine compartment on the right side. The filter removes impurities from the engine lubricating oil.

(8) Dipstick: The Dipstick is located in the engine compartment on the right side. The dipstick shows the lubricating oil level in the engine crankcase.

(9) Starter: The Starter is located on the right side of the engine. The electric starter mechanically engages the engine flywheel in order to start the diesel engine.

(10) Fuel Filter/Water Separator: The Fuel Filter/Water Separator is located in the engine compartment on the right side. The element removes impurities and water from the diesel fuel.

(11) Voltage Reconnection Terminal Board: The Voltage Reconnection Terminal Board is located in the engine compartment on the right side (rear) of the generator set. The board allows reconfiguration from 120/208 to 240/416 VAC output.

(12) Load Output Terminal Board: The Load Output Terminal Board is located on the right side (rear) of the generator set. There are four output terminals located on the board. They are marked L1,L2,L3, and L0. A fifth terminal, is marked GRD, is located next to the output terminals and serves as an equipment ground for the generator set. A removable, solid copper bar is connected between the L0 and GND terminals and this serves as the system ground and should not be removed.

(13) Skid Base: The Skid Base supports the generator set. It has forklift access openings and cross members for short distance movements. The Skid Base has provisions in the bottom for installation of the generator set on a trailer.

(14) Convenience Receptacle: The Convenience Receptacle is a 120 VAC receptacle used to operate small plug in type equipment.

(15) Paralleling Receptacle: The Paralleling Receptacle is used to connect the paralleling cable between two generator sets of the same size and mode to operate in parallel.

(16) Air Cleaner Assembly: The Air Cleaner Assembly is located on the left side behind the air cleaner access door. It consists of a dry-type, disposable paper element and canister. The air cleaner assembly has a restriction indicator, which will indicate when the air cleaner features a dust collector, which traps large dust particles. The air cleaner assembly has a restriction indicator, which will indicate when the air cleaner element requires servicing.

(17) AC Generator: The AC Generator is a single bearing, drip-proof, synchronous, brushless, three phase, fan-cooled generator. The generator is coupled directly to the rear of the diesel engine.

(18) Fuel Tank: The Fuel Tank is located below the engine and between the skid base side members. The fuel tank has a capacity of 23 gallons for the MEP 805/815 and 43 gallons for the MEP 806/816, which will allow the generator, set to operate for at least 8 hours without refueling.

(19) Engine: The generator is powered by a six cylinder, four cycle, fuel injected, turbo charged, liquid cooled diesel engine, which occupies the front, half of the generator set. The engine is also equipped with a fuel filter/water separator, oil filter, and an air cleaner assembly. Protection devices automatically stop the engine during conditions of high coolant temperature, low oil pressure, no fuel, over-speed, or over-voltage.

(20) Dead Crank Switch: The Dead Crank switch is located in the engine compartment on the left side. The switch allows the engine to be cranked without starting for maintenance purposes.

(21) Water Pump: The Water Pump is located in the engine compartment on the front of the engine. The pump circulates the engine coolant through the engine block and the radiator.

(22) Radiator: The Radiator is located at the front of generator set. It acts as a heat exchanger for the engine coolant.

(23) Batteries: Two Batteries ate located at the front of the generator set. The batteries are electrolyte serviceable, lead acid, 12-volt type, connected in series. After starting, the generator set is capable of operating with batteries removed. A diode and a fuse, located behind the control panel assembly, protect the generator set if the batteries are incorrectly connected.

2. GENERATOR SET INSTRUMENTS:

a. MEP-803/813

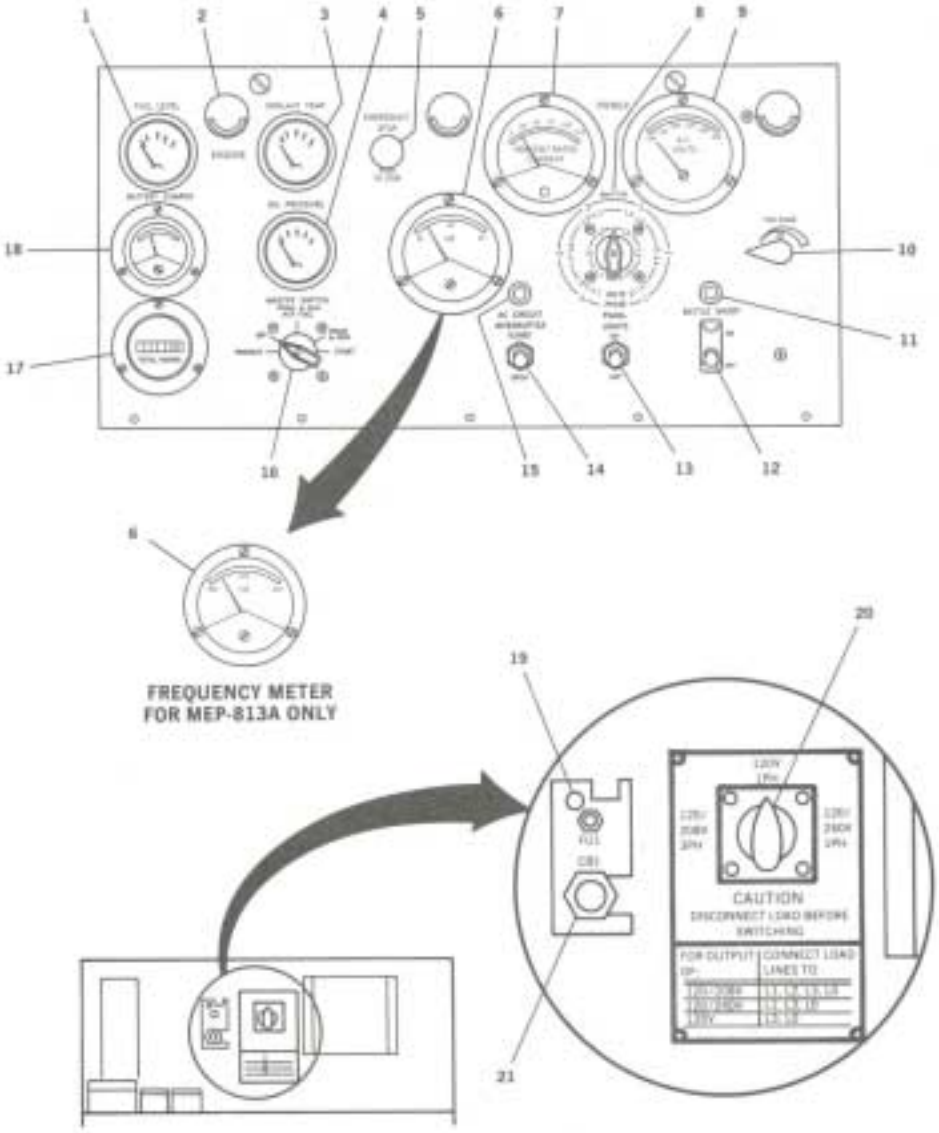

(1) Fuel Level Indicator: Indicates the fuel level in the generators fuel tank.

(2) Panel Lights: Illuminates the control panel during times of darkness.

(3) Coolant Temperature Indicator: Indicates the coolant temperature inside the engine.

(4) Oil Pressure Indicator: Indicates the engine oil pressure inside the engine.

(5) Emergency Stop Pushbutton: Shuts down the generator set in emergency conditions.

(6) Frequency Meter: Indicates the generator set output frequency in Hertz.

(7) Ammeter: Indicates the generator set load current as a percent of the rated current.

(8) AM-VM Transfer Switch: Allows the selection of current and voltage readings between the output load terminals.

(9) AC Voltmeter: Indicates the output voltage of the generator set.

(10) Voltage Adjust Potentiometer: Adjusts the generator set voltage.

(11) Battle Short Light: Amber Light that indicates when the battle short switch is on.

(12) Battle Short Switch: Bypasses all protective devices except for short circuit and overload conditions.

(13) Panel Lights Switch: Activates or deactivates the panel lights.

(14) AC Circuit Interrupter Switch: Opens and closes the AC circuit interrupter relay.

(15) AC Circuit Interrupter light: It is a green light that indicates when the AC circuit interrupter relay is closed.

(16) Master Switch: Has 5 positions and initiates the start sequence.

(17) Time Meter: Indicates the total hours that an engine has operated.

(18) Battery Charge Ammeter: Indicates charge/discharge rate of the batteries.

(19) DC Control Circuit Breaker: Energizes of de-energizes the DC circuit.

(20) AC Voltage Reconnection Switch: Selects 120/208VAC, 3 Phase; 120 VAC, 1 Phase; or 120/240 VAC, 1 Phase.

(21) Battery Charger Fuse: Protects the battery-charging alternator against over charging the batteries.

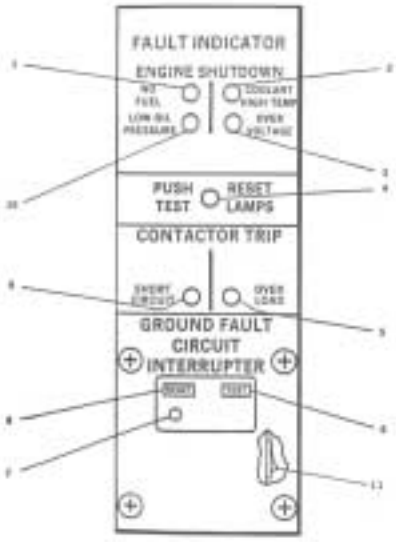

(1) No Fuel Indicator: Illuminates when the fuel level in the fuel tank is below the preset level.

(2) Coolant High Temperature Indicator: Illuminates when the engine coolant temperature exceeds 225 Degrees F +/- 5 Degrees.

(3) Over Voltage Indicator: Lights when voltage in the 120 volt generator coil exceeds 153 VAC +/- 3 volts.

(4) Push test Reset Lamps: test and resets the fault indicator lamps.

(5) Over Load Indicator: Lights when current in any phase exceeds 110 percent of the rated current.

(6) Ground Fault Circuit Interrupter Test Pushbutton: Test the ground fault circuit interrupter.

(7) Ground Fault Circuit Interrupter Indicator: Mechanically trips and shows the red indicator when a ground fault condition is present in the convenience receptacle.

(8) Ground fault Circuit Interrupter PUSH TO TEST Pushbutton: Depress to reset Ground Fault Circuit Interrupter after test or ground fault has occurred.

(9) Short Circuit Indicator: Lights when the generator output in any phase exceeds 425 +/- 25 percent of the rated current.

(10) Low Oil Pressure Indicator: Lights when the engine lubrication systems pressure is less than 15 +/- 3 PSI.

(11) Convenience Receptacle Overload Circuit Breaker: It is a 10-amp in-line fuse on the generator set. The circuit breaker trips on when the load on the convenience receptacle exceeds 10 amps.

b. MEP 805/815 and MEP 806/816

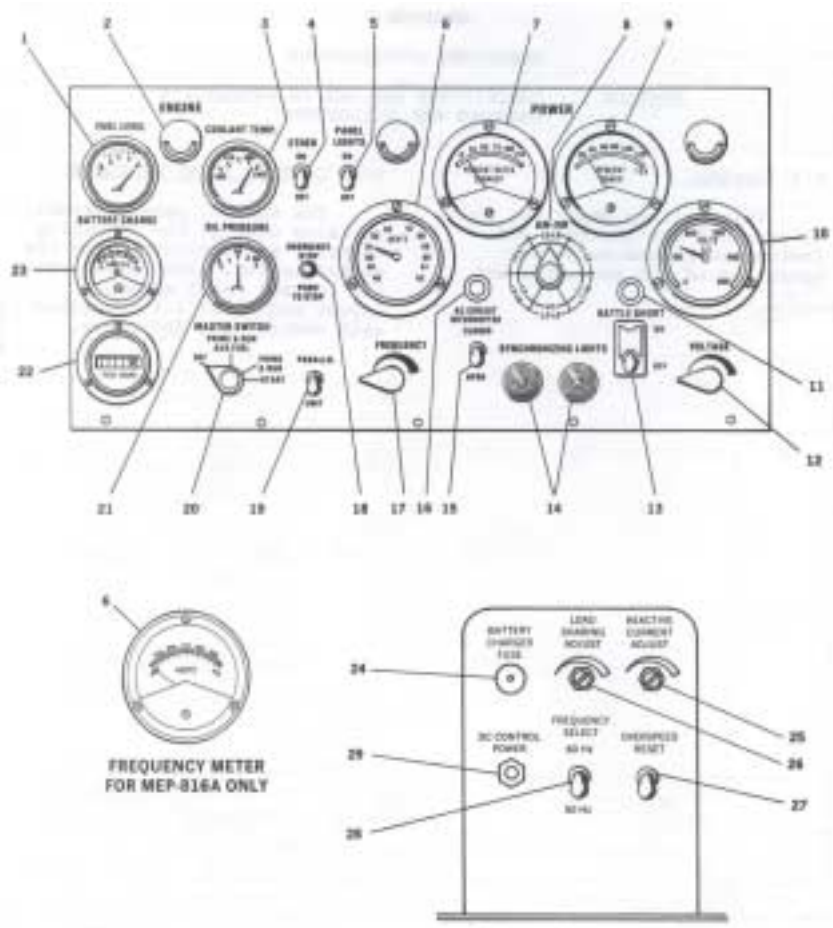

(1) Fuel Level Indicator: Indicates the fuel level in the generator’s fuel tank.

(2) Panel Lights: Illuminates the control panel during times of darkness.

(3) Coolant Temperature Indicator: Indicates the coolant temperature inside the engine.

(4) Either Switch: Activates or deactivates the cold starting aid system.

(5) Panel Light Switch: Activates or deactivates the panel lights.

(6) Frequency Meter: Indicates the generator set output frequency in hertz.

(7) Ammeter: Indicates the generator set load current as a percent of the rated output current.

(8) AM-VM Transfer Switch: Allows the selection of current and voltage readings between the output load terminals.

(9) Kilowatt Meter: Indicates the generator set output power as a percent of the rated power.

(10) AC Voltmeter: Indicates the output voltage of the generator set.

(11) Battle Short Light: Amber Light that indicates when the battle short switch is on.

(12) Voltage Adjust Potentiometer: Adjusts the generator set voltage.

(13) Battle Short Switch: Bypasses all protective devices except for short circuit and overload conditions.

(14) Synchronizing Lights: Indicates synchronization of the units to be paralleled.

(15) AC Circuit Interrupter Switch: Opens and closes the AC circuit interrupter relay.

(16) AC Circuit Interrupter light: It is a green light that indicates when the AC circuit interrupter relay is closed.

(17) Frequency Adjust Potentiometer: Adjust the output frequency of the generator set.

(18) Emergency Stop Pushbutton: Shuts down the generator set in emergency conditions.

(19) Parallel unit Switch: Energizes or de-energizes the paralleling circuits.

(20) Master Switch: Has 5 positions and initiates the start sequence.

(21) Oil Pressure Indicator: Indicates the oil pressure inside the engine.

(22) Time Meter: Indicates the total operating hours that the engine has operated.

(23) Battery Charge Ammeter: Indicates charge/discharge rate of the batteries.

(24) Battery Charger Fuse: Protects the battery-charging alternator from overload.

(25) Reactive Current Adjust Rheostat: Adjusts the current for load sharing requirements.

(26) Load Sharing Adjust Rheostat: Adjust the power for load sharing requirements.

(27) Overspeed Reset Switch: Resets the generator set after an overspeed condition has occurred.

(28) Frequency Select Switch (MEP 805/806 only): Allows the selection of 50 HZ or 60 HZ.

(29) DC Control Power Circuit Breaker: Energizes or de-energizes the DC circuits.

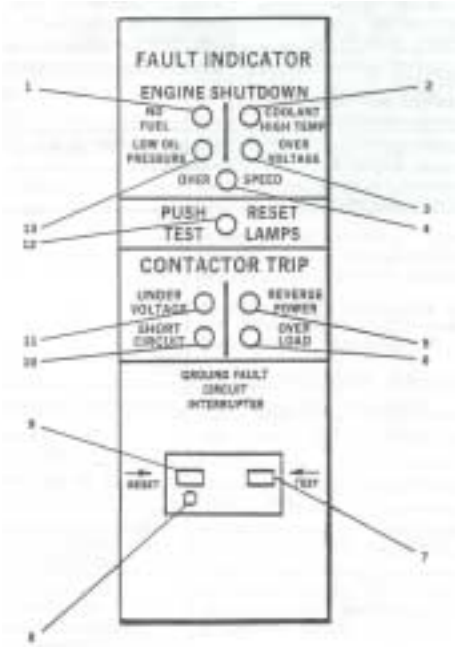

(1) NO Fuel Indicator: Illuminates when the fuel level in the fuel tank is below the preset level.

(2) Coolant High Temperature Indicator: Illuminates when the engine coolant temperature exceeds 225 degrees F +/- 5 degrees.

(3) Over-Voltage Indicator: Illuminates when voltage in a 120-volt generator coil winding exceeds 153 +/- 3 volts.

(4) Over-Speed Indicator: Illuminates when the engine speed exceeds 2200-RPM +/- 40 RPM.

(5) Reverse Power Indicator: Illuminates when the power flow into the generator set exceeds 20 +/- 3 percent of the rated current.

(6) Over Load Indicator: Illuminates when current in any phase exceeds 110 percent of the rated current.

(7) Ground Fault Circuit Interrupter Test Pushbutton: Tests the ground fault circuit interrupter.

(8) Ground Fault Circuit Interrupter Indicator: Mechanically trips and shows the red indicator when a ground fault condition is present in the convenience receptacle.

(9) Ground Fault Circuit Interrupter Reset Pushbutton: Resets the Ground Fault Circuit Interrupter.

(10) Short Circuit Indicator: Illuminates when the generator set output in any phase exceeds 425 +/- 25 percent of the rated current.

(11) Under Voltage Indicator: Lights when voltage in a 120-volt generator coil winding drops below 99 +/- 4 VAC.

(12) Push test Reset Lamps Switch: Tests and resets the fault indicator lamps.

(13) Low Oil Pressure Indicator: Illuminates when the engine lubrication systems pressure is less than 15 +/- 3 PSI.

3. GENERATOR SET OPERATION: There is a big difference between starting a unit and operating the unit. There are several steps that the operator must follow in order to properly operate the equipment.

a. Operational checks must be made prior to starting the unit. These steps are called the 360 checks.

(1) First, a visual check must be made of all the fluid levels, ensuring that they are within recommended limits.

(2) Next, an inspection of all areas of the unit, looking for any missing or damaged parts or connections.

(3) Then, inspect any air flow screens to ensure proper operation and make sure that they are free from obstruction and that the acoustical.

(4) Finally, perform a pre-start check of the control panel to ensure the operation of the controls and the fault indicators.

b. Our next step is to start the generator set.

(1) Push in the DC circuit breaker. This energizes all of the DC circuits required to start the unit and turn the dead crank switch to the run position.

(2) Energize master switch in the prime/run position. This allows the fuel pumps to operate and fills the day tank with fuel.

(3) Once the pumps have slowed down, turn the master switch to the start position. Once the engine starts, hold up the switch until the

frequency meter is registering, release the switch, and it will return to the prime/run position.

(4) Once the unit is running, adjustments may be made to the frequency and the voltage.

(5) After the unit has had an opportunity to warm up, the load switch will be used to apply power to the load.

c. Next, the during operation checks must be performed as required several times during the operation, checking for warning lights, load draws, fluid levels and other problems.

d. When it is time to shut down the unit, steps are taken to ensure personal safety and to prevent damage to the equipment.

(1) Step one is to disengage the load. When it is time to wrap up the operation, every one is in a hurry. Dropping the load removes power from the camp and reduces the possibility of electrical shock.

(2) Allow the unit to run for several minutes after the load has been dropped. This allows the engine and the generator assembly to cool off.

(3) Turn down the voltage and RPMs, if possible, to help the cooling process.

(4) After the unit has cooled down, place the master switch into the off position to stop the engine, then pull out the DC circuit breaker so that the batteries are disconnected from the circuits, and also turn the dead crank switch to the off position.

e. Once the shut down steps are accomplished, the last step is to perform the after operation checks, as applicable, ensuring that there are no leaks and that the equipment is serviced and ready for use again.

4. PREVENTIVE MAINTENANCE:

a. Regular and systematic preventive maintenance helps ensure that power generation equipment operates as required at all times. Preventive maintenance is important because it prevents defects before they cause serious damage or equipment failure.

b. Power Generation Equipment Preventive Maintenance.

(1) Personnel should always refer to the Operator's Manual for the Preventive Maintenance Services required for a specific piece of equipment. We are going to discuss preventive maintenance as it applies to all power generation equipment in general.

(2) A systematic preventive maintenance program should consist of inspecting, cleaning, servicing, lubricating, and adjusting on a regular basis.

(3) The preventive maintenance performed on power generation equipment can be broken down into four systems: lubrication, cooling, fuel and electrical.

(a) Lubrication: Inspect for leaks around the crank case and check crank case breather. Ensure the oil in the crankcase is at the proper level. Inspect the oil filter for leaks and loose or missing mounting hardware. Inspect oil lines for leaks, breaks, or wear. Ensure that oil filters are serviced as directed in the lubrication order.

(b) Cooling System: Inspect the radiator, grille, and shutter for leaks, loose mounting, or obstructions in air passages. Check all lines and connections for leaks. Inspect all hoses for signs of deterioration and loose connections. The cooling system should be protected to the proper freezing point. If the coolant is contaminated ensure that the system is drained, flushed, and refilled. Inspect manual shutter controls to see if they operate properly. Inspect the water pump for cracks, leaks or other damage. Inspect the fan guard and fan for loose mounting. Inspect the fan drive belts for wear and proper tension. Inspect the thermostat housing for cracks.

(c) Fuel System: Inspect the fuel pump for leaks, damage, and loose or missing mounting hardware. Inspect the primary and secondary fuel filters for cracks, leaks or loose or missing hardware. Ensure that fuel filters are being serviced as required by the technical manual. Inspect the fuel tank for leaks. Inspect the fuel strainer for dirt, wear and defects. Inspect fuel lines and fittings for cracks, leaks, and loose or damaged connections.

(d) Electrical System: Inspect the batteries for cracks, leaks, dirt and corroded or damaged cables and terminals. Check the electrolyte level. Inspect engine starter connection and wiring for frayed and/or loose cables. Inspect electrical connections for corrosion and tightness. Inspect the panel lights for loose connections, loose mountings, and corrosion. Inspect all electrical wires in the engine and main generator for looseness, breaks and damaged or worn insulation. Inspect all switches for signs of damage, excessive wear, or other damage. Inspect the engine generator voltage regulator for external damage. Inspect the fuel, water, and oil pressure gauges for cracked or broken glass. Check all meters on the control panel such as the frequency, AC ammeter, AC voltmeter, and kilowatt meter for loose connections, cracked or broken glass. Inspect the fault indicator panel lights for damage. Inspect the voltage adjust rheostat for loose connections or other damage. Inspect the main generator for damage and ensure that it is free of dust and dirt. Ensure that the voltage reconnection board is properly mounted and there are no loose connections.

5. SAFETY PRECAUTIONS WHILE OPERATING POWER GENERATION EQUIPMENT: Installing and operating power generation and distribution equipment is hazardous work. As a supervisor you must ensure that equipment operators understand how protective equipment on the power generation and distribution equipment functions. Your operators must use safe work methods and use safety equipment properly. Remember that using unsafe work methods often results in loss of work time, partial or permanent disabilities or death.

a. Power Generation Equipment.

(1) The first safety precaution is to ensure that all power generation equipment operators are licensed operators for the equipment they are going to operate.

(2) Observe the power generation equipment to ensure that the equipment is grounded.

(3) Ensure that the operator physically inspects the power generation equipment set for fuel, oil, hydraulic and coolant levels and leaks.

(4) The operator should visually inspect the entire unit for missing, loose or damaged parts to ensure safe equipment operation.

(5) The operator should be wearing ear protectors when operating the equipment to avoid hearing loss.

(6) The operator should remove all jewelry and metal items before operating generator sets. Ensure that clothing has no exposed metal like zippers or buttons. Electrical contact with a metal object may cause severe burns.

(7) Metal objects such as tools and oilcans should be kept away from field magnets. Otherwise, they may be magnetized and drawn into moving parts or electric circuits.

(8) The operator should keep the work area and cables around electric power generation equipment as dry as possible to avoid serious shocks.

(9) When working on distribution equipment, ensure the circuit is open at the fuse box or circuit breaker.

(10) Operators should not be allowed to smoke around power generator equipment and should post no smoking signs.

(11) Fire extinguishers (provided in SL-3 Kit) should be present and in working condition.

(12) Ensure that the operator is aware that lethal voltages are present at the load terminal board on the generator set during operation.

(13) Ensure that the operator does not connect or disconnect power cables while the power generation equipment is in operation, or while the equipment is shut down but connected to an unprotected buss bar along with a back up generator which is in operation.

(14) The operator should always test the fault indicator panel on his power generation equipment to ensure that the actuation of any protective device will result in illumination of the corresponding indicator light.

(15) The operator must be aware that when working on or around equipment while it is in operation to utilize caution around belts and moving
parts.

6. INSTALLING/OPERATING THE FLOODLIGHT UNIT:

a. Over View of the Flood Light:

(1) The floodlight tower is a skid mounted unit designed to accept either a 10 KW, 60 Hz, MEP-003A generator set or external power with a minimum requirement of 6 KW, single phase, 3 wire, 120/240 volts at 60 Hz.

(2) When the floodlight tower is modified, it will also accept the MEP-803A.

(3) The unit has three 1,000-watt high intensity discharge (HID) metal halide floodlights, a telescoping tower and all accessories necessary for operation.

(4) The tower also has four re-locatable ground level lights requiring 500 watts each.

(5) The 1,000-watt lights are capable of being elevated 35 feet above ground. The entire tower with lights extended can rotate 360 degrees in either direction. The unit is also equipped with outrigger jacks for stability.

b. Extend the four outriggers and secure by tightening the outrigger thumbscrews and jam nuts.

c. Adjust the jacks to level the floodlight set and increase stability.

d. Remove the T-bar and attach it to the top section of the tower by sliding the T-bar mount tube into the tower. Secure the T-bar to the tower by tightening the three lock-bolts located in the tower.

e. Turn off all circuit breakers.

f. Remove the 1000-watt floodlights and secure the T-bar. Attach the floodlight plug connector to the tower lead assembly socket connector.

g. Connect each floodlight to the safety chain on the T-bar.

h. Remove the hitch pin and tower lock pin.

i. Operate the deck winch assembly until the tower guide pin is fully seated into the tower vertical lock. Install the tower lock pin and secure it with the hitch pin.

j. Loosen the tower swivel stop lock bolt. Rotate the tower with the swivel handle to the desired position and tighten the tower swivel stop lock bolt.

k. Unwind and remove the tower lead cable.

l. Using the tower winch, raise the tower to the desired height.

m. Ground the floodlight set prior to operation. This can be accomplished by either properly grounding the generator set, if installed, or by grounding the floodlight set itself. The ground can be any of the following in order of preference:

(1) An underground metallic water piping system

(2) A driven metal rod (stowed on skid).

n. Perform a during operation inspection.

(1) Tighten loose hardware.

(2) Inspect and service the engine generator set in accordance with Marine Corps TM-05684C-12, if in use.

(3) Inspect and service the M353 trailer chassis in accordance with Army TM 9-2330-247-14, if in use.

o. Energize the electrical power source.

p. Turn on the main breaker.

q. Turn on the floodlight breakers.

r. Loosen the tower swivel stop lock bolt. Rotate the tower to the desired position. Tighten the swivel stop lock bolt.

s. Shut down the floodlight tower set.

(1) Turn off the floodlight breakers and main power breakers. Do not simultaneously operate the on/off breakers. This must be done sequentially to allow the AC power supply system to absorb the transients, or damage to the equipment may result.

(2) Secure the electrical power source.

(3) Secure the floodlight set.

(4) Perform an after operation inspection.

7. FLOODLIGHT SAFETY PRECAUTIONS

a. Make sure the unit is on level ground.

b. Make sure the unit is on solid ground, not soft. We don't want the outriggers to sink.

c. Be sure the outriggers are out and securely locked into place.

d. Ground the unit. Safety is the #1 priority.

e. Be sure that all the safety pins and clips are locked in place when preparing the unit for travel.

f. Make sure all circuit breakers are in the off position before starting.

g. When using the 1000-watt HID light make sure they are safely chained to the T-Bar.

8. PREVENTIVE MAINTENANCE FOR THE FLOODLIGHT

a. Inspect the battery cables for corrosion and assure proper fit.

b. Inspect the AC and DC cables for breaks, cuts or defective insulation. Tighten loose hardware.

c. Inspect the wire rope assemblies for frays or other damage.

d. Inspect each unit for the correct quantity of component parts and accessories.

e. Inspect and service the engine generator set in accordance with Marine Corps TM-05684C-12, if in use.

f. Inspect and service the M353 trailer chassis in accordance with Army TM 9-2330-247-14, if in use.

g. Turn off all circuit breakers on the floodlight set control panel.

9. DUMMY LOAD OPERATING STEPS:

a. Dummy Load Overview:

(1) The Load Bank, Electrical, 100 KW, is a self-contained unit that needs no power source other than the generator undergoing testing. It is

forced air cooled by a 28 VDC motor. The dummy load may be quickly and readily mounted on a trailer for easy transportation. Because of the dummy load's rugged construction it is adaptable to either indoor or outdoor use.

(a) The unit contains all the necessary instruments, controls, and electrical power absorbing equipment needed for testing AC generators. Each phase of the generator is independently controlled and monitored by its own meters and switches. This enables you to test the generator in any degree of phase balance.

(b)The unit uses the power from the generator to furnish the control power. This control power is measured as part of the load. The control power is used to operate the indicators, fan, and protective relays.

(2) The dummy load is capable of testing both 400 and 60 hertz generators. It has a rating of 100 KW, 120/208 VAC or 240/416 VAC, 3 phase, 5 wire. It is essential that the operator visually inspect the frequency switch to ensure that it is in the proper position for the generator being tested. There is no automatic protection against incorrect frequency setup, and the unit could be seriously damaged.

(3) The dummy load is a small, compact unit compared to the job, which it performs. The unit weighs 807 pounds and is 36 inches wide, 41.75 inches high, and 52.25 inches long. The housing is made of steel with four lifting rings and four tie down rings.

(4) The 100 KW dummy load, model DE1-0001, manufactured by Bruce Industries and has two purposes. First, it provides a convenient means of applying an electrical load to a generator, with all the necessary instruments for the purpose of testing the generator. Second, the dummy load also simulates an actual field load for the purpose of seeing how the unit will perform.

b. Set up the dummy load in an area with plenty of airflow around the unit since it depends on fresh airflow for cooling. Make sure there is at least three feet of clear area around the rear and sides of the dummy load. In the front of the unit, where the resistive load and heating elements are, allow at least fifteen feet of air space. Remove any type of obstruction, which could stop the airflow or could re-circulate the hot exhaust. Never place the load bank on a slope greater than 15 degrees.

c. Once the unit has been properly located, connect it to the generator and perform the pre-operation checks.

(1) Open the control panel doors and latch them so they do not accidentally close and injure someone or damage the unit. After opening the door, thoroughly check the control panel for any damage, which might have occurred during shipping. Check the switches and ensure that they are all in the off position.

(2) Open the two air intake doors, one on either side of the unit.

Fold the lower half of the intake doors up into the access door and fold the access door down so that the air intake door is latched into place. Then move to the front of the unit and open the air exhaust door. Once again, make sure that it is attached in place to prevent it from accidentally closing. Be sure there is nothing blocking the front and side panels which would prevent the
dummy load from being properly cooled.

(3) Take a load cable or wire and connect the dummy load to the generator, which you want to test. Be sure the cable is rated at the maximum amperage, which you will be testing the generator for. If not, serious damage could be done to either the dummy load, the generator or yourself. When connecting the cable make sure the phase relationship is right: connect L1 on the generator to L1 on the dummy load, L2 to L2 and so forth.

(4) Drive a ground rod into the ground and connect the dummy load to the rod with a piece of #6 AWG wire. This is to protect you in case of a short circuit or an accidental ground. Ground the generator to the same ground rod.

(5) Preset the switches on the load bank.

(a) Set the input voltage selector switch to match the connection of the reconnection board on the generator. This will program the relays within the dummy load for 120/208-volt operation or 240/416 volt operation.

(b) Turn the control power source switch to the normal position. This means that the generator being tested will provide the power for the control circuits.

(c) On the top right of the front control panel is the frequency meter selection switch. Place it in either the 400 Hz or 60 Hz position so as to match the frequency of the test generator. Be sure that this switch is in the right position because there is no automatic protection against applying the wrong frequency, and the dummy load could be severely damaged.

d. You are now ready to start the dummy load and test the generator. First, it is necessary to start the generator set. Be sure to follow all the steps you learned during operations. Once the generator is running, place the load contactor switch in the "ON" position. If power is being supplied to the dummy load, the phase indicator lights on the control panel will come on.

(1) Place the unit master switch in the "ON" position and watch the phase sequence indicator lights. If the cables have been properly connected, the light marked "ABC" will illuminate. If the "CBA" light comes on, the phase connection is not right, and both units must be shut down and the load cable must be reconnected. If the input voltage and frequency

settings are the same as for the dummy load, the unit will operate and the fan motor will start within 3 to 15 seconds.

(2) Turn on the various load switches to achieve the degree of load that you wish to place on the generator. Pay close attention to the meters on the dummy load and the generator so that the load rating of the generator is not exceeded.

(3) Be sure to observe all the meters to ensure that the dummy load and generator operate smoothly. As when running any piece of equipment, listen for strange noises and be aware of unusual odors. If you notice any of these, shut down the equipment and have it inspected for malfunctions.

e. Load test the generator for a minimum of two hours. Often, malfunctions will not occur in the generator until it has been operated for several hours under a field load. If your shop load permits it, allow the generator to stay under a load for half a day. Never leave it alone for long periods of time and be sure to check it regularly. In any area where untrained Marines may come in contact with the equipment, mark the area so they know it is a danger area and leave it unattended only when necessary.

f. When ready to discontinue the testing operation, shut down the unit properly to prevent damage to the load bank, the generator, and the operator.

(1) Set all load control switches on the dummy load to the "OFF" position.

(2) Allow all fan motors to run for five minutes before putting the unit master switch to OFF.

(3) Shut down the generator according to the procedures you were taught previously.

(4) Disconnect all the leads, neatly coil them, and place the cables in the proper storage area. Do not allow them to lay around and create a safety hazard. Finally, close and latch all the doors. Double-check the doors for security to prevent accidents. Before leaving the area, check for equipment or materials you may have forgotten to pack such as the grounding rod and wire.

(5) The after operation services consist of cleaning the unit and ensuring that all the doors and panels are properly secured. Clean the unit thoroughly. Many of the malfunctions occurring in the dummy load are caused by dirt and improper cleaning.

g. The operating personnel are charged with the responsibility of performing the needed checks and services to operate and maintain the dummy load. If deficiencies are noted, stop operation as soon as possible; if within the scope of organizational maintenance, correct deficiencies and report disposition. If the unit is not operating properly, do not keep it in operation.

10. DUMMY LOAD COMPONENTS:

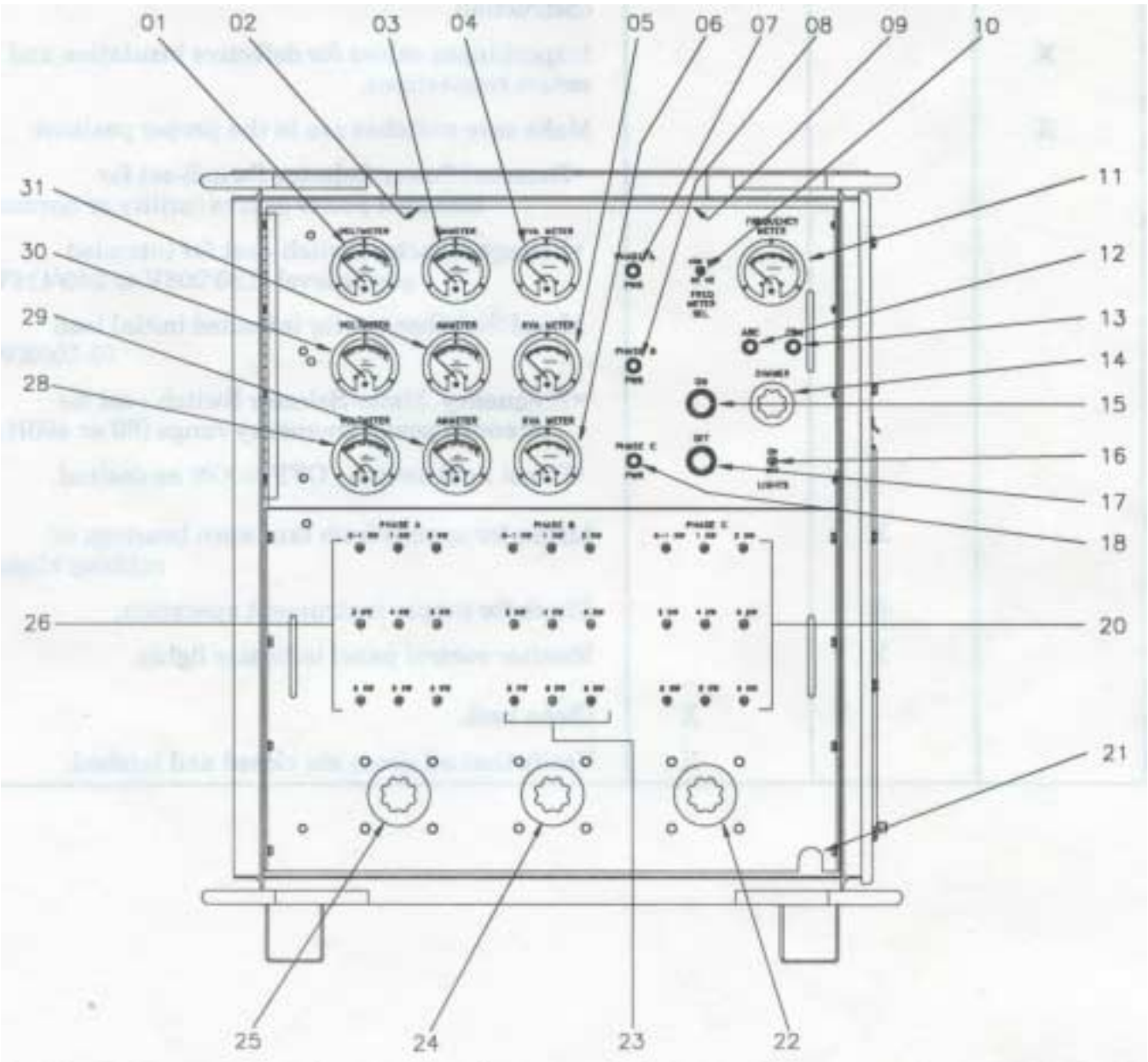

(1) Phase A Voltmeter: The AC Voltmeter measures the input voltage of phase “A” and is a dually scaled meter, measuring 0-150 volts and 0-300 volts.

(2) Lamp Housing: Illuminates the panel markings and controls for night operations.

(3) Phase A Ammeter: Displays the current on phase “A”. The AC Ammeter measures the current and has scale ranges of 0-150 amps and 0-300 amps.

(4) Phase A KVA Meter: Displays phase “A” apparent current. The meter measures the KVA and has scale of 0-40 KVA.

(5) Phase B KVA Meter: Displays phase “B” apparent current. The meter measures the KVA and has scale of 0-40 KVA.

(6) Phase C KVA Meter: Displays phase “C” apparent current. The meter measures the KVA and has scale of 0-40 KVA.

(7) Phase A Indicator: Indicates when power is applied to Phase A.

(8) Phase B Indicator: Indicates when power is applied to Phase B.

(9) Lamp Housing: Illuminates the panel markings and controls for night operations.

(10) Switch, Frequency Meter Selector: Selects either 60 HZ or 400 HZ to be displayed on the frequency meter.

(11) Frequency Meter: The Frequency Meter measures the input frequency and is dually scaled, measuring both 60 hertz and 400 hertz. The 60-hertz scale is ranged from 56-64 hertz, and the 400-hertz scale is ranged from 375-425 hertz. When checking the frequency, always go by the meter on the dummy load control panel, not the meter on the generator control panel.

(12) Phase Sequence Indicator Light ABC: The Phase Sequence Indicator Lights indicate whether the phase connection between the generator and the dummy load are correct. When properly connected, the light marked "ABC" will light up.

(13) Phase Sequence Indicator Light CBA: The Phase Sequence Indicator Lights indicate whether the phase connection between the generator and the dummy load are correct. If the connection is incorrect the light marked "CBA" will come on. You must then shut down both the generator and the dummy load in order to reconnect the load cable properly.

(14) Control Panel Lamp Rheostat: The Panel Lamp Rheostat is used primarily when in the field and operating at night under alert type conditions. It controls the brightness of the panel lights and is a rheostat, or variable resistor.

(15) Unit On Master Switch: The Unit Master Switch is a push button switch, which turns the dummy load on.

(16) Panel Light Switch: Used to turn the panel lights on or off.

(17) Unit Off Master Switch: The Unit Master Switch is a push button switch, which turns the dummy load off.

(18) Phase C Indicator: Indicates when power is applied to Phase C.

(19) NOT USED

(20) Load Switches Phase C:

a. The 1 KW Load Switch applies a fixed load of 1 KW to the generator. There is one switch for phase “C”.

b. The 2 KW Resistive Load Switch. There are two 2 KW load switches for phase “C” of the generator. Each switch is capable of applying a fixed resistive load of 2 KW.

c. The 4 KW Resistive Load Switch connects a 4 KW resistive load to the phase of the generator being tested. There is one switch for phase “C”.

d. The 6 KW Resistive Load Switch connects a 6 KW resistive load to the phase of the generator being tested. There are four of these toggle switches for phase “C”.

(21) Ground Rod: Used to ground the Dummy Load.

(22) Variable Transformer Load Control Phase C: The Variable Transformer Load Control works through a variable transformer. By adjusting the switch it is possible to place a 0-1 KVA/KW load on the generator. There is one for phase “C”.

(23) Load Switches Phase B:

a. The 1 KW Load Switch applies a fixed load of 1 KW to the generator. There is one switch for phase “B”.

b. The 2 KW Resistive Load Switch. There are two 2 KW load switches for phase “B” of the generator. Each switch is capable of applying a fixed resistive load of 2 KW.

c. The 4 KW Resistive Load Switch connects a 4 KW resistive load to the phase of the generator being tested. There is one switch for phase “B”.

d. The 6 KW Resistive Load Switch connects a 6 KW resistive load to the phase of the generator being tested. There are four of these toggle switches for phase “B”.

(24) Variable Transformer Load Control Phase B: The Variable Transformer Load Control works through a variable transformer. By adjusting the switch it is possible to place a 0-1 KVA/KW load on the generator. There is one for phase “B”.

(25) Variable Transformer Load Control Phase A: The Variable Transformer Load Control works through a variable transformer. By adjusting the switch it is possible to place a 0-1 KVA/KW load on the generator. There is one for phase “A”.

(26) Load Switches Phase A:

a. The 1 KW Load Switch applies a fixed load of 1 KW to the generator. There is one switch for phase “A”.

b. The 2 KW Resistive Load Switch. There are two 2 KW load switches for phase “A” of the generator. Each switch is capable of applying a fixed resistive load of 2 KW.

c. The 4 KW Resistive Load Switch connects a 4 KW resistive load to the phase of the generator being tested. There is one switch for phase “A”.

d. The 6 KW Resistive Load Switch connects a 6 KW resistive load to the phase of the generator being tested. There are four of these toggle switches for phase “A”.

(27) NOT USED:

(28) Phase C Voltmeter: The AC Voltmeter measures the input voltage of phase “C” and is a dually scaled meter, measuring 0-150 volts and 0-300 volts.

(29) Phase C Ammeter: Displays the current on phase “C”. The AC Ammeter measures the current and has scale ranges of 0-150 amps and 0-300 amps.

(30) Phase B Voltmeter: The AC Voltmeter measures the input voltage of phase “B” and is a dually scaled meter, measuring 0-150 volts and 0-300 volts.

(31) Phase B Ammeter: Displays the current on phase “B”. The AC Ammeter measures the current and has scale ranges of 0-150 amps and 0-300 amps.

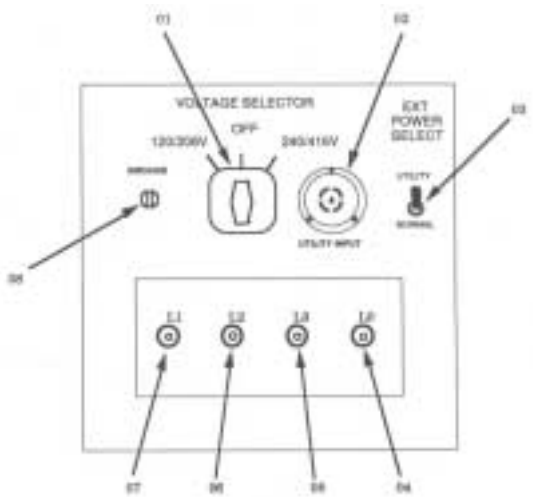

(1) Voltage Selector Switch: Used to set-up the dummy load to accept 120/208 VAC or 240/416 VAC power as required.

(2) Utility Input Connector: Used to power the internal fan. The power requirement for the input power is 120/208-5wire, 20amp.

(3) Switch External Power Selector: Selects cooling fan and load control power from internal power or external power source.

(4) Neutral Terminal Stud: Connection point for the neutral input line.

(5) Phase C Terminal Stud: Connection point for phase C input line.

(6) Phase B Terminal Stud: Connection point for phase B input line.

(7) Phase A Terminal Stud: Connection point for phase A input line.

(8) Ground Terminal Split Bolt: Connection point for the service ground.

11. SAFETY PRECAUTIONS

a. Always provide for adequate ventilation and unrestricted airflow around units.

b. Always have air intake and exhaust doors opened during operation.

c. Never attempt to bypass or block any protective control circuit.

d. Always lower the door louver above the input terminals.

e. The dummy load and the generator under test are to share the same physical earth ground point. That is, connect the ground cables from both the dummy load and from the generator to the same ground rod.

12. PREVENTIVE MAINTENANCE FOR THE DUMMY LOAD:

a. Service upon receipt of equipment: The Dummy Load should be completely inspected and cleaned as specified in 1-4, Servicing.

b. Preventive Maintenance Services (PMS): To make sure the dummy load is ready for operation at all times, it must be inspected systematically before, during and after operation. Defects discovered must be corrected before serious damage or failure result. Necessary Preventive Maintenance Services must be performed before operation. Defects discovered during operation of the unit must be noted for future correction. All defects are to be corrected as soon as the operation has ceased. Stop operation immediately if a deficiency noted during operation may damage the equipment if the operation is continued. After operation, services will be performed by the operator after every operating period and at intervals based on equipment use at normal operation level. Defects or unsatisfactory operating characteristics beyond the operator's scope to correct must be reported at the earliest opportunity to personnel responsible for