UNITED STATES MARINE CORPS
Utilities Instruction Company
Marine Corps Engineer School
PSC Box 20069
Camp Lejeune, North Carolina 28542-0069

U-10C05
OCT 99

STUDENT HANDOUT

FIELD SANITATION

Terminal Learning Objective: Provided tools, lumber, burlap, 55 gallon barrels, metal screening material, sand, gravel, and the references set up sanitation facilities. The sanitation facilities will be set up to function properly and, to pass medical inspection per the references. (1171.01.04)

Enabling Learning Objectives:

1. Given a list of waste disposal devices and a field situation, without the aid of references, select the correct disposal device in accordance with FM 21-10. (1171.01.04a)

2. Given a list of liquid disposal devices and a field situation, without the aid of references, select the correct disposal device in accordance with FM 21-10. (1171.01.04b)

3. Given a list of garbage disposal devices and a field situation, without the aid of references, select the correct disposal device in accordance with FM 21-10. (1171.01.04c)

BODY:

1. Medical importance of waste removal:

a. The promotion of good health is the responsibility of every Marine. Ignorance or indifference to the practice of military sanitation can counteract much of the combined efforts of many services working for the unit's welfare. It is imperative that every individual know and observe the rules of hygiene and sanitation, and adhere to the principles of good health and good living.

b. Large quantities of all types of waste, liquid and solid, are generated each day under field conditions. These wastes must be removed promptly and thoroughly; otherwise the camp or bivouac will quickly become an ideal breeding area for flies, rats, and other vermin. Filth-borne diseases such as dysentery (amebic and bacillary), typhoid, cholera, and plague could become prevalent.

c. The term waste includes all types of refuse resulting from the living activities of humans or animals. The following types of waste will be discussed:

(1) Human waste (feces and urine)

(2) Liquid wastes (wash, bath, and liquid kitchen wastes)

(3) Garbage

2. Waste disposal devices:

a. The devices most generally used for disposal of human waste in the field is dependent upon the length of stay, water level, soil condition, and location. Listed below are some of the devices available for disposing of human waste:

(1) Cat hole: When on the march, "cat holes" may be used during short halts. It is dug approximately 8 to 12 inches in diameter and 6 to 12 inches deep. It is completely covered and packed down after use.

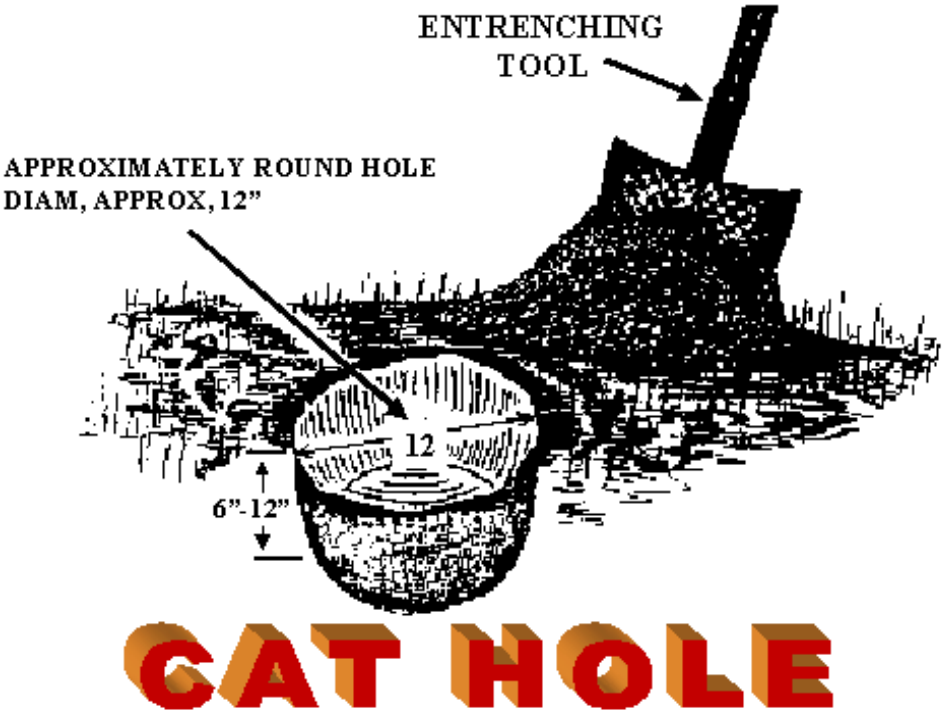

(2) Straddle trench: A temporary waste disposal device used in bivouac sites for 1 to 3 days. They are constructed in permanent camps and are used until more permanent facilities can be constructed. One straddle trench will serve 25 people and accommodate two people at a time. Additional trenches will be at least two feet apart. It is constructed to serve 4% of the males and 6% of the females at any given time. To construct a straddle trench, perform the following:

(a) Dig the straddle trench 1 foot wide, 2-1/2 feet deep, and 4 feet long.

(b) Dig the trenches at least two feet apart. There are no seats in this type of head, but you may place boards along both sides of the trenches to provide better footing.

(c) The removed earth is placed at the end of each trench and a shovel or paddle is provided so that each person can promptly cover their waste and toilet paper.

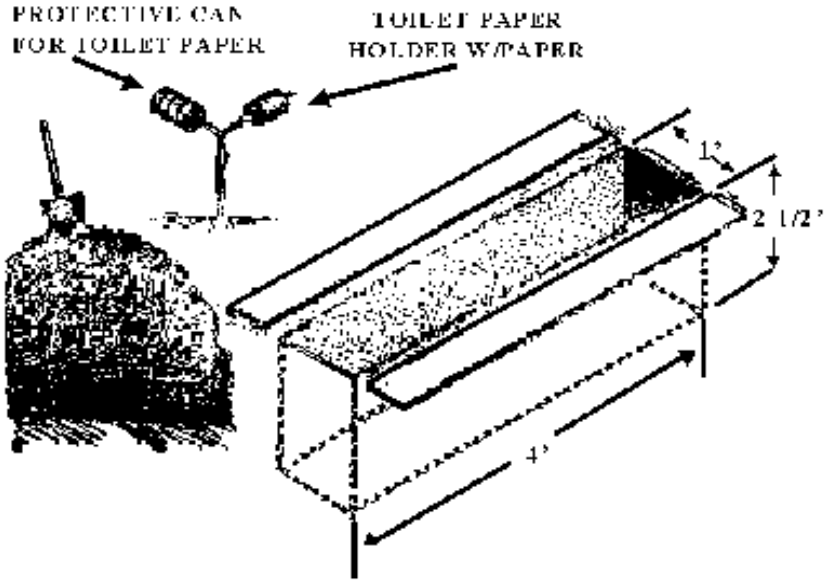

STRADDLE TRENCH 7

(3) Deep pit heads: A temporary waste disposal device that has a standard box with four seats built over a pit. One, four seat, deep pit head is required for every 50 people. It is used in temporary camps where the water table is low, stable soil conditions exist, and air pollution regulations prohibit the use of burning. It is constructed to serve 4% of the males and 6% of the females at any given time. To construct a deep pit head, perform the following:

(a) Dig the pit 2 feet wide and 7-1/2 feet long. This allows three inches of the earth surface on each side of the pit to support the box.

(b) The depth of the pit depends upon the estimated length of time the head is to be used. As a guide, allow a depth of one foot for each week of estimated use, plus two feet for dirt for cover, when it is to be closed.

(c) It is not generally desirable to dig the pit more than six feet deep because of the danger of the walls caving in. Rocks or a high water table may also limit the depth of the pit. In some soils, supports of planking or other material may be necessary to prevent the walls from caving in. Pack earth tightly around the bottom edges of the box to seal any openings through which flies could gain entrance.

(d) The deep pit box is a standard box with four seats and is 8 feet long and 2-1/2 feet wide at the base.

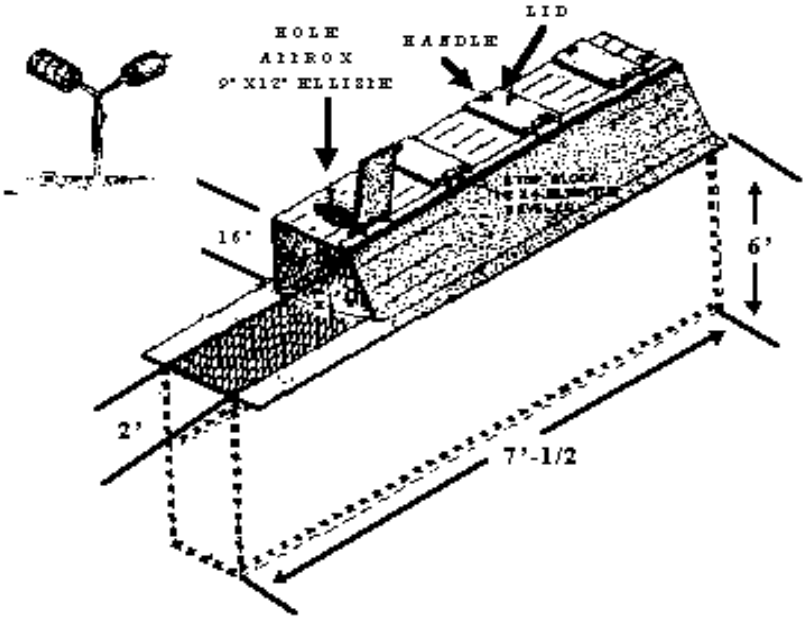

DEEP PIT HEAD[8]

(4) Burnout heads: A permanent waste disposal device that usually contain 2 to 4 seats built over 55 gallon drums that are cut in half. It is used in permanent camps or when the soil conditions are hard, frozen, or rocky, making digging difficult and where water tables are high. Burn-out heads should not be used when air pollution regulations prohibit open fires. A unit of 100 men, at least eight, 4 seat burnout heads are needed. To construct a burn-out head, perform the following:

(a) Place 55 gallon drums, that have been cut in half, into the ground leaving enough of the drum above the ground for a comfortable sitting height.

(b) Place a wooden seat with a fly proof, self-closing lid on top of the drum.

(c) Burn the head out daily by adding sufficient fuel to incinerate the fecal matter. Do not use highly volatile fuel such as gasoline or JP4 because of its explosive nature. A mixture of one quart of gasoline to five quarts of diesel fuel is effective but must be used with caution.

NOTE: All barrels will be "primed" with 3 inches of diesel fuel prior to placing them in service. This allows the fecal matter to become oil soaked enhancing complete thermal destruction of fecal matter during the daily (or more often if needed) burn out process. The oil also serves as an insect repellent and obnoxious odor deterrent.

(d) If the drum must be moved to another site before it can be burned out, weld handles to the sides of the drum to make it possible for two people to carry the drum with ease. Furthermore, it is convenient to have two sets of drums, one set for use while the other set is being burned clean. If the contents are not rendered dry and odorless by one burning, burn them again.

(e) Bury any remaining dry ash to a depth of 12 inches. Scattering ashes over ground surfaces is not recommended.

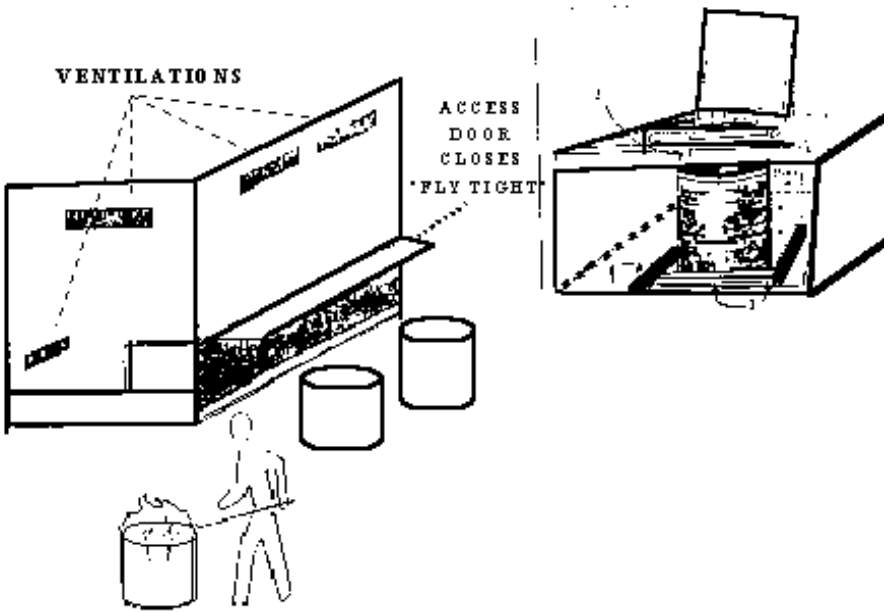

BURNOUT HEADS

(5) Pail heads: A permanent waste disposal device that usually contain 2 to 4 seats built over pails. It is used in permanent camps or when the soil conditions are hard, frozen, or rocky making digging difficult and where water tables are high. To construct a pail head, perform the following:

(a) Convert a standard latrine box with four seats to be built over pails by:

(1) Placing a hinged door on the rear of the box.

(2) Adding a floor.

(3) Placing a pail under each seat.

(b) Make the seats and the rear door self-closing and fly proof the entire box.

(c) A urinal may also be installed in the head enclosure with a drain pipe leading to a pail outside. Enclose this pail also in a fly proof box.

(d) Dispose of the waste in the pails by burning or by hauling the waste to a suitable burning area. The use of plastic bag liners for the pails reduce the risk of accidental spillage.

(e) Closely supervise the emptying and hauling of containers of waste to prevent careless spillage.

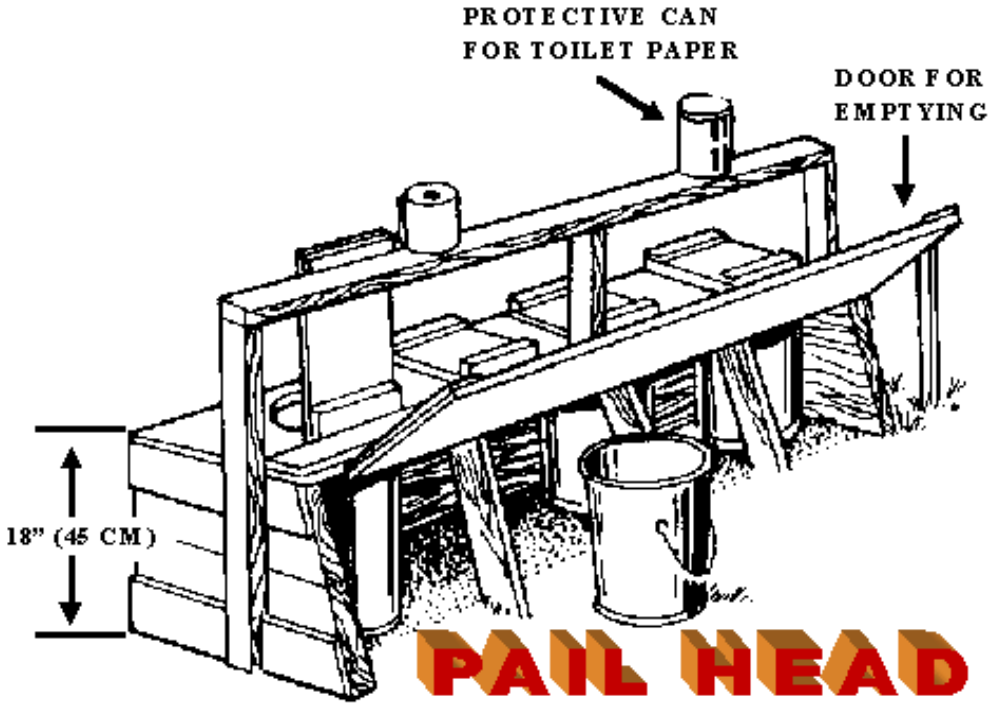

3. <u>Rules common to the maintenance and closing of heads</u>:

a. Rules Common to the Maintenance of Heads:

(1) Place canvas or brush screens around the heads or cover them with a tent over. In a cold climate heat the shelters if possible.

(2) To prevent surface water from flowing into the shelters, dig drainage ditches around them.

(3) In each head shelter, provide toilet paper on suitable holders with tin cans for protecting it from getting wet during inclement weather.

(4) Install hand wash outside of each head shelter. Keep the bags filled with water at all times so that individuals can wash their hands. There are many different types of items that can be used as hand wash station:

(a) Lister bags which hold 36 gallons of water.

59

(b) 5 gallon water containers.

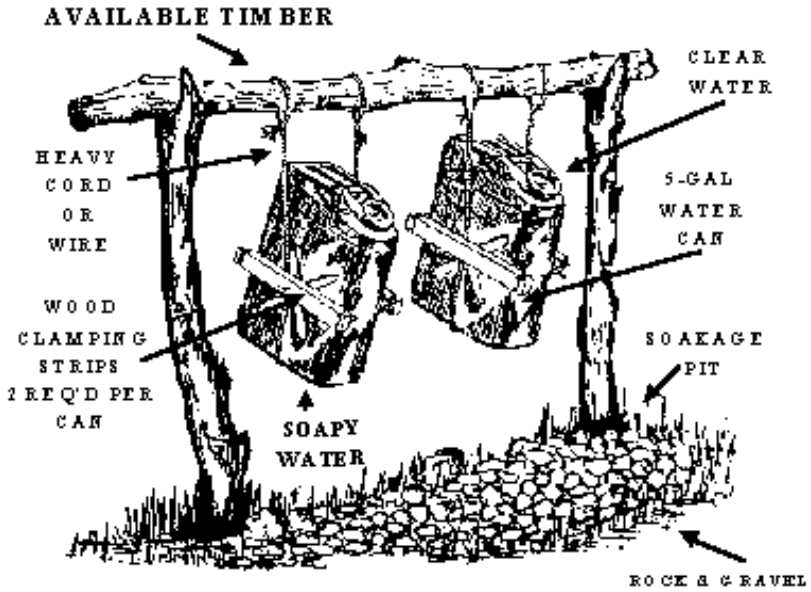

(c) An empty coffee can with hole punched in the bottom.

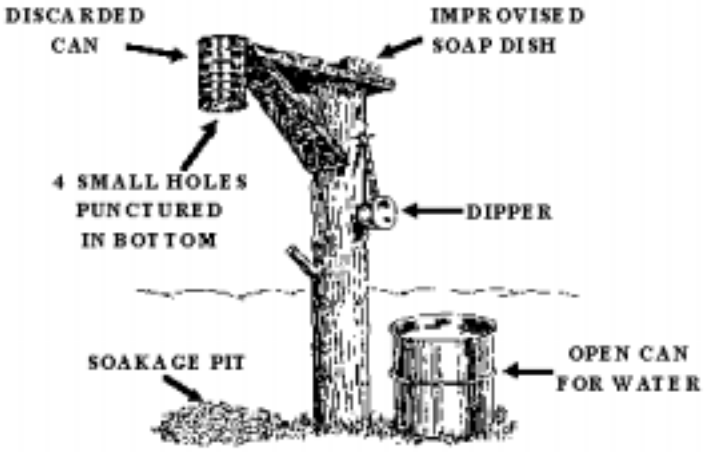

NOTE: Ensure a small soakage pit is dug underneath each hand wash station.

(5) At night, if the situation permits, keep the heads lighted.

(6) Sweep and scrub all surfaces of each head daily. Disinfect the seats and lids with a mild chlorine solution.

(7) Provide a convenient trash receptacle inside the head enclosures and empty it daily.

(8) Provide and maintain a cigarette butt can outside each head and empty it daily.

(9) Ensure that “NO SMOKING” is conspicuously posted both inside and outside the structure.

(10) Keep the lids on the head seats closed and all cracks sealed to control odor.

(11) Mark or number each head to facilitate cleaning and inspection.

(12) Maintain a good fly control program throughout the entire camp area to prevent fly breeding. Spray the pit contents twice weekly with a residual insecticide.

(13) Place a metal deflector inside the front of the box to prevent urine from soaking into the wood. The deflector may be made from flattened cans.

(14) It is sometimes desirable to install a vent stack in the more permanent pit head to release the moisture laden gases of decomposition, thus preventing condensation from forming on the inside of the self-closing lids which may come in contact with an individual’s back. Extend the vent

stack from the upper part of the pit to approximately six feet above the ground level. Screen the outside opening of the vent stack.

b. Rules common to the closing of heads:

(1) Using an approved residual insecticide, spray the pit contents, the side walls, and the ground surface extending two feet from the side walls.

(2) Fill the pit to the ground level with successive 3-inch layers of earth, packing each layer down before adding the next one; then mound the pit over with at least one foot of dirt and spray it again with insecticide. This prevents any fly pupa which may hatch in the closed head from getting out.

(3) When the tactical situation permits, place a rectangular sign on top of the mound which indicates the type of pit and the date closed as well as the unit designation in non-operational areas.

4. Urine waste disposal devices:

a. Are devices which are primarily used for the disposal of urine. Listed below are some of the most commonly used devices available for disposing of urine:

1. Urine Soakage Pit: A urine waste disposal device constructed in camps, most effective when used in sandy soils. To construct a urine soakage pit, perform the following:

(a) It is dug 4 feet square by 4 feet deep.

(b) This pit is filled to within 6 inches of ground level with any of the following materials; large rocks, flattened tin cans, broken bottles, rubble, bricks, or other suitable contact material.

(c) Ventilation shafts will be inserted into the pit to within 6 inches of the bottom. The shafts will extend 6 to 12 inches above ground level. This allows air to circulate through the pit and lessen odors.

(d) Six urine tubes, made of 1 inch by 36 inch pipe, are then inserted into the pit. The tubes are inserted, at a slight angle, about 8 inches below ground level, which leaves about 26 inches above ground level.

(e) A screened funnel, made of moisture proof material such as tar paper, is placed on the top of the tube.

(f) Tar paper is then spread over the pit and covered with 6 inches of compacted earth.

(g) Urine soakage pits should be able to accommodate at least five percent of the command at one time. One pipe will accommodate 20 men.

(h) In order for a urine soakage pit to function properly, the troops must not urinate on the surface of the pit. Clean the funnels daily with a chlorine solution and replace the funnels as necessary.

(i) When a urine soakage pit is to be abandoned or it becomes clogged, first spray it with a residual insecticide; then mound it over with a one foot covering of compacted earth marking it “URINE FACILITY CLOSED” and dated.

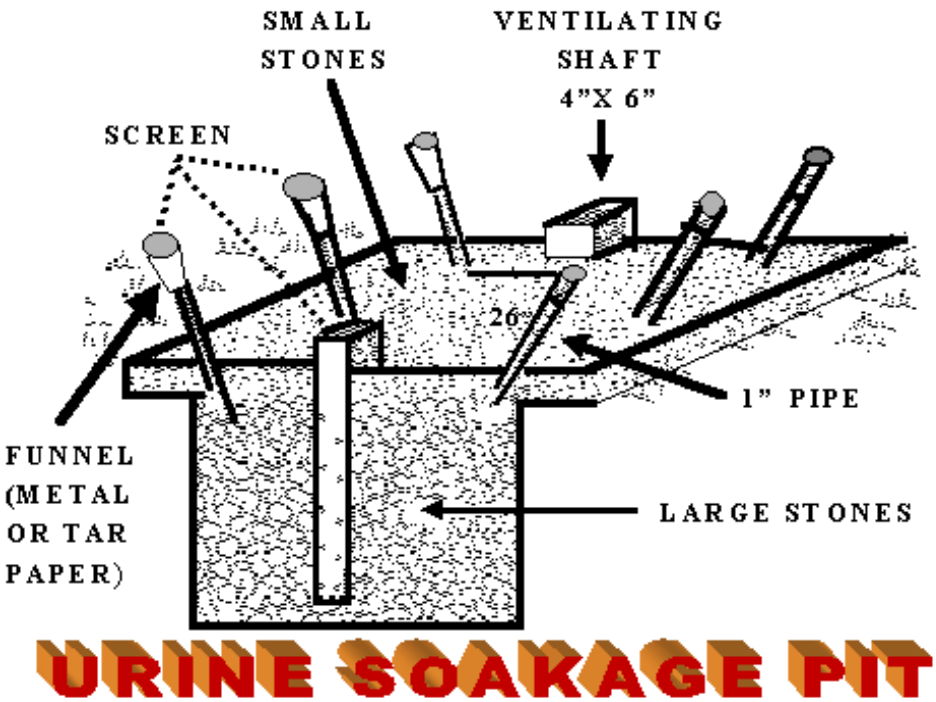

(2) Urine Troughs: A urine waste disposal device constructed in camps, when material for its construction is more readily available than pipes. To construct a urine trough, perform the following:

(a) Make a 10 foot long trough of sheet metal or wood with V or U shaped ends.

(b) If the trough is made of wood, line it with heavy tar paper or metal.

(c) Insert a splash board down the middle of the trough.

(d) A drain trough or pipe is attached to one end of the urine trough to drain into a soakage pit.

NOTE: The soakage pits for urine troughs are constructed identically to the urine soakage pits.

(e) Construct the urine trough so the side with the drain trough or pipe is slightly lower than the other to ensure proper drainage.

(f) One urine trough is designed to serve 100 men.

(g) When a urine trough is to be abandoned or it becomes clogged, first spray it with a residual insecticide; then mound the soakage

pit over with a one foot covering of compacted earth marking it “URINE FACILITY CLOSED” and dated.

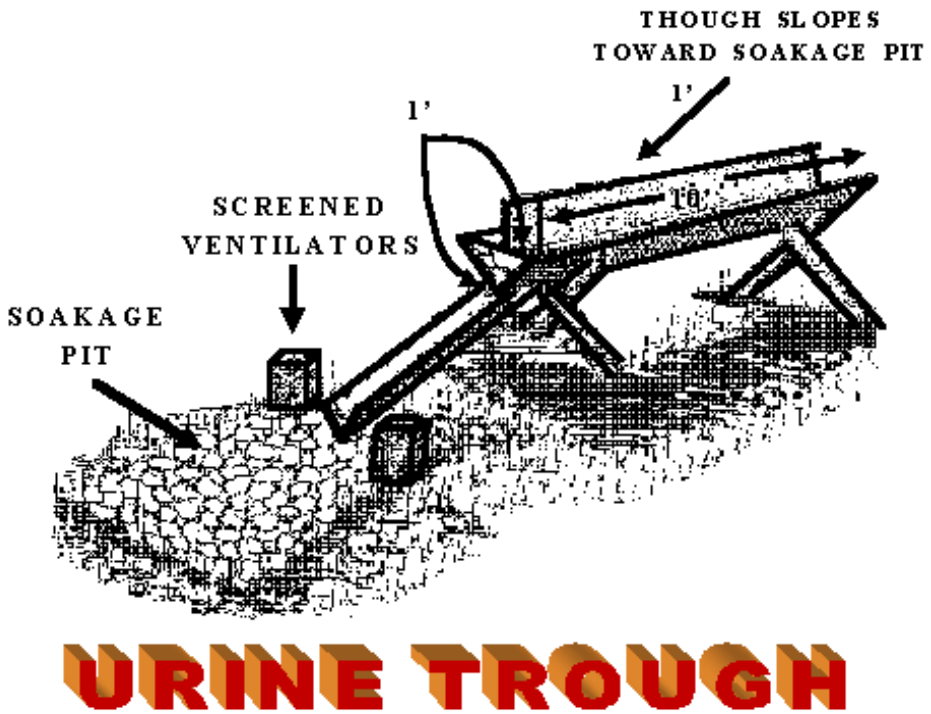

NOTE: When women are involved in the exercise, all urine disposal facilities will be constructed with enclosures for privacy.

4. Liquid disposal devices:

a. In the field, bathing, laundering, and liquid field mess waste (grease, soap) are disposed of in the soil by means of either a soakage pit or soakage trench. In order for the soil to absorb liquid field mess waste; the grease, scrap food, and other suspended solids, must first be removed. The most commonly used liquid waste disposal devices are:

(1) Soakage pits: Constructed like urine soakage pits (without the urine pipes). One pit will service a field mess serving 200 people or less. If the mess is to remain operational for two weeks or more, two pits will be constructed and used on alternating days to lessen the possibility of clogging. To construct a soakage pit, perform the following:

(a) It is dug 4 feet square by 4 feet deep.

(b) This pit is filled to within 6 inches of ground level with any of the following materials; large rocks, flattened tin cans, broken bottles, rubble, bricks, or other suitable contact material.

(c) Ventilation shafts will be inserted into the pit to within 6 inches of the bottom. The shafts will extend 6 to 12 inches above ground level. This allows air to circulate through the pit and lessen odors.

(d) Tar paper is then spread over the pit and covered with 6 inches of compacted earth.

(e) When a soakage pit is to be abandoned or it becomes clogged, first spray it with a residual insecticide; then mound it over with a one foot covering of compacted earth marking it “SOAKAGE PIT CLOSED” and dated.

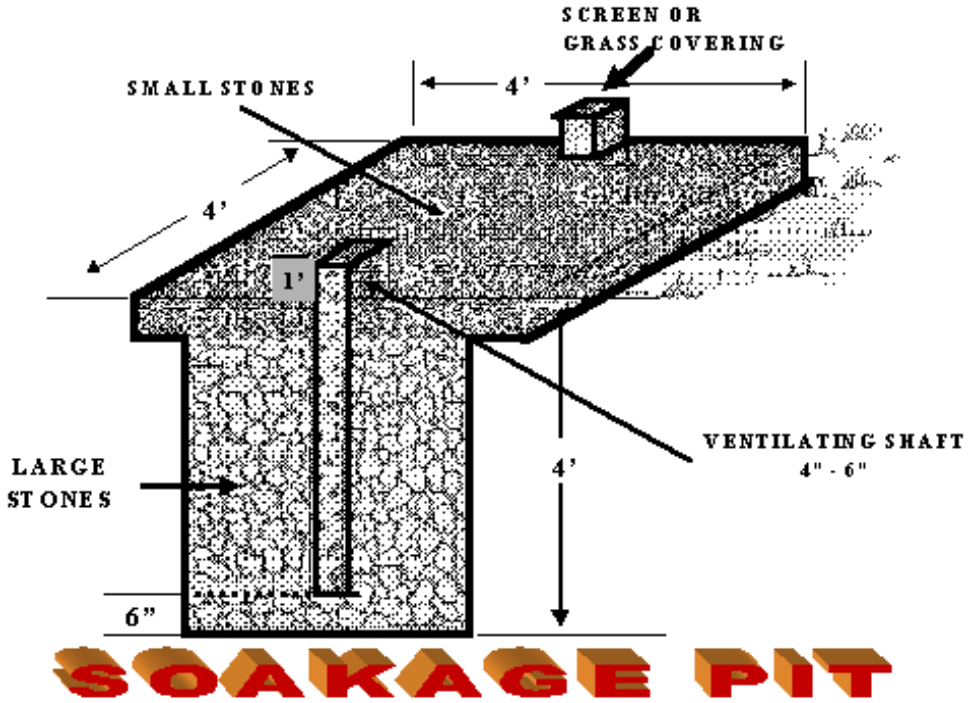

(2) Soakage Trenches: Use soakage trenches when the ground water level or a rock formation prevents the construction or use of a soakage pit. To construct a soakage trench, perform the following:

(a) Dig a central pit which is two feet square and one foot deep. A trench is dug outward from each side of the pit.

(b) The trench should be at least 6 feet long, 1 foot wide, and 1 foot deep at the end nearest the pit with a gradual downward slope to 1-1/2 feet deep at the end farthest away from the pit.

(c) Fill the pit and trenches with the same materials used in a soakage pit. Build two such units for every 200 people and use them on alternate days.

(d) If soakage trenches are required for laundry or shower facilities, build one unit for each facility provided.

(e) Soakage trenches are closed in the same manner as a soakage pit.

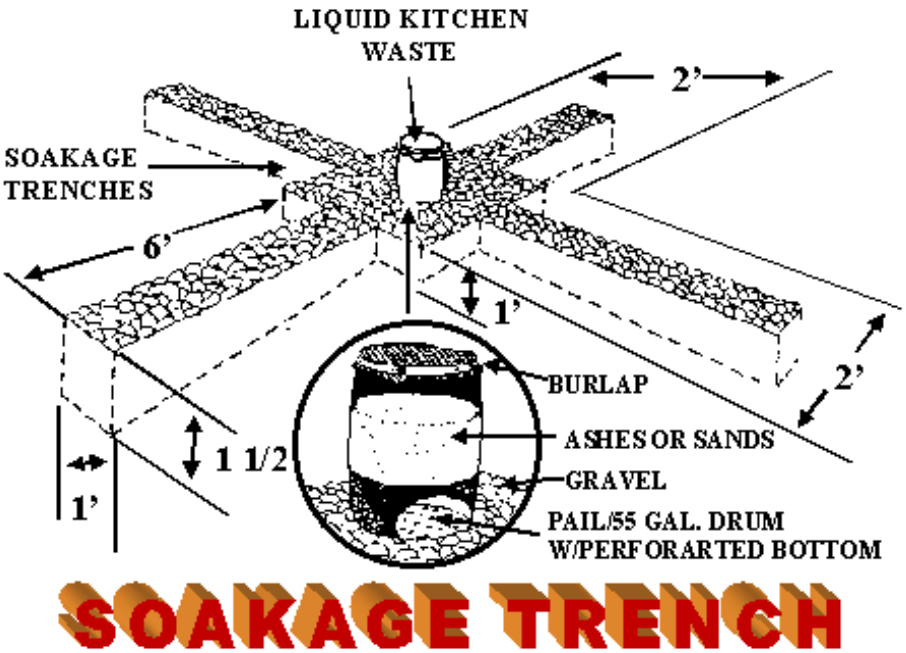

(3) Evaporation Beds: Use evaporation beds when heavy clay soil prevents the use of standard soakage pits. Beds are constructed to allow 3 square feet of evaporation area per person, per day for field mess waste and 2 square feet per person, per day, for bathing waste. To construct an evaporator bed, perform the following:

(a) An 8 foot by 10 foot rectangle is marked off.

(b) The top soil is scraped and used to form a ditch around the perimeter of the bed. The bed is then spaded to a depth of 10 to 15 inches and raked into a series of ridges and depressions with the ridges about 6 inches higher than the depressions.

(c) During operation, one bed is flooded with liquid wastes to the top of the ridges during the day. This is equivalent to an average depth of 3 inches over the bed.

(d) Allow the liquid waste to evaporate and percolate. After three or four days this bed is usually sufficiently dry for re-spading and reforming. Flood the other beds on successive days and follow the same sequence of events.

(e) Give careful attention to proper rotation, maintenance, and dosage of evaporation beds. Each bed is constructed in the same manner and spaced so that the wastes can be easily distributed to any one of the beds.

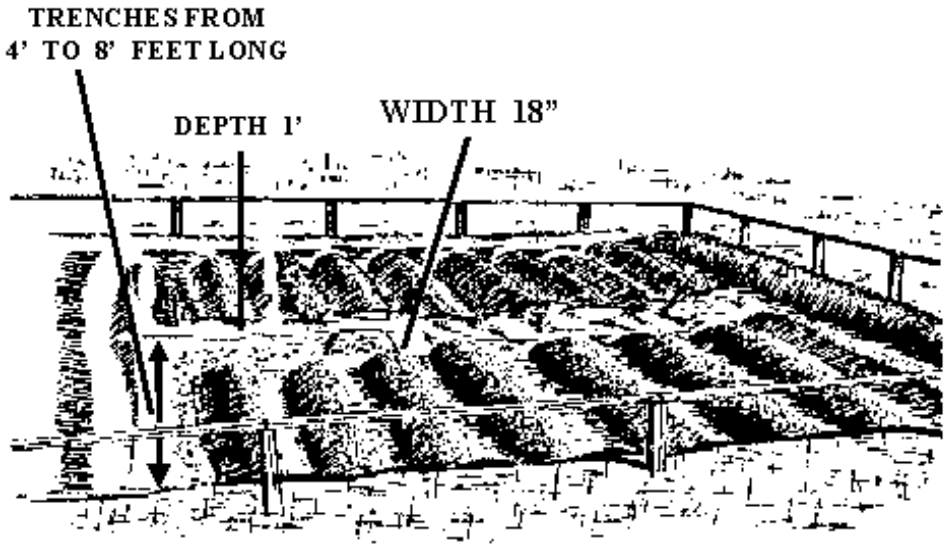

EVAPORATOR BED 38

(4) Grease Traps: Must be constructed between the field mess and each soakage pit, trench, or evaporation bed. The following are two types of grease traps:

(a) Filter Grease Trap: May be constructed from a 55 gallon drum which has the top removed and the bottom perforated. To construct a filter grease trap, perform the following:

1 Place the barrel directly in the center of the soakage pit or trench about two inches below ground level.

2 Fill a 55 gallon drum two thirds full with three layers of material.

a Place eight inches of crushed rock or large gravel in the bottom.

b Add 12 inches of progressively smaller gravel in the middle.

c Add 6 inch layer of sand, ash charcoal or straw on the top.

3 Fasten a piece of burlap to the top of the barrel to strain out the larger pieces of debris.

4 The internal filtering material is removed, buried, and replaced at least once a week. The burlap is removed daily, burned or buried, and replaced with a clean piece

5 A pail strainer may be used instead of the burlap filter. It is made by boring holes in the bottom of an old metal pail or can and filling it with grass or straw. This strainer will remove particles of food and a small part of the grease. Place it on top of the filter grease trap.

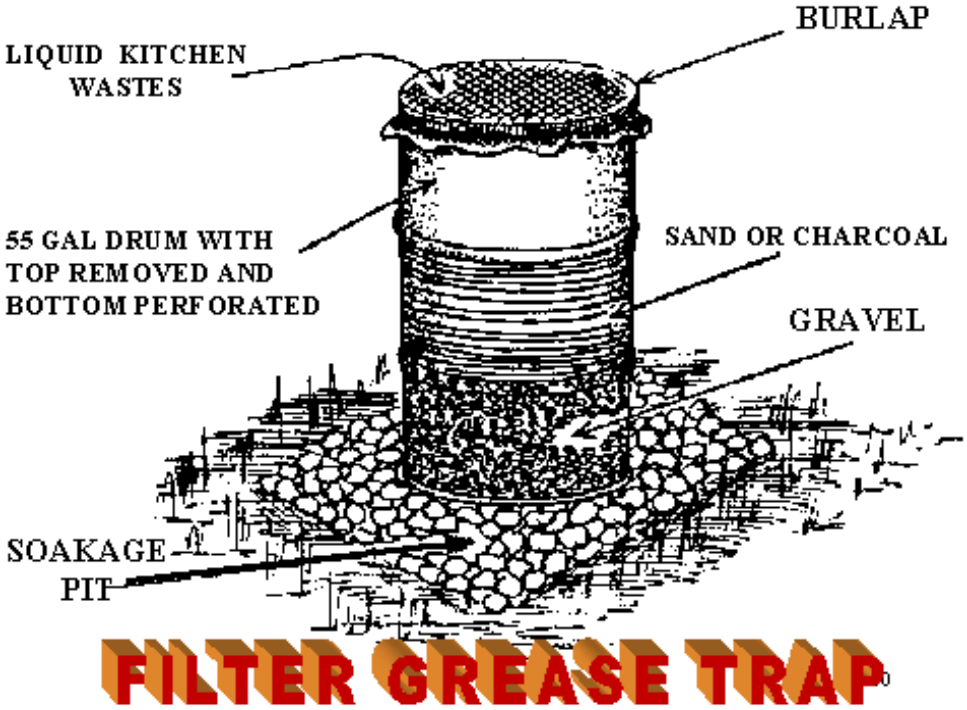

(b) Baffle Grease Trap: The most effective device for removing grease. To construct a baffle grease trap, perform the following:

1 It consist of a watertight container divided into three equal sized chambers by hanging baffles.

2 The lower edge of the first baffle hangs to within 1 inch of the bottom of the container.

3 The second baffle hangs to a point half the depth of the box.

4 An outlet pipe (2″ diameter) is inserted 6 to 8 inches below the upper edge of the last (exit) chamber and extends outward to the center of and 1 foot below the surface of a soakage pit or trench. The outlet pipe may also terminate in an evaporation bed.

5 The liquid waste is strained before it flows into the entrance chamber of the trap.

6 Before the trap is put into service, it is filled with cool water. The cool water causes the grease to solidify and rise to the

surface where the baffle prevents it from reaching the outlet and flowing into the soakage area.

7 The trapped grease is skimmed from the first (entrance) and second chamber at least daily and buried.

8 The trap must be emptied and scrubbed with hot, soapy water as necessary to keep it operating efficiently.

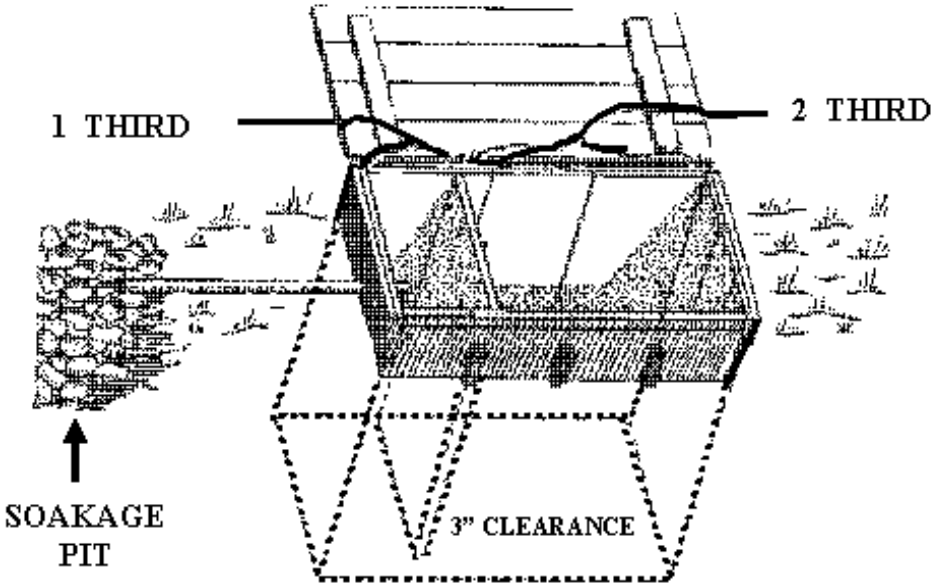

BAFFLE GREASE TRAP

5. Garbage disposal devices:

a. Garbage is solid or semisolid wet waste resulting from the preparation, cooking, and serving of food. It is disposed of by burial or incineration.

b. Noncombustible garbage (can, bottles, metal objects) is either buried or hauled to a suitable disposal site. In either case, the tactical situation must be considered before proceeding. The two methods of disposing of garbage most commonly used in the field are:

(1) Burial: When troops are on the march, in bivouacs or temporary camps for less than one week, garbage is disposed of by burial in pits or trenches.

(a) Pits are preferred for burying garbage during halts. They consist of a four foot square pit that is four feet deep that is suitable for serving 100 people per day.

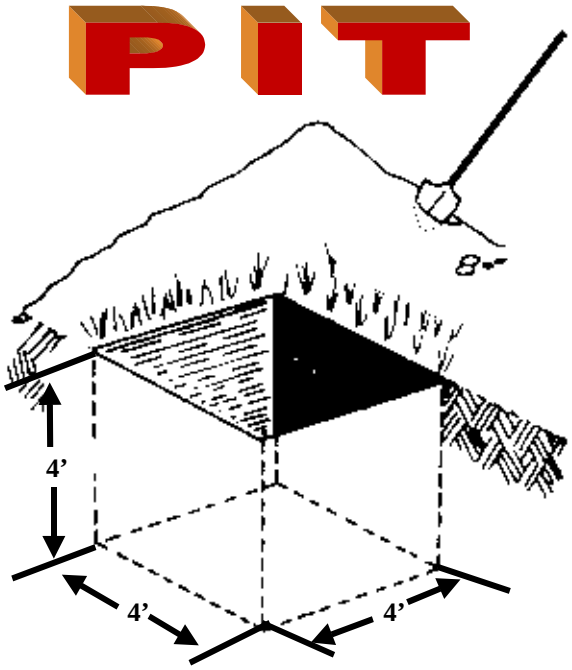

3

1 When the pit is filled with garbage to within one foot from the top, fill it with earth, and mound it over with an additional foot of dirt. Mark and date the pit closed.

(b) Continuous trench is used for stays of 2 days or more. To construct a continuous trench, perform the following:

1 Dig the trench two feet wide, four feet deep, and long enough to accommodate the garbage for the first day.

2 When the first section is full, not more than one foot from the top, it is covered and mounded. Another section is dug to accommodate the next day's garbage. This process can be repeated indefinitely.

3 It must be buried at least 100 feet away from any natural water source and from the field mess.

(2) Incineration: The garbage disposal method that is often used in camps that will be occupied for 1 week or more. Wet materials will not burn easily and tends to disrupt the incinerator air draft. Therefore, it is necessary to separate the liquids from the solids. This is done by straining the garbage with a coarse strainer such as an old bucket or 55 gallon drum with holes punched in the bottom. The liquid is run through a grease trap and into a soakage pit. The solids are incinerated at least 50 yards downwind from the camp area and away from flammables. There are two methods for burning garbage:

(a) Inclined plane incinerator will handle the garbage disposal of an entire battalion, evacuation hospital, or other units of similar size. Their effectiveness in combustion and the fact that they are somewhat protected from rain or wind makes them excellent improvised devices. To construct an inclined plane incinerator, perform the following:

1 Begin constructing the inclined plane incinerator by inserting a sheet metal plate through telescoped 55 gallon drums from which the ends have been removed.

2 The drums are then laid on an incline.

3 The metal plane is extended approximately two feet beyond the upper end of the inclined drums and serves as a loading or stoking platform.

4 A grate is placed at the lower end of the inclined drum/plane mechanism.

5 Make a wood or fuel oil fire under the grate.

6 After the incinerator becomes hot, drained garbage is placed on the stoking platform.

7 As the garbage becomes dry, it is pushed down the plane in small amounts and burned on the grate.

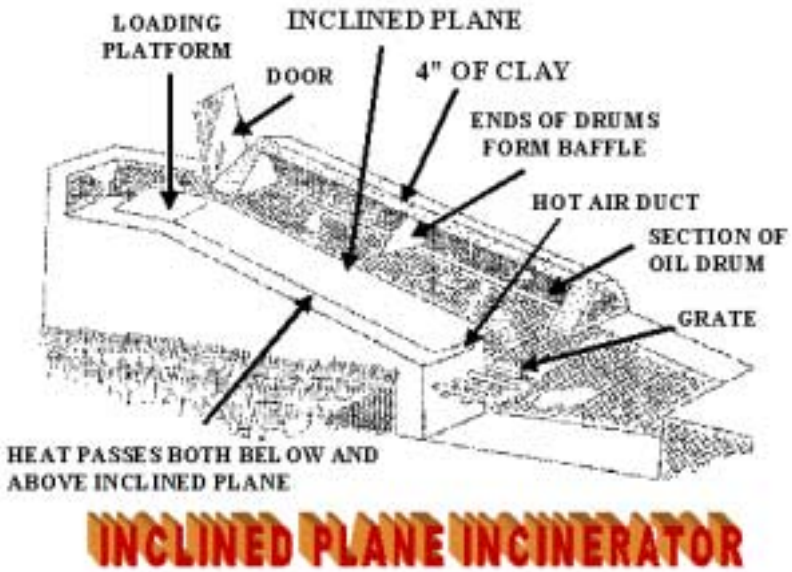

INCLINED PLANE INCINERATOR

(b) Barrel incinerator: The garbage disposal method that is most commonly used in camps where the length of stay is over one week. It is made from a 55-gallon drum. It will handle the garbage disposal of an entire battalion, evacuation hospital, or other unit of similar size depending on the number of 55 gallon drums used. To construct an inclined plane incinerator, perform the following:

1 Cut out both ends of a 55 gallon drum, punching many holes near the bottom, and inserting metal rods or small pipes through the

barrel, several inches above the holes. (The metal rods serve as a grate while the punched holes allow for air draft)

2 Support the barrel several inches above the ground on stones, bricks, or dirt filled cans thus allowing space to build a fire under the barrel.

3 Drained garbage is added in small amounts and burned. The garbage is put into the barrel on the top grate.

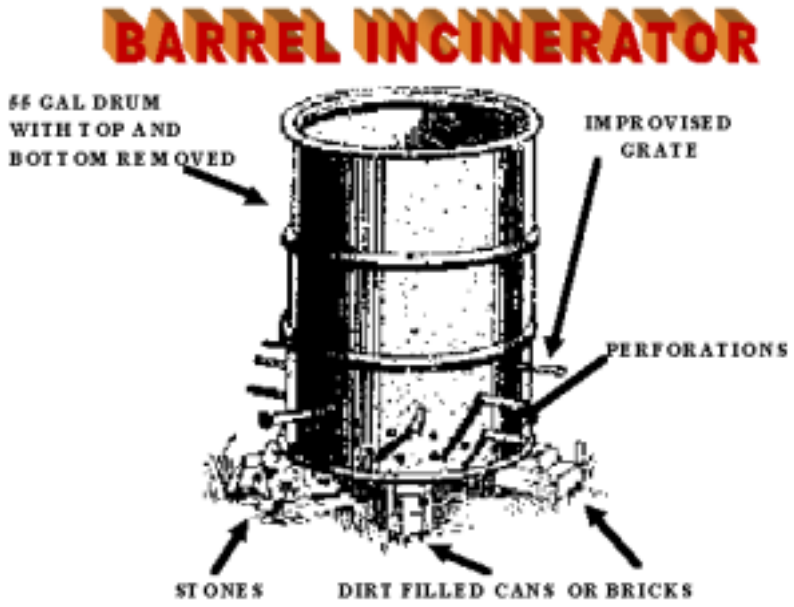

REFERENCES:

FM 21-10